2 MACHINE AND FIXTURE ELEMENTS

	Product group	Page
	Spring Plungers	49
	Index Plungers / Index Bolts	96
	Lateral Spring Plungers	144
	Locking Elements	174
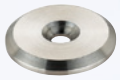	Shaft / C-Washers	178
	Lifting Pins / Threaded Lifting Pins	181
	Ball Lock Pins	202
	Grub Screws / Thrust Pads	255
	Mounting Pads / Fulcrum Screws	260
	Support Legs	266
	Locating and Seating Elements	273
	Ball Elements / Push Plungers	295
	Self-Aligning Pads	315
	Ball Casters	322
	Retrieval Systems	329
	Oil-Sight Glasses	340
	Expander® Sealing Plugs	341
	Swing Bolts	353
	Rod Ends	355

2

SPRING PLUNGERS

METRIC MODELS

CALCULATION OF THE INDEXING RESISTANCE

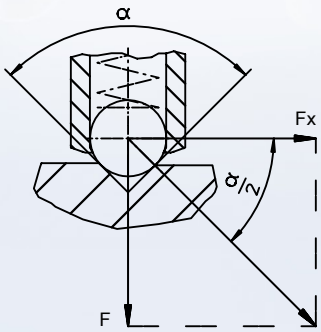

$$Fx = \frac{F}{\tan \frac{\alpha}{2}}$$

Sample calculation for:
α = 60°, Fx = 1,732 x F
α = 90°, Fx = F
α = 120°, Fx = 0,577 x F

standard spring load

heavy spring load

www.halder.com/
SpringPlungers-Video

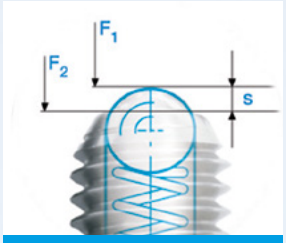

CERTIFIED

Certified spring load F1 and F2 and stroke s.

PREMIUM QUALITY

First-rate quality and minimum wear thanks to the use of hardened pins.

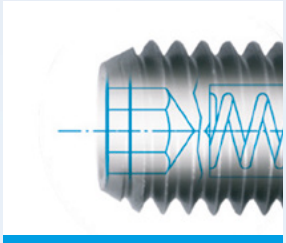

SECURE

Outstanding functional reliability thanks to - among other things - the assembly procedure used and a specific manufacturing process.

CLEAR

Coherent, uniform and clearly visible identification of the spring load thanks to a permanent marking on the body.

Spring Plungers • with ball and internal hexagon

EH 22030.

PRODUCT DESCRIPTION

Spring plungers can be used for locating or for applying pressure, as a detent or for ejection.

Material

Body
- Free cutting steel, blackened
- Stainless steel 1.4305

Ball
- Ball-bearing steel, hardened
- Stainless steel, hardened

Spring
- Stainless steel

Characteristic

Standard spring load: no marking
Reinforced spring load: marked with two lines

Standard spring load

Heavy spring load

MORE INFORMATION

Notes

Special types on request.
Spring plungers are specially tested for spring range and forces.

References

Thread lock on request, please refer to appendix - Technical Data - Calculation of indexing resistance, see details at the start of the section.

DRAWING

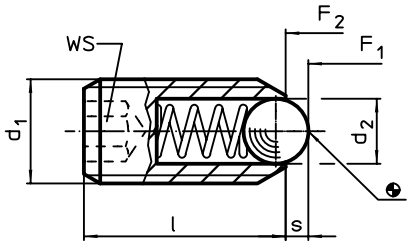

ORDER INFORMATION

Dimensions			WS	Stroke s	Spring load[1]				Art. No.
d_1	d_2	l			F_1 ~	F_2 ~	max.		
[mm]			[mm]	[mm]	[N]		[°C]	[g]	
free cutting steel, standard spring load									
M 3	1,5	8	1,5	0,4	3,0	4,5	250	0,3	22030.0003
M 4	2,5	12	2,0	0,8	8,5	14,0	250	0,7	22030.0004
M 5	3,0	14	2,5	0,9	8,0	14,0	250	1,2	22030.0005
M 6	3,5	15	3,0	1,0	11,0	18,0	250	1,8	22030.0006
M 8	4,5	18	4,0	1,5	18,0	31,0	250	3,9	22030.0008
M10	6,0	23	5,0	2,0	24,0	45,0	250	8,1	22030.0010
M12	8,0	26	6,0	2,5	26,0	49,0	250	13,0	22030.0012
M16	10,0	33	8,0	3,5	41,0	86,0	250	32,0	22030.0016
M20	12,0	43	10,0	4,5	56,0	111,0	250	66,0	22030.0020
M24	15,0	48	12,0	5,5	81,0	151,0	250	106,0	22030.0024
free cutting steel, heavy spring load									
M 4	2,5	12	2,0	0,8	12,0	18,0	250	0,7	22030.0044
M 5	3,0	14	2,5	0,9	15,0	22,0	250	1,2	22030.0045
M 6	3,5	15	3,0	1,0	19,0	28,0	250	1,8	22030.0046
M 8	4,5	18	4,0	1,5	36,0	62,0	250	4,1	22030.0048
M10	6,0	23	5,0	2,0	57,0	104,0	250	8,2	22030.0050
M12	8,0	26	6,0	2,5	61,0	110,0	250	13,0	22030.0052
M16	10,0	33	8,0	3,5	68,0	142,0	250	32,0	22030.0056
M20	12,0	43	10,0	4,5	84,0	166,0	250	66,0	22030.0060
M24	15,0	48	12,0	5,5	127,0	237,0	250	105,0	22030.0064

[1] statistical average value

→

2

Dimensions			WS	Stroke s	Spring load[1]				Art. No.
d_1	d_2	l			F_1 ~	F_2 ~	max.		
[mm]			[mm]	[mm]	[N]		[°C]	[g]	
stainless steel, standard spring load									
M 3	1,5	8	1,5	0,4	3,0	4,5	250	0,2	22030.0203
M 4	2,5	12	2,0	0,8	8,5	14,0	250	0,8	22030.0204
M 5	3,0	14	2,5	0,9	8,0	14,0	250	1,3	22030.0205
M 6	3,5	15	3,0	1,0	11,0	18,0	250	1,9	22030.0206
M 8	4,5	18	4,0	1,5	18,0	31,0	250	4,1	22030.0208
M10	6,0	23	5,0	2,0	24,0	45,0	250	8,2	22030.0210
M12	8,0	26	6,0	2,5	26,0	49,0	250	13,0	22030.0212
M16	10,0	33	8,0	3,5	41,0	86,0	250	32,0	22030.0216
M20	12,0	43	10,0	4,5	56,0	111,0	250	67,0	22030.0220
M24	15,0	48	12,0	5,5	81,0	151,0	250	107,0	22030.0224
stainless steel, heavy spring load									
M 4	2,5	12	0,8	2,0	12,0	18,0	250	0,8	22030.0244
M 5	3,0	14	2,5	0,9	15,0	22,0	250	1,2	22030.0245
M 6	3,5	15	3,0	1,0	19,0	28,0	250	1,9	22030.0246
M 8	4,5	18	4,0	1,5	36,0	62,0	250	4,2	22030.0248
M10	6,0	23	5,0	2,0	57,0	104,0	250	8,2	22030.0250
M12	8,0	26	6,0	2,5	61,0	110,0	250	13,0	22030.0252
M16	10,0	33	8,0	3,5	68,0	142,0	250	33,0	22030.0256
M20	12,0	43	10,0	4,5	84,0	166,0	250	66,0	22030.0260
M24	15,0	48	12,0	5,5	127,0	237,0	250	107,0	22030.0264

[1] statistical average value

APPLICATION EXAMPLE

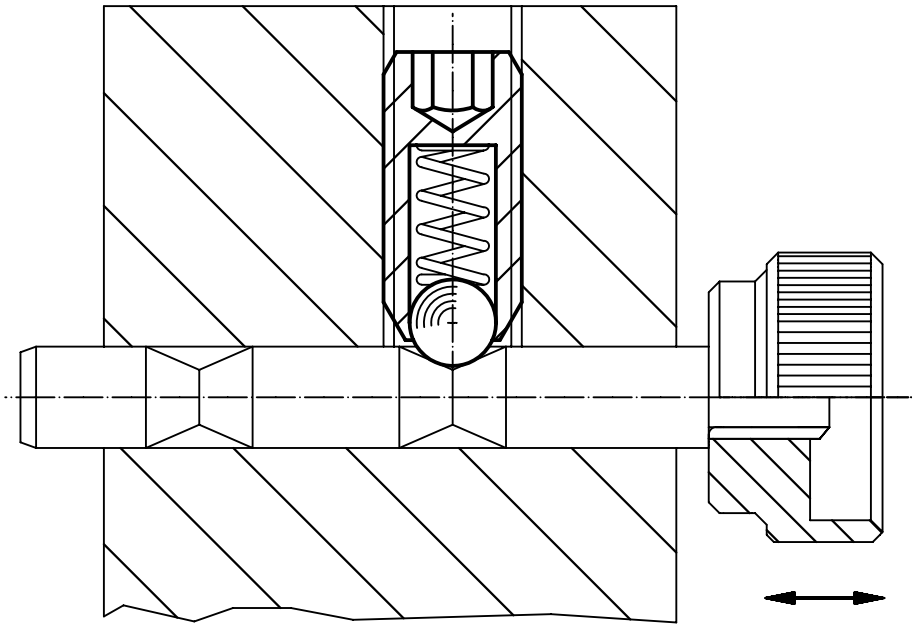

Spring Plungers • with pin and internal hexagon

EH 22030.

PRODUCT DESCRIPTION

Spring plungers can be used for locating or for applying pressure, as a detent or for ejection.

Material

Pin
- Free cutting steel, hardened, blackened
- Stainless steel 1.4305

Body
- Free cutting steel, blackened
- Stainless steel 1.4305

Spring
- Stainless steel

Characteristic

Standard spring load: no marking
Reinforced spring load: marked with two lines

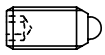

Standard spring load

Heavy spring load

MORE INFORMATION

Notes

Special types on request.
Spring plungers are specially tested for spring range and forces.

References

Thread lock on request, please refer to appendix - Technical Data -

DRAWING

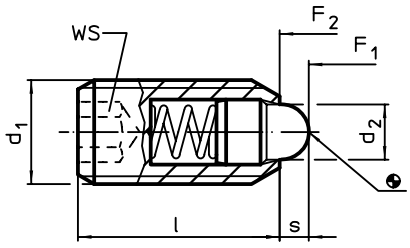

ORDER INFORMATION

Dimensions			WS	Stroke s	Spring load[1]				Art. No.
d_1	d_2	l			F_1 ~	F_2 ~	max.		
[mm]			[mm]	[mm]	[N]		[°C]	[g]	
free cutting steel, standard spring load									
M 4	1,8	12	2,0	1,5	4,5	12,5	250	0,6	22030.0104
M 5	2,4	14	2,5	2,0	5,0	13,0	250	1,3	22030.0105
M 6	2,7	15	3,0	2,0	6,0	17,0	250	1,9	22030.0106
M 8	3,8	18	4,0	2,0	16,0	33,0	250	4,2	22030.0108
M10	4,5	23	5,0	2,5	19,0	42,0	250	8,5	22030.0110
M12	6,2	26	6,0	3,5	22,0	57,0	250	13,0	22030.0112
M16	8,5	33	8,0	4,5	38,0	78,0	250	32,0	22030.0116
M20	10,0	43	10,0	6,5	39,0	81,0	250	67,0	22030.0120
M24	13,0	48	12,0	8,0	72,0	155,0	250	106,0	22030.0124
free cutting steel, heavy spring load									
M 6	2,7	15	3,0	2,0	11,0	25,0	250	2,0	22030.0146
M 8	3,8	18	4,0	2,0	23,0	59,0	250	4,2	22030.0148
M10	4,5	23	5,0	2,5	20,0	54,0	250	8,5	22030.0150
M12	6,2	26	6,0	3,5	38,0	96,0	250	13,0	22030.0152
M16	8,5	33	8,0	4,5	50,0	100,0	250	32,0	22030.0156
M20	10,0	43	10,0	6,5	52,0	133,0	250	67,0	22030.0160
M24	13,0	48	12,0	8,0	91,0	223,0	250	106,0	22030.0164

[1] statistical average value

→

2

Dimensions			WS	Stroke s	Spring load[1]		max.		Art. No.
d_1	d_2	l			F_1 ~	F_2 ~			
[mm]			[mm]	[mm]	[N]		[°C]	[g]	
stainless steel, standard spring load									
M 4	1,8	12	2,0	1,5	4,5	12,5	250	0,7	22030.0304
M 5	2,4	14	2,5	2,0	5,0	13,0	250	1,2	22030.0305
M 6	2,7	15	3,0	2,0	6,0	17,0	250	2,1	22030.0306
M 8	3,8	18	4,0	2,0	16,0	33,0	250	4,2	22030.0308
M10	4,5	23	5,0	2,5	19,0	42,0	250	8,6	22030.0310
M12	6,2	26	6,0	3,5	22,0	57,0	250	13,0	22030.0312
M16	8,5	33	8,0	4,5	38,0	78,0	250	32,0	22030.0316
M20	10,0	43	10,0	6,5	39,0	81,0	250	67,0	22030.0320
M24	13,0	48	12,0	8,0	72,0	155,0	250	104,0	22030.0324
stainless steel, heavy spring load									
M 6	2,7	15	3,0	2,0	11,0	25,0	250	1,9	22030.0346
M 8	3,8	18	4,0	2,0	23,0	59,0	250	4,4	22030.0348
M10	4,5	23	5,0	2,5	20,0	54,0	250	8,6	22030.0350
M12	6,2	26	6,0	3,5	38,0	96,0	250	14,0	22030.0352
M16	8,5	33	8,0	4,5	50,0	100,0	250	32,0	22030.0356
M20	10,0	43	10,0	6,5	52,0	133,0	250	68,0	22030.0360
M24	13,0	48	12,0	8,0	91,0	223,0	250	105,0	22030.0364

[1] statistical average value

APPLICATION EXAMPLE

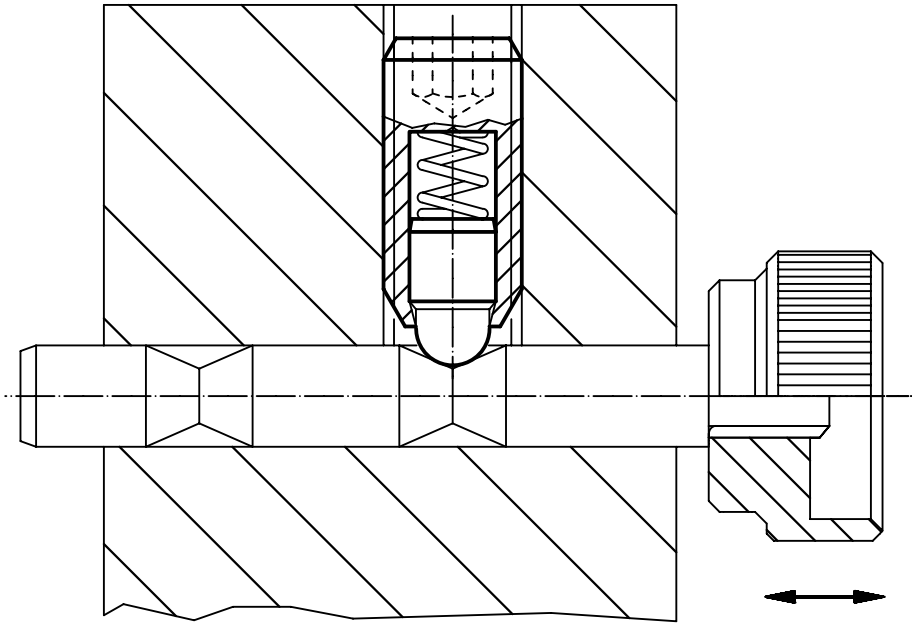

Spring Plungers • headed, with ball and internal hexagon

EH 22030.

PRODUCT DESCRIPTION

Spring plungers can be used for locating or for applying pressure, as a detent or for ejection. Precise screwing depth due to head.

Material

Body
- Free cutting steel, blackened
- Stainless steel 1.4305

Ball
- Ball-bearing steel, hardened
- Stainless steel, hardened

Spring
- Stainless steel

Assembly

Respect dimension l_3 for M 4 / M 5.

Characteristic

Standard spring load: no marking
Reinforced spring load: marked with two lines

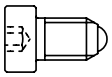

Standard spring load

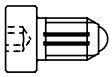

Heavy spring load

MORE INFORMATION

Notes

Special types on request.
Spring plungers are specially tested for spring range and forces.

References

Thread lock on request, please refer to appendix - Technical Data -
Calculation of indexing resistance, see details at the start of the section.

DRAWING

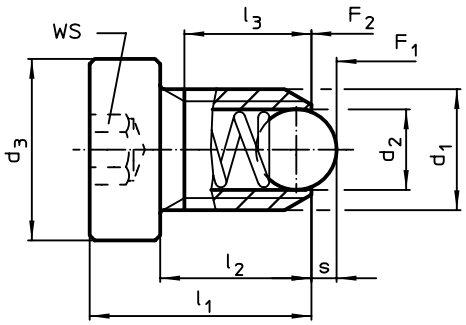

Size M4+M5

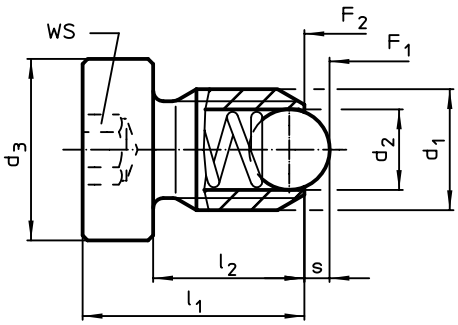

Size M6–M12

ORDER INFORMATION

Dimensions						WS	Stroke s	Spring load[1]				Art. No.
d_1	d_2	d_3	l_1	l_2	l_3			F_1 ~	F_2 ~	max.		
[mm]						[mm]	[mm]	[N]		[°C]	[g]	
free cutting steel, standard spring load												
M 4	2,5	6	12	9,0	7,5	2,0	0,8	8,0	14,0	250	1,0	22030.0930
M 5	3,0	8	14	10,0	8,2	2,5	0,9	8,0	14,0	250	2,3	22030.0931
M 6	3,5	10	15	10,0	–	3,0	1,0	11,0	18,0	250	3,9	22030.0932
M 8	4,5	13	18	12,5	–	4,0	1,5	18,0	31,0	250	7,7	22030.0933
M10	6,0	16	23	17,0	–	5,0	2,0	24,0	45,0	250	14,0	22030.0934
M12	8,0	18	26	19,0	–	6,0	2,5	26,0	49,0	250	21,0	22030.0935
free cutting steel, heavy spring load												
M 4	2,5	6	12	9,0	7,5	2,0	0,8	12,0	18,0	250	1,0	22030.1040
M 5	3,0	8	14	10,0	8,2	2,5	0,9	15,0	22,0	250	2,3	22030.1050
M 6	3,5	10	15	10,0	–	3,0	1,0	19,3	26,6	250	3,9	22030.1060
M 8	4,5	13	18	12,5	–	4,0	1,5	36,0	60,5	250	7,7	22030.1080
M10	6,0	16	23	17,0	–	5,0	2,0	57,0	103,5	250	14,0	22030.1100
M12	8,0	18	26	19,0	–	6,0	2,5	61,0	110,0	250	21,0	22030.1120

[1] statistical average value

→

2

Dimensions						WS	Stroke s	Spring load[1]				Art. No.
d_1	d_2	d_3	l_1	l_2	l_3			F_1 ~	F_2 ~	max.		
[mm]						[mm]	[mm]	[N]		[°C]	[g]	
stainless steel, standard spring load												
M 4	2,5	6	12	9,0	7,5	2,0	0,8	8,0	14,0	250	1,1	22030.0940
M 5	3,0	8	14	10,0	8,2	2,5	0,9	8,0	14,0	250	2,3	22030.0941
M 6	3,5	10	15	10,0	–	3,0	1,0	11,0	18,0	250	3,9	22030.0942
M 8	4,5	13	18	12,5	–	4,0	1,5	18,0	31,0	250	7,8	22030.0943
M10	6,0	16	23	17,0	–	5,0	2,0	24,0	45,0	250	14,0	22030.0944
M12	8,0	18	26	19,0	–	6,0	2,5	26,0	49,0	250	21,0	22030.0945
stainless steel, heavy spring load												
M 4	2,5	6	12	9,0	7,5	2,0	0,8	12,0	18,0	250	1,1	22030.2040
M 5	3,0	8	14	10,0	8,2	2,5	9,0	15,0	22,0	250	2,3	22030.2050
M 6	3,5	10	15	10,0	–	3,0	1,0	19,3	26,6	250	3,9	22030.2060
M 8	4,5	13	18	12,5	–	4,0	1,5	36,0	60,5	250	7,8	22030.2080
M10	6,0	16	23	17,0	–	5,0	2,0	57,0	103,5	250	14,0	22030.2100
M12	8,0	18	26	19,0	–	6,0	2,5	61,0	110,0	250	21,0	22030.2120

[1] statistical average value

APPLICATION EXAMPLE

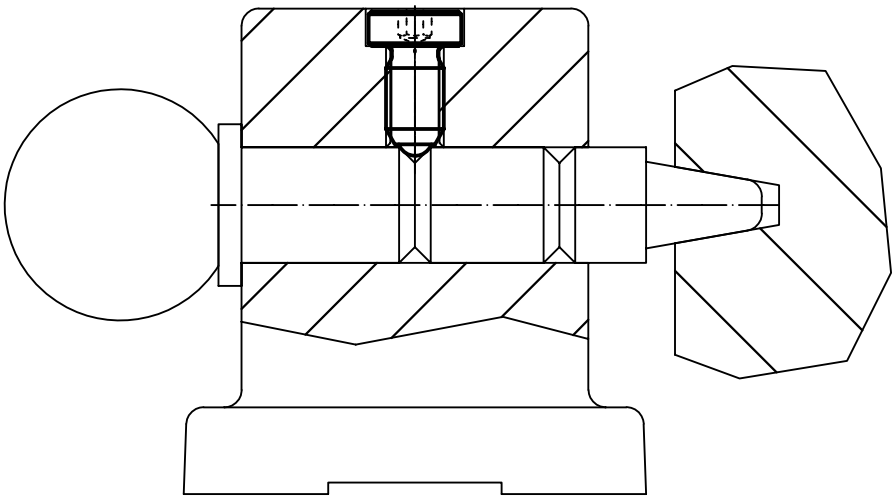

Spring Plungers • with moveable ball and internal hexagon

EH 22031.

PRODUCT DESCRIPTION

Spring plungers can be used for locating or for applying pressure, as a detent or for ejection. The running of the ball minimises wear on the counterpart, this also results in a positive locking behaviour depending on the counterpart.
Plastic balls offer electric insulation.

Material

Body
- Free cutting steel, blackened
- Stainless steel 1.4305

Bearing
- Plastic

Ball
- Ball-bearing steel, hardened
- Stainless steel, hardened

Spring
- Stainless steel

Characteristic

Standard spring load: no marking
Reinforced spring load: marked with two lines

Standard spring load

Heavy spring load

MORE INFORMATION

Notes

Special types on request.
Spring plungers are specially tested for spring range and forces.

References

Thread lock on request, please refer to appendix - Technical Data -
Calculation of indexing resistance, see details at the start of the section.

DRAWING

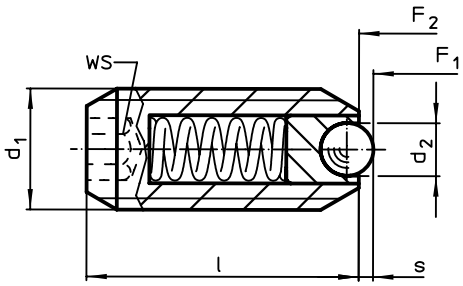

ORDER INFORMATION

Dimensions d_1 [mm]	d_2 [mm]	l [mm]	WS [mm]	Stroke s [mm]	Spring load[1)] F_1 ~ [N]	F_2 ~ [N]	min. [°C]	max. [°C]	[g]	Art. No.
free cutting steel, standard spring load										
M 5	2,0	14	2,5	0,50	4,8	6,8	-30	90	1,1	22031.0005
M 6	2,5	15	3,0	0,70	6,3	10,0	-30	90	2,1	22031.0006
M 8	3,5	18	4,0	0,95	16,0	24,0	-30	90	4,8	22031.0008
M10	4,5	23	5,0	1,40	18,8	31,7	-30	90	10,0	22031.0010
M12	6,5	26	6,0	2,50	24,0	49,0	-30	90	15,0	22031.0012
M16	8,5	33	8,0	3,10	38,0	68,0	-30	90	37,0	22031.0016
free cutting steel, heavy spring load										
M 5	2,0	14	2,5	0,50	10,0	14,0	-30	90	1,2	22031.0045
M 6	2,5	15	3,0	0,70	11,0	16,0	-30	90	2,2	22031.0046
M 8	3,5	18	4,0	0,95	23,0	40,0	-30	90	5,0	22031.0048
M10	4,5	23	5,0	1,40	28,0	54,3	-30	90	10,0	22031.0050
M12	6,5	26	6,0	2,50	36,5	77,3	-30	90	15,0	22031.0052
M16	8,5	33	8,0	3,10	50,0	88,7	-30	90	37,0	22031.0056

[1)] statistical average value

→

2

Dimensions			WS	Stroke s	Spring load[1]					Art. No.
d_1	d_2	l			F_1 ~	F_2 ~	min.	max.		
[mm]			[mm]	[mm]	[N]		[°C]		[g]	
stainless steel, standard spring load										
M 5	2,0	14	2,5	0,50	4,8	6,8	-30	90	1,1	**22031.0205**
M 6	2,5	15	3,0	0,70	6,3	10,0	-30	90	2,1	**22031.0206**
M 8	3,5	18	4,0	0,95	16,0	24,0	-30	90	4,8	**22031.0208**
M10	4,5	23	5,0	1,40	18,8	31,7	-30	90	10,0	**22031.0210**
M12	6,5	26	6,0	2,50	24,0	49,0	-30	90	15,0	**22031.0212**
M16	8,5	33	8,0	3,10	38,0	68,0	-30	90	37,0	**22031.0216**
stainless steel, heavy spring load										
M 5	2,0	14	2,5	0,50	10,0	14,0	-30	90	1,2	**22031.0245**
M 6	2,5	15	3,0	0,70	11,0	16,0	-30	90	2,2	**22031.0246**
M 8	3,5	18	4,0	0,95	23,0	40,0	-30	90	5,0	**22031.0248**
M10	4,5	23	5,0	1,40	28,0	54,3	-30	90	10,0	**22031.0250**
M12	6,5	26	6,0	2,50	36,5	77,3	-30	90	15,0	**22031.0252**
M16	8,5	33	8,0	3,10	50,0	88,7	-30	90	37,0	**22031.0256**

[1] statistical average value

APPLICATION EXAMPLE

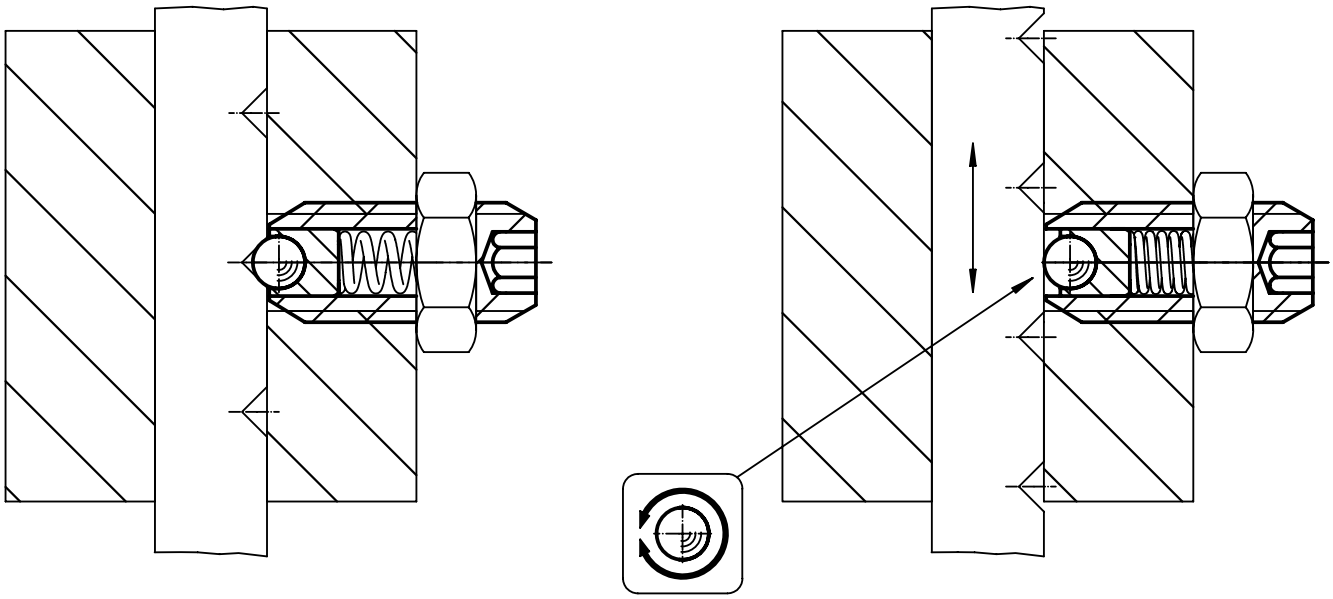

Spring Plungers • plastic

EH 22040.

PRODUCT DESCRIPTION

Spring plungers can be used for locating or for applying pressure, as a detent or for ejection.

Material

Body
- Thermoplastic POM, blue

Ball
- Stainless steel, hardened
- Thermoplastic POM, white

Spring
- Stainless steel

MORE INFORMATION

Notes

Special types on request.
Spring plungers are specially tested for spring range and forces.

References

Thread lock on request, please refer to appendix - Technical Data - Calculation of indexing resistance, see details at the start of the section.

DRAWING

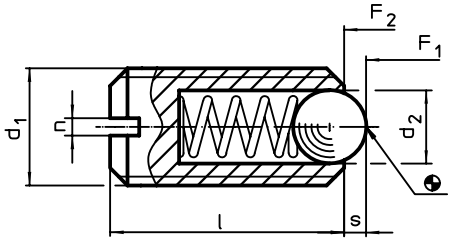

ORDER INFORMATION

Dimensions				Stroke s	Spring load[1]					Art. No.
d_1	d_2	l	n		F_1 ~	F_2 ~	min.	max.		
[mm]				[mm]	[N]		[°C]		[g]	
ball from stainless steel										
M 6	3,5	14	1,0	0,9	12	17	-30	50	0,6	22040.0006
M 8	5,0	16	1,2	1,5	20	35	-30	50	1,3	22040.0008
M10	6,0	19	1,5	1,9	25	45	-30	50	2,6	22040.0010
ball from thermoplastic										
M 6	3,5	14	1,0	0,9	12	17	-30	50	0,5	22040.0406
M 8	5,0	16	1,2	1,5	20	35	-30	50	1,0	22040.0408
M10	6,0	19	1,5	1,9	25	45	-30	50	1,8	22040.0410

[1] statistical average value

APPLICATION EXAMPLE

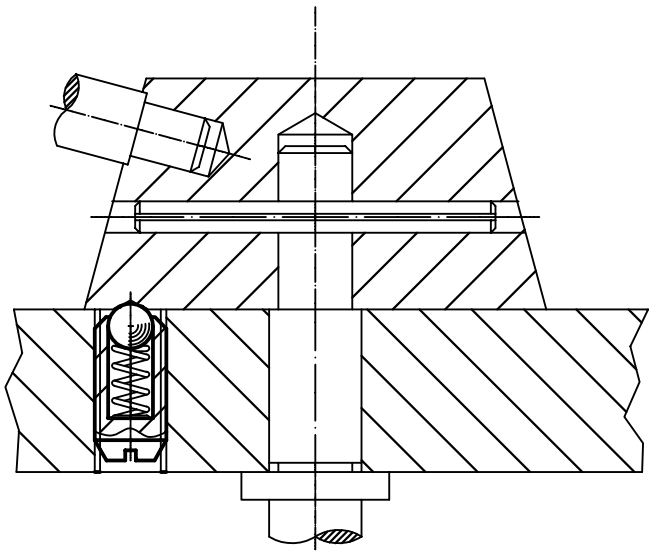

2

Spring Plungers • with ball and slot

EH 22050.

PRODUCT DESCRIPTION

Spring plungers can be used for locating or for applying pressure, as a detent or for ejection.

Material

Body
- Free cutting steel, blackened
- Stainless steel 1.4305

Ball
- Ball-bearing steel, hardened
- Stainless steel, hardened

Spring
- Stainless steel

Characteristic

Standard spring load: no marking
Reinforced spring load: marked with two lines

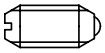

Standard spring load

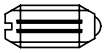

Heavy spring load

MORE INFORMATION

Notes

Special types on request.
Spring plungers are specially tested for spring range and forces.

References

Thread lock on request, please refer to appendix - Technical Data -
Calculation of indexing resistance, see details at the start of the section.

DRAWING

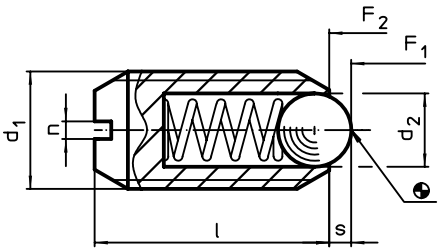

ORDER INFORMATION

Dimensions				Stroke	Spring load[1]				Art. No.
d_1	d_2	l	n	s	F_1 ~	F_2 ~	max.		
[mm]				[mm]	[N]		[°C]	[g]	
free cutting steel, standard spring load									
M 3	1,5	7	0,40	0,4	3,0	4,5	250	0,2	22050.0003
M 4	2,5	9	0,60	0,8	8,5	14,0	250	0,4	22050.0004
M 5	3,0	12	0,80	0,9	8,0	14,0	250	1,0	22050.0005
M 6	3,5	14	1,00	1,0	11,0	18,0	250	1,7	22050.0006
M 8	4,5	16	1,20	1,5	18,0	31,0	250	3,5	22050.0008
M10	6,0	19	1,50	2,0	24,0	45,0	250	6,6	22050.0010
M12	8,0	22	2,00	2,5	26,0	49,0	250	11,0	22050.0012
M16	10,0	24	2,00	3,5	41,0	86,0	250	23,0	22050.0016
M20	12,0	30	2,50	4,5	56,0	111,0	250	45,0	22050.0020
M24	15,0	34	3,00	5,5	81,0	151,0	250	72,0	22050.0024
free cutting steel, heavy spring load									
M 4	2,5	9	0,60	0,8	12,0	18,0	250	0,4	22050.0204
M 5	3,0	12	0,80	0,9	15,0	22,0	250	1,0	22050.0205
M 6	3,5	14	1,00	1,0	19,0	28,0	250	1,7	22050.0206
M 8	4,5	16	1,20	1,5	36,0	62,0	250	3,6	22050.0208
M10	6,0	19	1,50	2,0	57,0	104,0	250	6,6	22050.0210
M12	8,0	22	2,00	2,5	61,0	110,0	250	11,0	22050.0212
M16	10,0	24	2,00	3,5	68,0	142,0	250	23,0	22050.0216
M20	12,0	30	2,50	4,5	84,0	166,0	250	43,0	22050.0220
M24	15,0	34	3,00	5,5	127,0	237,0	250	73,0	22050.0224

[1] statistical average value

→

Dimensions				Stroke s	Spring load[1]				Art. No.
d_1	d_2	l	n		F_1 ~	F_2 ~	max.		
[mm]				[mm]	[N]		[°C]	[g]	
stainless steel, standard spring load									
M 2	1,0	4	0,25	0,3	0,8	1,5	250	0,1	**22050.0402**
M 3	1,5	7	0,40	0,4	3,0	4,5	250	0,2	**22050.0403**
M 4	2,5	9	0,60	0,8	8,5	14,0	250	0,4	**22050.0404**
M 5	3,0	12	0,80	0,9	8,0	14,0	250	1,0	**22050.0405**
M 6	3,5	14	1,00	1,0	11,0	18,0	250	1,7	**22050.0406**
M 8	4,5	16	1,20	1,5	18,0	31,0	250	3,7	**22050.0408**
M10	6,0	19	1,50	2,0	24,0	45,0	250	6,8	**22050.0410**
M12	8,0	22	2,00	2,5	26,0	49,0	250	11,0	**22050.0412**
M16	10,0	24	2,00	3,5	41,0	86,0	250	23,0	**22050.0416**
M20	12,0	30	2,50	4,5	56,0	111,0	250	45,0	**22050.0420**
M24	15,0	34	3,00	5,5	81,0	151,0	250	70,0	**22050.0424**
stainless steel, heavy spring load									
M 4	2,5	9	0,60	0,9	12,0	18,0	250	1,0	**22050.0604**
M 5	3,0	12	0,80	0,9	15,0	22,0	250	1,2	**22050.0605**
M 6	3,5	14	1,00	1,0	19,0	28,0	250	1,9	**22050.0606**
M 8	4,5	16	1,20	1,5	36,0	62,0	250	3,6	**22050.0608**
M10	6,0	19	1,50	2,0	57,0	104,0	250	6,7	**22050.0610**
M12	8,0	22	2,00	2,5	61,0	110,0	250	11,0	**22050.0612**
M16	10,0	24	2,00	3,5	68,0	142,0	250	23,0	**22050.0616**
M20	12,0	30	2,50	4,5	84,0	166,0	250	45,0	**22050.0620**
M24	15,0	34	3,00	5,5	127,0	237,0	250	72,0	**22050.0624**

[1] statistical average value

APPLICATION EXAMPLE

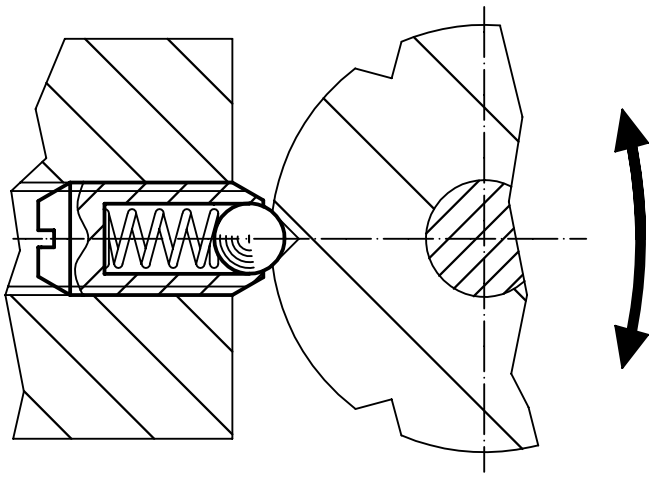

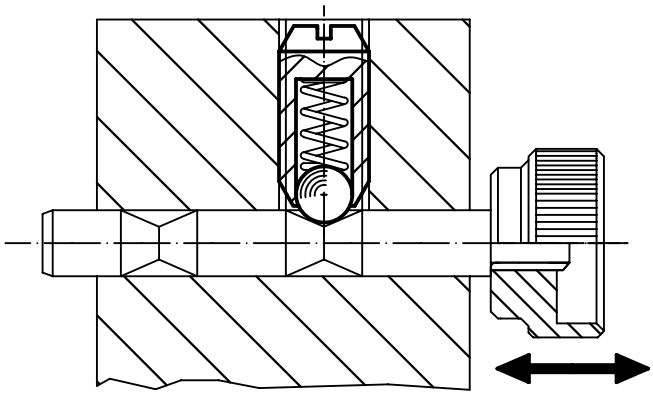

2

Spring Plungers • with ceramic ball and slot, stainless steel A4

EH 22050.

PRODUCT DESCRIPTION

Spring plungers can be used for locating or for applying pressure, as a detent or for ejection. The version from stainless steel A4 guarantees the highest corrosion protection.
Characteristics of the ceramic ball:

- Highly impact-resistant
- Abrasion resistant
- Antimagnetic
- Electrically isolating

Material

Body
- Stainless steel A4, passivated

Ball
- Ceramic

Spring
- Stainless steel A4, passivated

Characteristic

Standard spring load: no marking
Reinforced spring load: marked with two lines

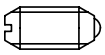

Standard spring load

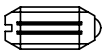

Heavy spring load

MORE INFORMATION

Notes

Special types on request.
Spring plungers are specially tested for spring range and forces.

References

Thread lock on request, please refer to appendix - Technical Data - Calculation of indexing resistance, see details at the start of the section.

DRAWING

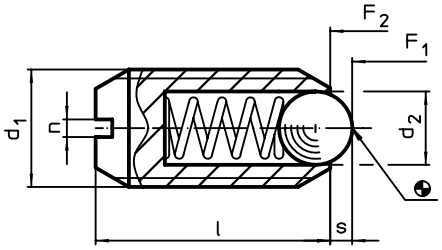

ORDER INFORMATION

Dimensions				Stroke s	Spring load[1]				Art. No.
d_1	d_2	l	n		F_1 ~	F_2 ~	max.		
[mm]				[mm]	[N]		[°C]	[g]	
stainless steel A4, standard spring load									
M 4	2,5	9	0,6	0,8	8,5	14	250	0,4	22050.1404
M 5	3,0	12	0,8	0,9	8,0	14	250	0,9	22050.1405
M 6	3,5	14	1,0	1,0	11,0	18	250	1,6	22050.1406
M 8	4,5	16	1,2	1,5	18,0	31	250	3,5	22050.1408
M10	6,0	19	1,5	2,0	24,0	45	250	6,2	22050.1410
M12	8,0	22	2,0	2,5	26,0	49	250	9,8	22050.1412
M16	10,0	24	2,0	3,5	41,0	86	250	19,8	22050.1416
stainless steel A4, heavy spring load									
M 4	2,5	9	0,6	0,8	12,0	18	250	0,5	22050.1604
M 5	3,0	12	0,8	0,9	15,0	22	250	1,1	22050.1605
M 6	3,5	14	1,0	1,0	19,0	28	250	1,8	22050.1606
M 8	4,5	16	1,2	1,5	36,0	62	250	3,4	22050.1608
M10	6,0	19	1,5	2,0	57,0	104	250	6,1	22050.1610
M12	8,0	22	2,0	2,5	61,0	110	250	9,8	22050.1612
M16	10,0	24	2,0	3,5	68,0	142	250	19,8	22050.1616

[1] statistical average value

Spring Plungers • with pin and slot

EH 22050.

PRODUCT DESCRIPTION

Spring plungers can be used for locating or for applying pressure, as a detent or for ejection.

Material

Pin
- Free cutting steel, hardened, blackened
- Stainless steel 1.4305

Body
- Free cutting steel, blackened
- Stainless steel 1.4305

Spring
- Stainless steel

Characteristic

Standard spring load: no marking
Reinforced spring load: marked with two lines

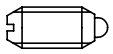

Standard spring load

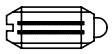

Heavy spring load

MORE INFORMATION

Notes

Special types on request.
Spring plungers are specially tested for spring range and forces.

References

Thread lock on request, please refer to appendix - Technical Data -

DRAWING

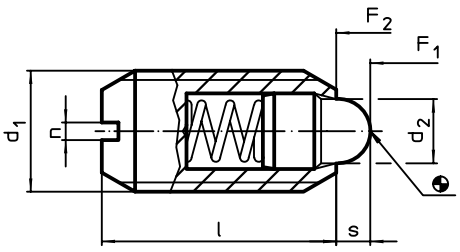

ORDER INFORMATION

Dimensions				Stroke s	Spring load[1]				Art. No.
d_1	d_2	l	n		F_1 ~	F_2 ~	max.		
[mm]				[mm]	[N]		[°C]	[g]	
free cutting steel, standard spring load									
M 4	1,8	9	0,6	1,5	4,5	12,5	250	0,4	**22050.0104**
M 5	2,4	12	0,8	2,0	5,0	13,0	250	1,1	**22050.0105**
M 6	2,7	14	1,0	2,0	6,0	17,0	250	1,8	**22050.0106**
M 8	3,8	16	1,2	2,0	16,0	33,0	250	3,7	**22050.0108**
M10	4,5	19	1,5	2,5	19,0	42,0	250	7,1	**22050.0110**
M12	6,2	22	2,0	3,5	22,0	57,0	250	11,0	**22050.0112**
M16	8,5	24	2,0	4,5	38,0	78,0	250	23,0	**22050.0116**
M20	10,0	30	2,5	6,5	39,0	81,0	250	46,0	**22050.0120**
M24	13,0	34	3,0	8,0	72,0	155,0	250	73,0	**22050.0124**
free cutting steel, heavy spring load									
M 6	2,7	14	1,0	2,0	11,0	25,0	250	1,8	**22050.0306**
M 8	3,8	16	1,2	2,0	23,0	59,0	250	3,8	**22050.0308**
M10	4,5	19	1,5	2,5	20,0	54,0	250	7,0	**22050.0310**
M12	6,2	22	2,0	3,5	38,0	96,0	250	11,0	**22050.0312**
M16	8,5	24	2,0	4,5	50,0	100,0	250	23,0	**22050.0316**
M20	10,0	30	2,5	6,5	52,0	133,0	250	46,0	**22050.0320**
M24	13,0	34	3,0	8,0	91,0	223,0	250	74,0	**22050.0324**

[1] statistical average value

→

2

Dimensions				Stroke s	Spring load[1]				Art. No.
d_1	d_2	l	n		F_1 ~	F_2 ~	max.		
[mm]				[mm]	[N]		[°C]	[g]	
stainless steel, standard spring load									
M 4	1,8	9	0,6	1,5	4,5	12,5	250	0,6	**22050.0504**
M 5	2,4	12	0,8	2,0	5,0	13,0	250	1,3	**22050.0505**
M 6	2,7	14	1,0	2,0	6,0	17,0	250	2,0	**22050.0506**
M 8	3,8	16	1,2	2,0	16,0	33,0	250	3,9	**22050.0508**
M10	4,5	19	1,5	2,5	19,0	42,0	250	7,2	**22050.0510**
M12	6,2	22	2,0	3,5	22,0	57,0	250	11,0	**22050.0512**
M16	8,5	24	2,0	4,5	38,0	78,0	250	23,0	**22050.0516**
M20	10,0	30	2,5	6,5	39,0	81,0	250	47,0	**22050.0520**
M24	13,0	34	3,0	8,0	72,0	155,0	250	74,0	**22050.0524**
stainless steel, heavy spring load									
M 6	2,7	14	1,0	2,0	11,0	25,0	250	2,0	**22050.0706**
M 8	3,8	16	1,2	2,0	23,0	59,0	250	4,0	**22050.0708**
M10	4,5	19	1,5	2,5	20,0	54,0	250	7,1	**22050.0710**
M12	6,2	22	2,0	3,5	38,0	96,0	250	11,0	**22050.0712**
M16	8,5	24	2,0	4,5	50,0	100,0	250	23,0	**22050.0716**
M20	10,0	30	2,5	6,5	52,0	133,0	250	47,0	**22050.0720**
M24	13,0	34	3,0	8,0	91,0	223,0	250	75,0	**22050.0724**

[1] statistical average value

APPLICATION EXAMPLE

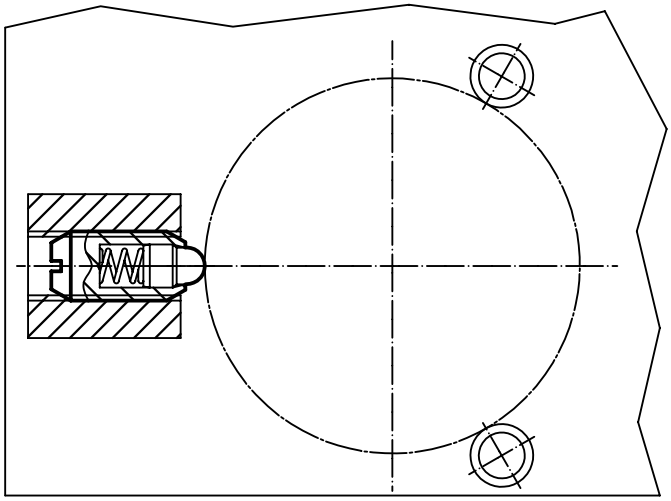

Spring Plungers • headed, with ball and slot

EH 22050.

PRODUCT DESCRIPTION

Spring plungers can be used for locating or for applying pressure, as a detent or for ejection. Precise screwing depth due to head.

Material

Body
- Free cutting steel, blackened
- Stainless steel 1.4305

Ball
- Ball-bearing steel, hardened
- Stainless steel, hardened

Spring
- Stainless steel

Assembly

Respect dimension l_3 for M 4 / M 5.

Characteristic

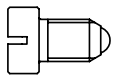

Standard spring load

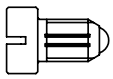

Heavy spring load

MORE INFORMATION

Notes

Special types on request.
Spring plungers are specially tested for spring range and forces.

References

Thread lock on request, please refer to appendix - Technical Data -
Calculation of indexing resistance, see details at the start of the section.

DRAWING

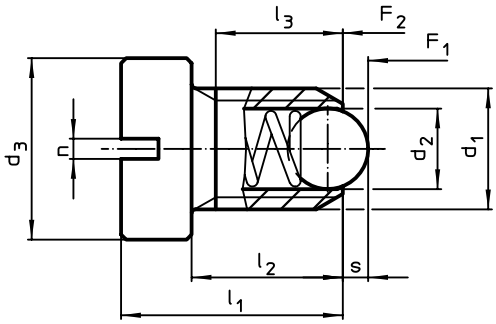

Size M4+M5

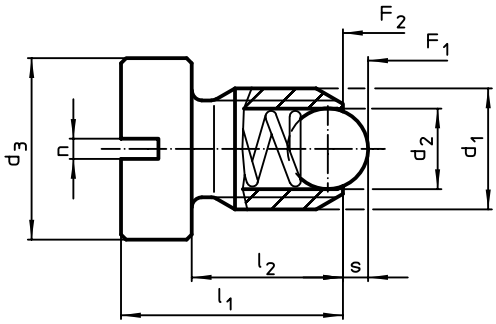

Size M6–M12

ORDER INFORMATION

Dimensions							Stroke s	Spring load[1]				Art. No.
d_1	d_2	d_3	l_1	l_2	l_3	n		F_1 ~	F_2 ~	max.		
[mm]							[mm]	[N]		[°C]	[g]	
free cutting steel, standard spring load												
M 4	2,5	6	9,5	6,5	5,0	0,6	0,8	8,0	14,0	250	0,92	22050.0930
M 5	3,0	8	12,5	8,5	6,7	0,8	0,9	8,0	14,0	250	2,10	22050.0931
M 6	3,5	10	14,0	9,0	–	1,0	1,0	11,0	18,0	250	3,70	22050.0932
M 8	4,5	13	16,5	11,0	–	1,2	1,5	18,0	31,0	250	7,50	22050.0933
M10	6,0	16	20,0	14,0	–	1,5	2,0	24,0	45,0	250	14,00	22050.0934
M12	8,0	18	22,0	15,0	–	2,0	2,5	26,0	49,0	250	19,00	22050.0935
free cutting steel, heavy spring load												
M 4	2,5	6	9,5	6,5	5,0	0,6	0,8	12,0	18,0	250	0,92	22050.1040
M 5	3,0	8	12,5	8,5	6,7	0,8	0,9	15,0	22,0	250	2,10	22050.1050
M 6	3,5	10	14,0	9,0	–	1,0	1,0	19,3	26,6	250	3,70	22050.1060
M 8	4,5	13	16,5	11,0	–	1,2	1,5	36,0	60,5	250	7,50	22050.1080
M10	6,0	16	20,0	14,0	–	1,5	2,0	57,0	103,5	250	14,00	22050.1100
M12	8,0	18	22,0	15,0	–	2,0	2,5	61,0	110,0	250	19,00	22050.1120

[1] statistical average value

→

2

Dimensions							Stroke s	Spring load[1]				Art. No.
d_1	d_2	d_3	l_1	l_2	l_3	n		F_1 ~	F_2 ~	max.		
[mm]							[mm]	[N]		[°C]	[g]	
stainless steel, standard spring load												
M 4	2,5	6	9,5	6,5	5,0	0,6	0,8	8,0	14,0	250	1,20	22050.0940
M 5	3,0	8	12,5	8,5	6,7	0,8	0,9	8,0	14,0	250	2,40	22050.0941
M 6	3,5	10	14,0	9,0	–	1,0	1,0	11,0	18,0	250	3,90	22050.0942
M 8	4,5	13	16,5	11,0	–	1,2	1,5	18,0	31,0	250	7,90	22050.0943
M10	6,0	16	20,0	14,0	–	1,5	2,0	24,0	45,0	250	14,00	22050.0944
M12	8,0	18	22,0	15,0	–	2,0	2,5	26,0	49,0	250	20,00	22050.0945
stainless steel, heavy spring load												
M 4	2,5	6	9,5	6,5	5,0	0,6	0,8	12,0	18,0	250	1,20	22050.1240
M 5	3,0	8	12,5	8,5	6,7	0,8	0,9	15,0	22,0	250	2,40	22050.1250
M 6	3,5	10	14,0	9,0	–	1,0	1,0	19,3	26,6	250	3,90	22050.1260
M 8	4,5	13	16,5	11,0	–	1,2	1,5	36,0	60,5	250	7,90	22050.1280
M10	6,0	16	20,0	14,0	–	1,5	2,0	57,0	103,5	250	14,00	22050.1300
M12	8,0	18	22,0	15,0	–	2,0	2,5	61,0	110,0	250	20,00	22050.1320

[1] statistical average value

APPLICATION EXAMPLE

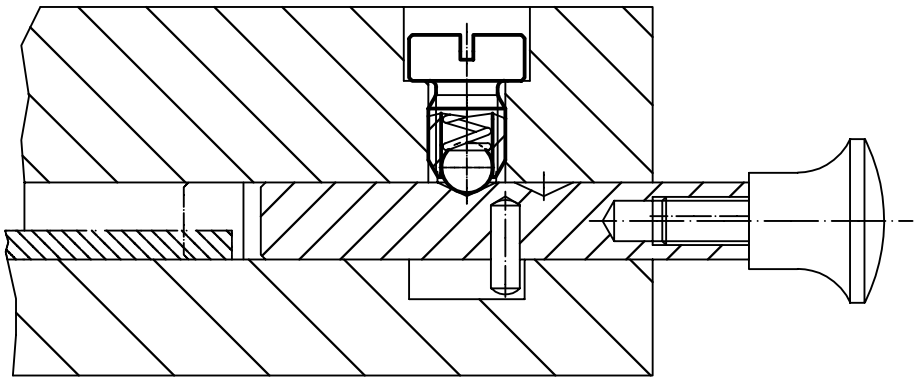

Spring Plungers • with moveable ball and slot

EH 22051.

PRODUCT DESCRIPTION

Spring plungers can be used for locating or for applying pressure, as a detent or for ejection. The running of the ball minimises wear on the counterpart, this also results in a positive locking behaviour depending on the counterpart.
Plastic balls offer electric insulation.

Material

Body
- Free cutting steel, blackened
- Stainless steel 1.4305

Bearing
- Plastic

Ball
- Ball-bearing steel, hardened
- Stainless steel, hardened

Spring
- Stainless steel

Characteristic

Standard spring load: no marking
Reinforced spring load: marked with two lines

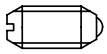

Standard spring load

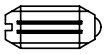

Heavy spring load

MORE INFORMATION

Notes

Special types on request.
Spring plungers are specially tested for spring range and forces.

References

Thread lock on request, please refer to appendix - Technical Data -
Calculation of indexing resistance, see details at the start of the section.

DRAWING

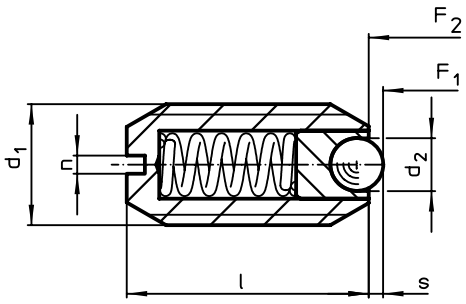

ORDER INFORMATION

Dimensions				Stroke s	Spring load[1]					Art. No.
d_1	d_2	l	n		F_1 ~	F_2 ~	min.	max.		
[mm]				[mm]	[N]		[°C]		[g]	
free cutting steel, standard spring load										
M 5	2,0	12	0,8	0,50	4,8	6,8	-30	90	1,1	22051.0005
M 6	2,5	14	1,0	0,70	6,3	10,0	-30	90	2,0	22051.0006
M 8	3,5	16	1,2	0,95	16,0	24,0	-30	90	4,2	22051.0008
M10	4,5	19	1,5	1,40	18,8	31,7	-30	90	7,6	22051.0010
M12	6,5	22	2,0	2,50	24,0	49,0	-30	90	12,0	22051.0012
M16	8,5	24	2,0	3,10	38,0	68,0	-30	90	25,0	22051.0016
free cutting steel, heavy spring load										
M 5	2,0	12	0,8	0,50	10,0	14,0	-30	90	1,2	22051.0205
M 6	2,5	14	1,0	0,70	11,0	16,0	-30	90	2,1	22051.0206
M 8	3,5	16	1,2	0,95	23,0	40,0	-30	90	4,3	22051.0208
M10	4,5	19	1,5	1,40	28,0	54,3	-30	90	7,8	22051.0210
M12	6,5	22	2,0	2,50	36,5	77,3	-30	90	12,3	22051.0212
M16	8,5	24	2,0	3,10	50,0	88,7	-30	90	25,0	22051.0216

[1] statistical average value

2

Dimensions				Stroke s	Spring load[1]					Art. No.
d_1	d_2	l	n		F_1 ~	F_2 ~	min.	max.		
[mm]				[mm]	[N]		[°C]		[g]	
stainless steel, standard spring load										
M 5	2,0	12	0,8	0,50	4,8	6,8	-30	90	1,1	**22051.0405**
M 6	2,5	14	1,0	0,70	6,3	10,0	-30	90	2,0	**22051.0406**
M 8	3,5	16	1,2	0,95	16,0	24,0	-30	90	4,2	**22051.0408**
M10	4,5	19	1,5	1,40	18,8	31,7	-30	90	7,6	**22051.0410**
M12	6,5	22	2,0	2,50	24,0	49,0	-30	90	12,0	**22051.0412**
M16	8,2	24	2,0	3,10	38,0	68,0	-30	90	25,0	**22051.0416**
stainless steel, heavy spring load										
M 5	2,0	12	0,8	0,50	10,0	14,0	-30	90	1,1	**22051.0605**
M 6	2,5	14	1,0	0,70	11,0	16,0	-30	90	2,1	**22051.0606**
M 8	3,5	16	1,2	0,95	23,0	40,0	-30	90	4,3	**22051.0608**
M10	4,5	19	1,5	1,40	28,0	54,3	-30	90	7,8	**22051.0610**
M12	6,5	22	2,0	2,50	36,5	77,3	-30	90	12,3	**22051.0612**
M16	8,5	24	2,0	3,10	50,0	88,7	-30	90	25,0	**22051.0616**

[1] statistical average value

APPLICATION EXAMPLE

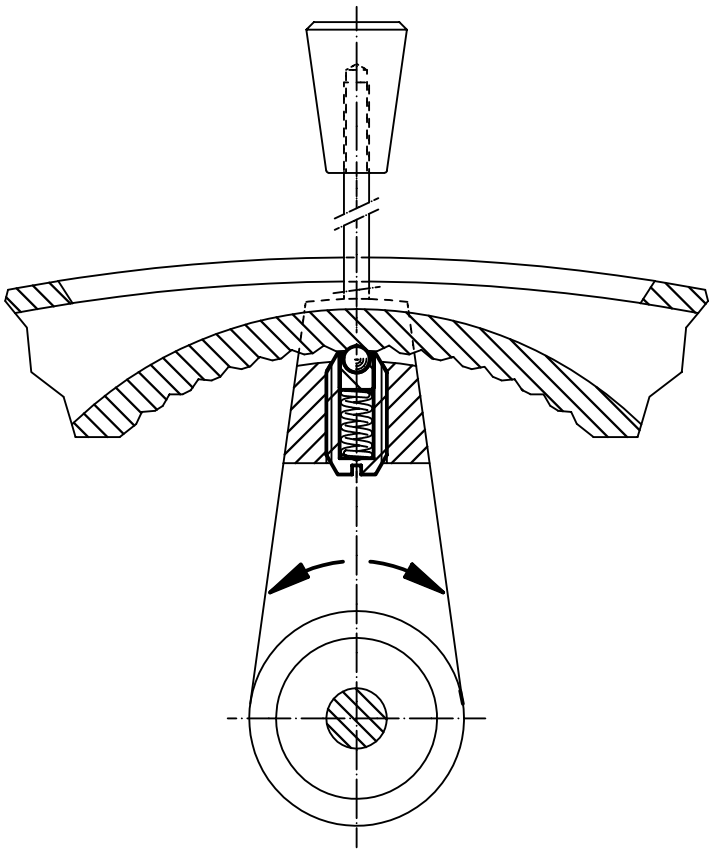

Spring Plungers • with internal hexagon

EH 22060.

PRODUCT DESCRIPTION

Spring plungers can be used for locating or for applying pressure, as a detent or for ejection.

Material

Pin
- Free cutting steel, hardened, blackened
- Thermoplastic POM, white
- Stainless steel 1.4305

Body
- Free cutting steel, blackened
- Stainless steel 1.4305

Spring
- Stainless steel

Assembly

Spring plungers can be mounted and removed by means of the slot or internal hexagon.
Please use a special assembly tool for mounting with a slot (pin side).

Characteristic

Standard spring load: no marking

Reinforced spring load: marked with two lines

Standard spring load

Heavy spring load

MORE INFORMATION

Notes

Special types on request.
Spring plungers are specially tested for spring range and forces.

References

Thread lock on request, please refer to appendix - Technical Data -

Further products

Spring Plungers, with internal hexagon and seal . . . . . → p. 69

DRAWING

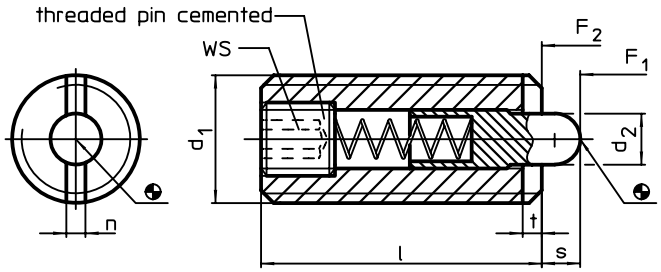

ORDER INFORMATION

Dimensions					WS	Stroke s	Spring load[1]					Art. No.
d_1	d_2	l	n	t			F_1 ~	F_2 ~	min.	max.		
[mm]					[mm]	[mm]			[°C]		[g]	
free cutting steel, standard spring load												
M 3	1,0	12	0,4	0,5	0,7	1,0	2,0 N	4 N	–	250	0,40	**22060.0003**
M 4	1,5	15	0,6	0,6	1,3	1,5	4,5 N	16 N	–	250	0,93	**22060.0004**
M 5	2,4	18	1,2	0,8	1,5	2,3	6,0 N	19 N	–	250	1,70	**22060.0005**
M 6	2,7	20	1,3	0,9	2,0	2,5	6,0 N	19 N	–	250	2,80	**22060.0006**
M 8	3,5	22	1,5	1,4	2,5	3,0	10,0 N	39 N	–	250	5,80	**22060.0008**
M10	4,0	22	1,5	1,4	3,0	3,0	10,0 N	39 N	–	250	9,20	**22060.0010**
M12	6,0	28	2,7	2,0	4,0	4,0	12,0 N	53 N	–	250	16,00	**22060.0012**
M16	7,5	32	3,2	2,5	5,0	5,0	45,0 N	100 N	–	250	35,00	**22060.0016**
M20	10,0	40	3,7	3,0	6,0	7,0	52,0 N	125 N	–	250	68,00	**22060.0020**
M24	12,0	52	3,7	3,0	8,0	10,0	70,0 N	170 N	–	250	131,00	**22060.0024**
free cutting steel, heavy spring load												
M 5	2,4	18	1,2	0,8	1,5	2,3	11,0 N	40 N	–	250	1,60	**22060.0105**
M 6	2,7	20	1,3	0,9	2,0	2,5	15,0 N	43 N	–	250	2,80	**22060.0106**
M 8	3,5	22	1,5	1,4	2,5	3,0	20,0 N	75 N	–	250	5,80	**22060.0108**
M10	4,0	22	1,5	1,4	3,0	3,0	20,0 N	75 N	–	250	9,30	**22060.0110**
M12	6,0	28	2,7	2,0	4,0	4,0	45,0 N	120 N	–	250	16,00	**22060.0112**
M16	7,5	32	3,2	2,5	5,0	5,0	64,0 N	160 N	–	250	33,00	**22060.0116**
M20	10,0	40	3,7	3,0	6,0	7,0	75,0 N	195 N	–	250	67,00	**22060.0120**
M24	12,0	52	3,7	3,0	8,0	10,0	75,0 N	245 N	–	250	129,00	**22060.0124**

[1] statistical average value →

Dimensions d_1	d_2	l	n	t	WS	Stroke s	Spring load[1] F_1 ~	F_2 ~	min.	max.		Art. No.
[mm]					[mm]	[mm]			[°C]		[g]	
free cutting steel, pin from thermoplastic, standard spring load												
M 4	1,5	15	0,6	0,6	1,3	1,5	4,5 N	16 N	-30	50	0,86	22060.0204
M 5	2,4	18	1,2	0,8	1,5	2,3	6,0 N	19 N	-30	50	1,50	22060.0205
M 6	2,7	20	1,3	0,9	2,0	2,5	6,0 N	19 N	-30	50	2,30	22060.0206
M 8	3,5	22	1,5	1,4	2,5	3,0	10,0 N	39 N	-30	50	5,10	22060.0208
M10	4,0	22	1,5	1,4	3,0	3,0	10,0 N	39 N	-30	50	8,10	22060.0210
M12	6,0	28	2,7	2,0	4,0	4,0	12,0 N	53 N	-30	50	14,00	22060.0212
M16	7,5	32	3,2	2,5	5,0	5,0	45,0 N	100 N	-30	50	31,00	22060.0216
stainless steel, standard spring load												
M 3	1,0	12	0,4	0,5	0,7	1,0	2,0 kN	4 kN	–	250	0,40	22060.0403
M 4	1,5	15	0,6	0,6	1,3	1,5	4,5 N	16 N	–	250	1,10	22060.0404
M 5	2,4	18	1,2	0,8	1,5	2,3	6,0 N	19 N	–	250	1,70	22060.0405
M 6	2,7	20	1,3	0,9	2,0	2,5	6,0 N	19 N	–	250	2,80	22060.0406
M 8	3,5	22	1,5	1,4	2,5	3,0	10,0 N	39 N	–	250	5,90	22060.0408
M10	4,0	22	1,5	1,4	3,0	3,0	10,0 N	39 N	–	250	9,50	22060.0410
M12	6,0	28	2,7	2,0	4,0	4,0	12,0 N	53 N	–	250	17,00	22060.0412
M16	7,5	32	3,2	2,5	5,0	5,0	45,0 N	100 N	–	250	35,00	22060.0416
M20	10,0	40	3,7	3,0	6,0	7,0	52,0 N	125 N	–	250	68,00	22060.0420
stainless steel, pin from thermoplastic, standard spring load												
M 4	1,5	15	0,6	0,6	1,3	1,5	4,5 N	16 N	-30	50	0,93	22060.0604
M 5	2,4	18	1,2	0,8	1,5	2,3	6,0 N	19 N	-30	50	1,60	22060.0605
M 6	2,7	20	1,3	0,9	2,0	2,5	6,0 N	19 N	-30	50	2,50	22060.0606
M 8	3,5	22	1,5	1,4	2,5	3,0	10,0 N	39 N	-30	50	5,10	22060.0608
M10	4,0	22	1,5	1,4	3,0	3,0	10,0 N	39 N	-30	50	8,50	22060.0610
M12	6,0	28	2,7	2,0	4,0	4,0	12,0 N	53 N	-30	50	14,00	22060.0612
M16	7,5	32	3,2	2,5	5,0	5,0	45,0 N	100 N	-30	50	32,00	22060.0616

[1] statistical average value

ACCESSORIES

	Dimensions d_1 [mm]	[g]	Art. No.
assembly tool for mounting via slot (pin sided)			
	M 3	13	22060.0803
	M 4	29	22060.0804
	M 5	61	22060.0805
	M 6	67	22060.0806
	M 8	108	22060.0808
	M10	124	22060.0810
	M12	112	22060.0812
	M16	173	22060.0816
	M20	226	22060.0820
	M24	258	22070.0838

Spring Plungers • with internal hexagon and seal

EH 22060.

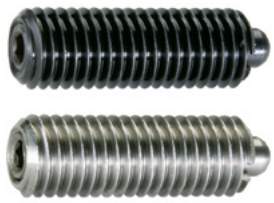

PRODUCT DESCRIPTION

Spring plungers can be used for locating or for applying pressure, as a detent or for ejection. By means of the seal, liquid cannot penetrate into the spring plunger.

Material

Pin
- Free cutting steel, hardened, blackened
- Stainless steel 1.4305

Seal
- NBR

Body
- Free cutting steel, blackened
- Stainless steel 1.4305

Spring
- Stainless steel

Assembly

Spring plungers can be mounted and removed by means of the slot or internal hexagon.
Please use a special assembly tool for mounting with a slot (pin side).
For the pin-sided assembly of the version d_1=M8 it is necessary to use the assembly tool for the version d_1=M10 (Art. No. 22060.0810).

Characteristic

Standard spring load: no marking
Reinforced spring load: marked with two lines

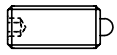

Standard spring load

Heavy spring load

MORE INFORMATION

Notes

Special types on request.
Spring plungers are specially tested for spring range and forces.

References

Compared to EH 22060., i.e. "no seal", there are deviations in dimension l, spring load and temperature range.
Thread lock on request, please refer to appendix - Technical Data -

Further products

Spring Plungers, with internal hexagon. . . . . → p. 67

DRAWING

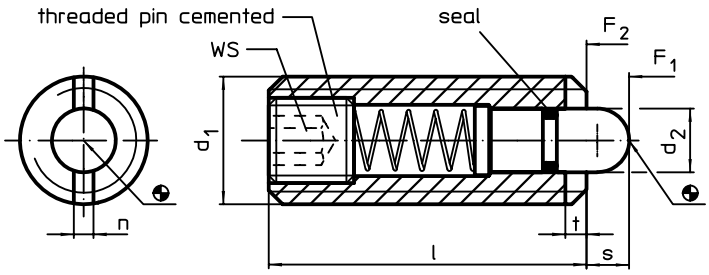

ORDER INFORMATION

Dimensions					WS	Stroke s	Spring load[1]					Art. No.
d_1	d_2	l	n	t			F_1 ~	F_2 ~	min.	max.		
[mm]					[mm]	[mm]	[N]		[°C]		[g]	
free cutting steel, standard spring load												
M 8	3,8	26	1,5	1,4	2,5	3,0	9	24	-30	80	6,9	22060.0048
M10	4,0	28	1,5	1,4	3,0	3,5	15	30	-30	80	11,0	22060.0050
M12	6,0	35	2,7	2,0	4,0	4,0	24	50	-30	80	20,0	22060.0052
M16	7,5	40	3,2	2,5	5,0	5,0	36	58	-30	80	43,0	22060.0056
free cutting steel, heavy spring load												
M 8	3,8	26	1,5	1,4	2,5	3,0	17	39	-30	80	6,6	22060.0148
M10	4,0	28	1,5	1,4	3,0	3,5	22	43	-30	80	12,0	22060.0150
M12	6,0	35	2,7	2,0	4,0	4,0	40	80	-30	80	20,0	22060.0152
M16	7,5	40	3,2	2,5	5,0	5,0	44	113	-30	80	45,0	22060.0156
stainless steel, standard spring load												
M 8	3,8	26	1,5	1,4	2,5	3,0	9	24	-30	80	7,2	22060.0448
M10	4,0	28	1,5	1,4	3,0	3,5	15	30	-30	80	12,0	22060.0450
M12	6,0	35	2,7	2,0	4,0	4,0	24	50	-30	80	20,0	22060.0452
M16	7,5	40	3,2	2,5	5,0	5,0	36	58	-30	80	44,0	22060.0456

[1] statistical average value

2

ACCESSORIES

	Dimensions d_1 [mm]	[g]	Art. No.
assembly tool for mounting via slot (pin sided)			
	M10	124	22060.0810
	M12	112	22060.0812
	M16	173	22060.0816

APPLICATION EXAMPLE

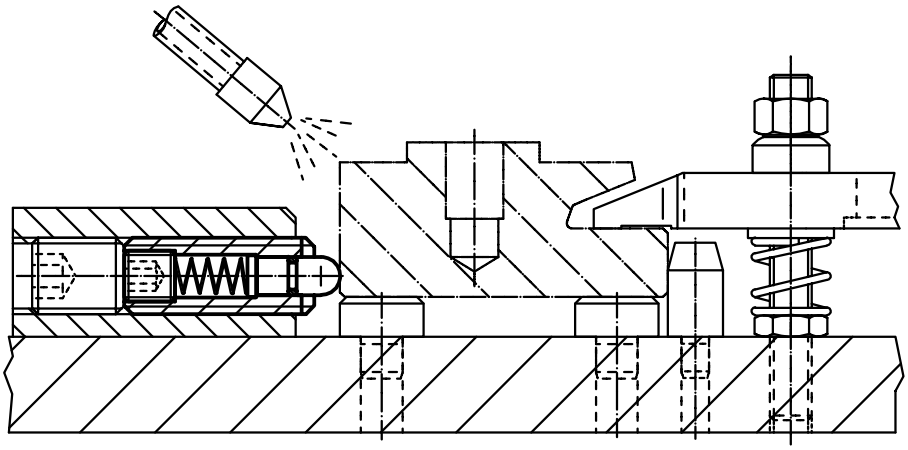

Spring Plungers • smooth

EH 22070.

PRODUCT DESCRIPTION

Especially designed for the use in tool-making.
Usable as ejection pins and spring stops.
It is impossible for the complete spring plunger or any of its individual parts to come out of the retaining bore.

Material

Pin
- Steel, case-hardened, blackened
- Stainless steel 1.4305

Body
- Free cutting steel, blackened
- Stainless steel 1.4305

Spring
- Stainless steel

MORE INFORMATION

Notes

Special types on request.
Spring plungers are specially tested for spring range and forces.

DRAWING

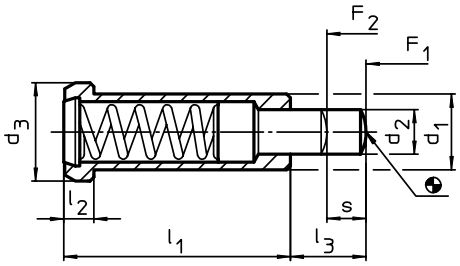

ORDER INFORMATION

Dimensions d_1 -0,05	d_2	d_3	l_1	l_2	l_3	Stroke s	Spring load[1] F_1 ~	F_2 ~	max.	Location hole H7		Art. No.
[mm]						[mm]	[N]		[°C]	[mm]	[g]	
free cutting steel, standard spring load												
6	2,7	8	20	3,2	6	3,5	10	22	250	6	4,2	22070.0006
8	3,9	10	24	3,2	8	4,5	30	88	250	8	7,7	22070.0008
10	5,9	13	30	4,0	10	5,5	42	110	250	10	16,0	22070.0010
12	7,9	16	36	5,0	12	6,5	50	130	250	12	27,0	22070.0012
stainless steel, standard spring load												
6	2,7	8	20	3,2	6	3,5	10	22	250	6	4,2	22070.0106
8	3,9	10	24	3,2	8	4,5	30	88	250	8	7,7	22070.0108
10	5,9	13	30	4,0	10	5,5	42	110	250	10	16,0	22070.0110
12	7,9	16	36	5,0	12	6,5	50	130	250	12	27,0	22070.0112

[1] statistical average value

APPLICATION EXAMPLE

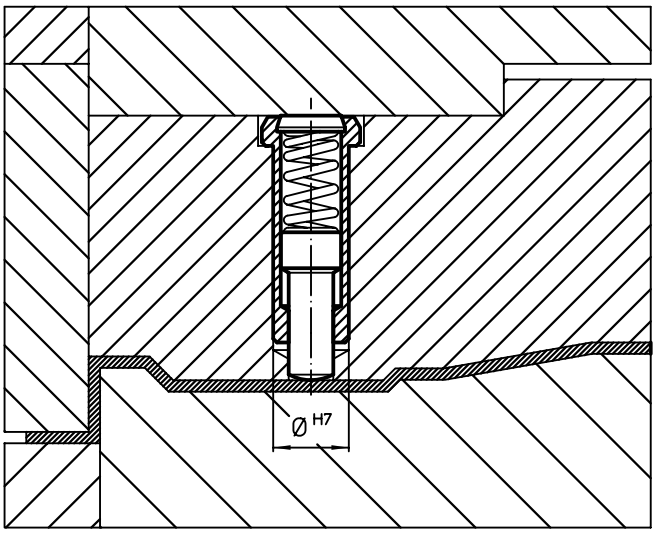

2

Spring Plungers • long

EH 22070.

PRODUCT DESCRIPTION

To be used for ejecting, as a detent, for applying pressure or as a shock element.

Material

Pin
- Steel, case-hardened, blackened
- Stainless steel 1.4305

Body
- Free cutting steel, blackened
- Stainless steel 1.4305
- Heat-treated steel, tempered, blackened

Spring
- Stainless steel

Assembly

Spring plungers can be mounted and removed by means of the slot or internal hexagon.
Please use a special assembly tool for mounting with a slot (pin side).

Characteristic

Standard spring load: no marking
Reinforced spring load: marked with two lines

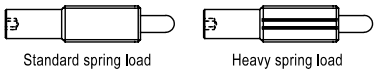

MORE INFORMATION

Notes

Special types on request.
Spring plungers are specially tested for spring range and forces.

References

Thread lock on request, please refer to appendix - Technical Data -

DRAWING

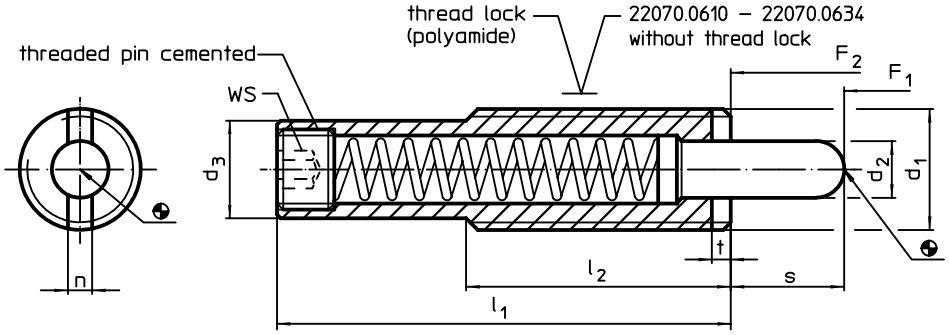

ORDER INFORMATION

Dimensions							Stroke s	WS	Spring load[1]					Art. No.
d_1	d_2	d_3	l_1	l_2	n	t			F_1 ~	F_2 ~	min.	max.		
[mm]							[mm]	[mm]	[N]		[°C]		[g]	
body from free cutting steel, standard spring load														
M10	4,0	7,8	**35**	25	1,5	1,4	**8**	3	6	16	-30	90	13	22070.0408
M12	5,5	9,5	**43**	35	2,7	2,0	**10**	4	4	18	-30	90	22	22070.0412
M16	8,0	13,4	**48**	35	3,2	3,0	**10**	6	7	24	-30	90	47	22070.0430
			58	35	3,2	3,0	**10**	6	15	42	-30	90	52	22070.0432
							15	6	9	33	-30	90	54	22070.0436
							20	6	4	23	-30	90	55	22070.0440
			83	35	3,2	3,0	**20**	6	11	43	-30	90	71	22070.0442
			98	35	3,2	3,0	**25**	6	13	41	-30	90	81	22070.0444
							30	6	13	47	-30	90	83	22070.0450
			118	35	3,2	3,0	**30**	6	24	110	-30	90	97	22070.0452
			148	35	3,2	3,0	**40**	6	13	63	-30	90	117	22070.0455
							50	6	7	43	-30	90	117	22070.0460
M24	10,0	19,6	**60**	45	3,7	3,0	**15**	8	14	87	-30	90	132	22070.0480
stainless steel, standard spring load														
M10	4,0	7,8	**35**	25	1,5	1,4	**8**	3	6	16	-30	90	13	22070.0208
M12	5,5	9,5	**43**	35	2,7	2,0	**10**	4	4	18	-30	90	22	22070.0212
M16	8,0	13,4	**48**	35	3,2	3,0	**10**	6	7	24	-30	90	47	22070.0230
			58	35	3,2	3,0	**15**	6	9	33	-30	90	54	22070.0236
							20	6	4	23	-30	90	55	22070.0240
			98	35	3,2	3,0	**25**	6	13	41	-30	90	81	22070.0244
							30	6	13	47	-30	90	83	22070.0250
			148	35	3,2	3,0	**40**	6	13	63	-30	90	117	22070.0255
							50	6	7	43	-30	90	117	22070.0260

[1] statistical average value

Dimensions							Stroke s	WS	Spring load[1]					Art. No.
d_1	d_2	d_3	l_1	l_2	n	t			F_1 ~	F_2 ~	min.	max.		
[mm]							[mm]	[mm]	[N]		[°C]		[g]	
M24	10,0	19,6	**60**	45	3,7	3,0	**15**	8	14	87	-30	90	132	22070.0280
body from free cutting steel, heavy spring load														
M10	4,0	7,8	**35**	25	1,5	1,4	**8**	3	12	22	-30	90	13	22070.0508
M12	5,5	9,5	**43**	35	2,7	2,0	**10**	4	7	46	-30	90	23	22070.0512
M16	8,0	13,4	**48**	35	3,2	3,0	**10**	6	10	43	-30	90	47	22070.0530
			58	35	3,2	3,0	**10**	6	14	84	-30	90	54	22070.0532
							15	6	10	57	-30	90	55	22070.0536
							20	6	8	33	-30	90	55	22070.0540
			83	35	3,2	3,0	**20**	6	18	72	-30	90	72	22070.0542
			98	35	3,2	3,0	**25**	6	20	70	-30	90	82	22070.0544
							30	6	20	80	-30	90	83	22070.0550
			148	35	3,2	3,0	**40**	6	21	113	-30	90	121	22070.0555
							50	6	13	75	-30	90	121	22070.0560
M24	10,0	19,6	**60**	45	3,7	3,0	**15**	8	24	192	-30	90	134	22070.0580
stainless steel, heavy spring load														
M10	4,0	7,8	**35**	25	1,5	1,4	**8**	3	12	22	-30	90	13	22070.0308
M12	5,5	9,5	**43**	35	2,7	2,0	**10**	4	7	46	-30	90	22	22070.0312
M16	8,0	13,4	**48**	35	3,2	3,0	**10**	6	10	43	-30	90	47	22070.0330
			58	35	3,2	3,0	**15**	6	10	57	-30	90	54	22070.0336
							20	6	8	33	-30	90	55	22070.0340
			98	35	3,2	3,0	**25**	6	20	70	-30	90	81	22070.0344
							30	6	20	80	-30	90	83	22070.0350
			148	35	3,2	3,0	**40**	6	21	113	-30	90	117	22070.0355
							50	6	13	75	-30	90	117	22070.0360
M24	10,0	19,6	**60**	45	3,7	3,0	**15**	8	24	192	-30	90	132	22070.0380
body from heat treated steel, standard spring load, without locking														
M16	7,3	13,4	**80**	35	3,2	3,0	**11**	8	17	74	–	250	69	22070.0610
			120	35	3,2	3,0	**21**	8	21	81	–	250	96	22070.0612
			150	35	3,2	3,0	**31**	8	21	89	–	250	117	22070.0614
			200	35	3,2	3,0	**41**	8	16	80	–	250	149	22070.0616
M22	9,0	19,0	**130**	50	3,5	4,0	**21**	8	80	214	–	250	211	22070.0630
			168	50	3,5	4,0	**31**	8	70	210	–	250	278	22070.0632
			226	50	3,5	4,0	**41**	8	76	208	–	250	358	22070.0634

[1] statistical average value

ACCESSORIES

	Dimensions d_1 [mm]	[g]	Art. No.
assembly tool for mounting via slot (pin sided)			
	M10	87	22070.0830
	M12	88	22070.0832
	M16	110	22070.0834
	M22	245	22070.0836
	M24	258	22070.0838

2

Spring Plungers • smooth, with collar and ball

EH 22080.

PRODUCT DESCRIPTION

Spring plungers can be used for locating or for applying pressure, as a detent or for ejection.

Material

Body
- Stainless steel 1.4303
- Brass
- Thermoplastic POM, blue

Ball
- Stainless steel, hardened
- Thermoplastic POM, white

Spring
- Stainless steel

Assembly

A tolerance of H7 is recommended for the locating hole of d_1.

Characteristic

Light spring load: marked with one line
Standard spring load: no marking
Reinforced spring load: marked with two lines

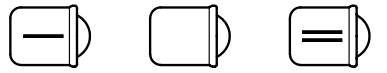

MORE INFORMATION

Notes

Special types on request.
Spring plungers are specially tested for spring range and forces.

References

Calculation of indexing resistance, see details at the start of the section.
Version with higher spring forces see "EH 22080. Spring Plungers, smooth, long, with collar and ball".

Further products

Spring Plungers, smooth, long, with collar and ball . . . . . → p. 76

DRAWING

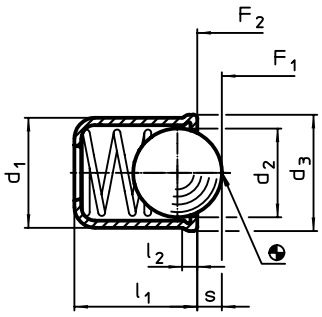

picture 1

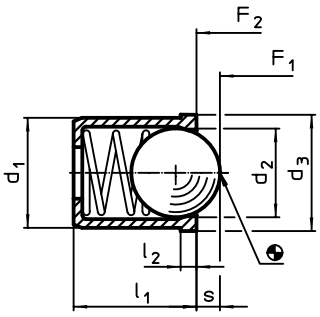

picture 2

ORDER INFORMATION

Dimensions					Stroke s	Spring load[1]				Location hole H7		Art. No.
d_1 +0,1	d_2	d_3	l_1	l_2 ~		F_1 ~	F_2 ~	min.	max.			
[mm]					[mm]	[N]		[°C]		[mm]	[g]	
body and ball from stainless steel, light spring load – picture 1												
4	3,00	4,6	5,0	0,9	1,00	0,4	1,0	–	250	4	0,3	22080.1004
5	4,00	5,6	6,0	0,9	1,40	0,5	4,7	–	250	5	0,6	22080.1005
6	5,00	6,5	7,0	1,0	1,80	2,3	6,5	–	250	6	1,0	22080.1006
8	6,50	8,5	9,0	1,1	2,40	4,0	9,0	–	250	8	2,1	22080.1008
10	8,50	11,0	13,0	1,5	3,30	3,9	10,0	–	250	10	4,4	22080.1010
12	10,00	13,0	16,0	2,3	4,00	6,2	14,6	–	250	12	7,3	22080.1012
body and ball from stainless steel, standard spring load – picture 1												
3	2,38	3,5	4,0	0,6	0,70	1,8	3,5	–	250	3	0,2	22080.0003
4	3,00	4,6	5,0	0,9	1,00	2,5	6,0	–	250	4	0,3	22080.0004
5	4,00	5,6	6,0	0,9	1,40	3,0	6,5	–	250	5	0,6	22080.0005
6	5,00	6,5	7,0	1,0	1,80	5,5	11,5	–	250	6	1,0	22080.0006
8	6,50	8,5	9,0	1,1	2,40	7,0	12,5	–	250	8	2,1	22080.0008
10	8,50	11,0	13,0	1,5	3,30	8,5	18,5	–	250	10	4,4	22080.0010
12	10,00	13,0	16,0	2,3	4,00	12,0	26,5	–	250	12	7,3	22080.0012

[1] statistical average value

→

Dimensions					Stroke	Spring load[1]				Location hole		Art. No.
d_1 +0,1	d_2	d_3	l_1	l_2 ~	s	F_1 ~	F_2 ~	min.	max.	H7		
[mm]					[mm]	[N]		[°C]		[mm]	[g]	
body and ball from stainless steel, heavy spring load – picture 1												
4	3,00	4,6	5,0	0,9	1,00	5,0	10,4	–	250	4	0,3	**22080.2004**
5	4,00	5,6	6,0	0,9	1,40	6,0	12,0	–	250	5	0,6	**22080.2005**
6	5,00	6,5	7,0	1,0	1,80	7,3	19,0	–	250	6	1,0	**22080.2006**
8	6,50	8,5	9,0	1,1	2,40	11,0	25,0	–	250	8	2,1	**22080.2008**
10	8,50	11,0	13,0	1,5	3,30	17,0	37,0	–	250	10	4,4	**22080.2010**
12	10,00	13,0	16,0	2,3	4,00	30,0	54,0	–	250	12	7,3	**22080.2012**
body from brass, ball from stainless steel, standard spring load – picture 2												
3	2,38	3,6	4,0	0,6	0,60	1,8	3,5	–	250	3	0,2	**22080.0203**
4	3,00	4,5	5,0	1,0	0,80	3,0	6,0	–	250	4	0,5	**22080.0204**
5	4,00	5,5	6,0	1,0	1,00	4,0	6,5	–	250	5	0,8	**22080.0205**
6	5,00	6,5	7,0	1,0	1,60	6,0	11,5	–	250	6	1,3	**22080.0206**
8	6,50	8,5	9,0	1,0	1,90	8,0	12,5	–	250	8	2,8	**22080.0208**
body from thermoplastic, ball from stainless steel, standard spring load – picture 2												
3	2,00	3,6	4,0	0,6	0,55	1,7	3,5	-30	50	3	0,1	**22080.0403**
4	3,00	4,6	5,0	1,0	0,80	3,0	6,5	-30	50	4	0,2	**22080.0404**
5	4,00	5,6	6,0	1,0	1,00	6,0	9,4	-30	50	5	0,4	**22080.0405**
6	5,00	6,5	7,0	1,0	1,60	6,2	12,6	-30	50	6	0,7	**22080.0406**
8	6,50	8,5	9,0	1,0	1,90	10,0	20,4	-30	50	8	1,5	**22080.0408**
10	8,00	11,0	13,5	1,5	2,40	11,9	22,3	-30	50	10	3,2	**22080.0410**
12	10,00	13,0	16,0	1,5	3,30	14,0	25,0	-30	50	12	5,8	**22080.0412**
body and ball from thermoplastic, standard spring load – picture 2												
4	3,00	4,6	5,0	1,0	0,80	3,0	6,5	-30	50	4	0,1	**22080.0604**
5	4,00	5,6	6,0	1,0	1,00	6,0	9,4	-30	50	5	0,2	**22080.0605**
6	5,00	6,5	7,0	1,0	1,60	6,2	12,6	-30	50	6	0,3	**22080.0606**
8	6,50	8,5	9,0	1,0	1,90	10,0	20,4	-30	50	8	0,6	**22080.0608**
10	8,00	11,0	13,5	1,5	2,40	11,9	22,3	-30	50	10	1,5	**22080.0610**
12	10,00	13,0	16,0	1,5	3,30	14,0	25,0	-30	50	12	2,5	**22080.0612**

[1] statistical average value

APPLICATION EXAMPLE

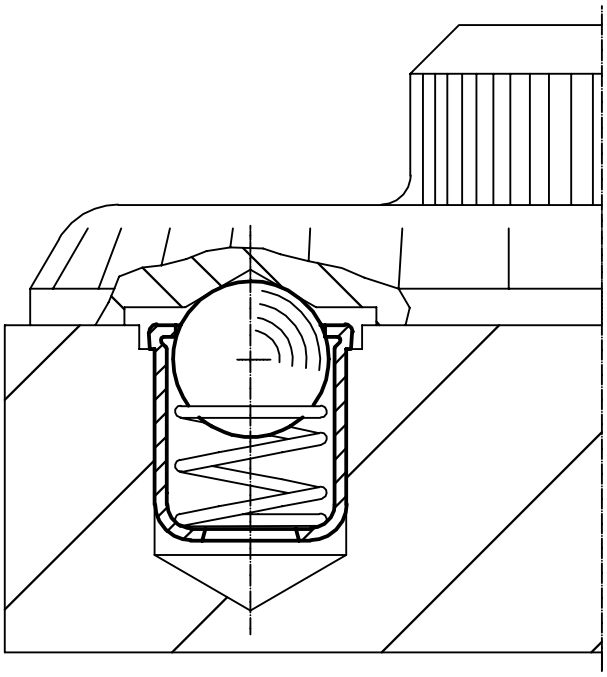

2

Spring Plungers • smooth, long, with collar and ball

EH 22080.

PRODUCT DESCRIPTION

Spring plungers can be used for locating or for applying pressure, as a detent or for ejection. This version has higher spring forces than the standard version. "EH 22080. Spring Plungers, smooth, with collar and ball".

Material

Body
- Stainless steel 1.4303

Ball
- Stainless steel, hardened

Spring
- Stainless steel

MORE INFORMATION

Notes

Special types on request.

Spring plungers are specially tested for spring range and forces.

References

Calculation of indexing resistance, see details at the start of the section.

Further products

Spring Plungers, smooth, with collar and ball . . . . . → p. 74

DRAWING

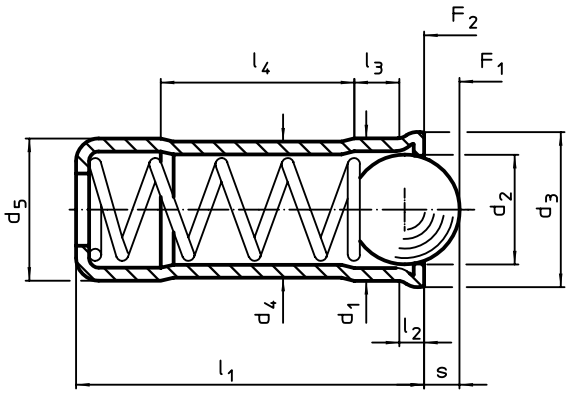

ORDER INFORMATION

Dimensions									Stroke	Spring load[1]			Location hole		Art. No.
d_1 +0,1 +0,04	d_2	d_3	d_4	d_5 ±0,04	l_1	l_2 ~	l_3 ~	l_4 ~	s +0,2 -0,1	F_1 ~	F_2 ~	max.	H7		
[mm]									[mm]	[N]		[°C]	[mm]	[g]	
4	3,0	4,6	3,85	4	10,7	0,9	1,8	5,6	0,9	12,9	19,0	250	4	0,6	22080.1104
5	4,0	5,6	4,85	5	12,0	0,9	2,1	6,0	1,3	19,3	29,2	250	5	1,0	22080.1105
6	5,0	6,5	5,85	6	15,0	1,0	2,3	8,2	1,7	28,0	47,5	250	6	2,0	22080.1106
8	6,5	8,5	7,55	8	18,0	1,1	2,9	9,5	2,3	40,0	67,3	250	8	4,0	22080.1108
10	8,5	11,0	9,55	10	26,0	1,5	4,2	14,3	3,1	66,0	105,0	250	10	8,0	22080.1110

[1] statistical average value

APPLICATION EXAMPLE

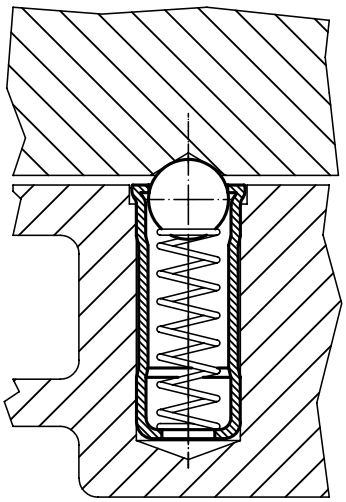

Spring Plungers • smooth, with collar and ball, self-clamping

EH 22080.

PRODUCT DESCRIPTION

Spring plungers can be used for locating or for applying pressure, as a detent or for ejection. Due to expanding fit of the body, the spring plungers can accommodate variation of up to 0,2 mm in the locating bore. A less precise locating hole means lower machining costs.

Material

Body
- Thermoplastic POM, black

Ball
- Stainless steel, hardened
- Thermoplastic POM, white

Spring
- Stainless steel

Assembly

Thanks to the flexible design of the body, a direct manual mounting and a secure overhead installation is possible.

MORE INFORMATION

Notes

Special types on request.
Spring plungers are specially tested for spring range and forces.

References

Calculation of indexing resistance, see details at the start of the section.

DRAWING

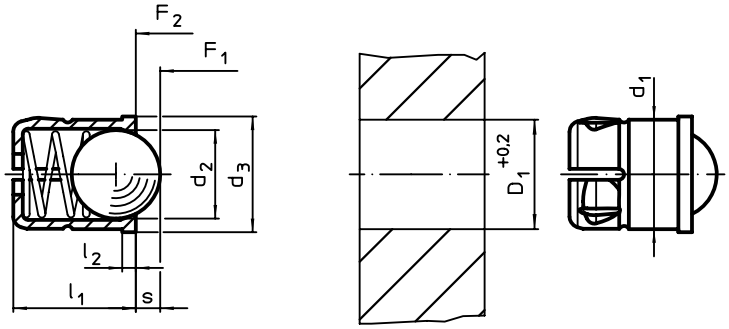

ORDER INFORMATION

Dimensions d_1 +0,1	d_2	d_3	l_1 ±0,2	l_2 ~	Stroke s	Spring load[1] F_1 ~	F_2 ~	min.	max.	Location hole D_1 +0,2		Art. No.
[mm]					[mm]	[N]		[°C]		[mm]	[g]	
thermoplastic body, stainless steel ball												
4	3,0	4,6	5,0	1,0	0,8	3,0	6,5	-30	50	4	0,12	22080.0704
5	4,0	5,6	6,0	1,0	1,0	6,0	9,4	-30	50	5	0,34	22080.0705
6	5,0	6,5	7,0	1,0	1,6	6,2	12,6	-30	50	6	0,63	22080.0706
8	6,5	8,5	9,0	1,0	1,9	10,0	20,4	-30	50	8	1,40	22080.0708
10	8,0	11,0	13,5	1,5	2,4	11,9	22,3	-30	50	10	2,90	22080.0710
body and ball from thermoplastic												
4	3,0	4,6	5,0	1,0	0,8	3,0	6,5	-30	50	4	0,06	22080.0804
5	4,0	5,6	6,0	1,0	1,0	6,0	9,4	-30	50	5	0,17	22080.0805
6	5,0	6,5	7,0	1,0	1,6	6,2	12,6	-30	50	6	0,23	22080.0806
8	6,5	8,5	9,0	1,0	1,9	10,0	20,4	-30	50	8	0,57	22080.0808
10	8,0	11,0	13,5	1,5	2,4	11,9	22,3	-30	50	10	1,21	22080.0810

[1] statistical average value

APPLICATION EXAMPLE

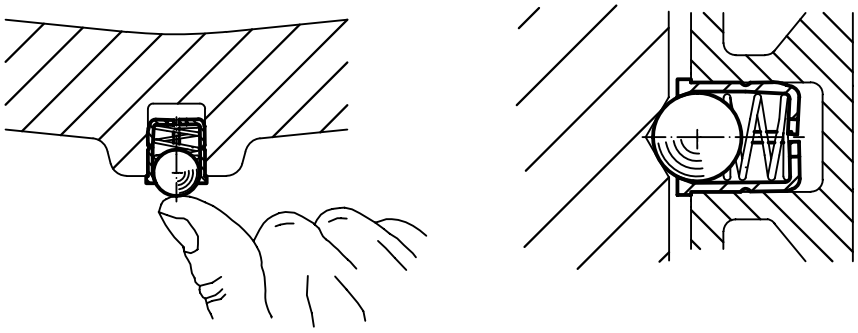

2

Spring Plungers • smooth, with collar and pin

EH 22080.

PRODUCT DESCRIPTION

To be used for locating, tightening, as an assembly support, for applying pressure, as a detent, for ejection or as a shock absorber.

Material

Pin
- Stainless steel 1.4305
- Thermoplastic POM, white

Body
- Stainless steel 1.4303

Spring
- Stainless steel

Assembly

A tolerance of H7 is recommended for the locating hole of d_1.

MORE INFORMATION

Notes

Special types on request.
Spring plungers are specially tested for spring range and forces.

DRAWING

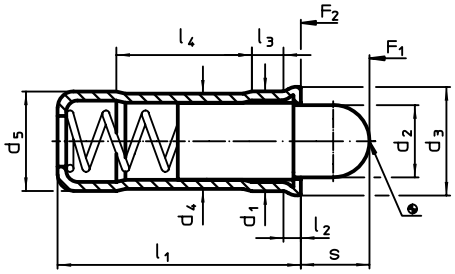

ORDER INFORMATION

Dimensions									Stroke s	Spring load[1]				Location hole H7		Art. No.
d_1 +0,1 +0,04	d_2	d_3	d_4	d_5 ±0,04	l_1	l_2 ~	l_3 ~	l_4 ~		F_1 ~	F_2 ~	min.	max.			
[mm]									[mm]	[N]		[°C]		[mm]	[g]	
body and pin from stainless steel																
4	2,8	4,6	3,85	4	10,7	0,9	1,8	5,6	2,7	3,0	8,2	–	250	4	0,7	22080.0104
5	3,8	5,6	4,85	5	12,0	0,9	2,1	6,0	4,0	3,3	9,0	–	250	5	1,2	22080.0105
6	4,8	6,5	5,85	6	15,0	1,0	2,3	8,2	5,5	6,1	12,0	–	250	6	2,2	22080.0106
8	6,2	8,5	7,55	8	18,0	1,1	2,9	9,5	6,5	9,0	20,1	–	250	8	4,2	22080.0108
10	8,1	11,0	9,55	10	26,0	1,5	4,2	14,3	8,0	16,2	29,0	–	250	10	9,0	22080.0110
stainless steel body, thermoplastic pin																
4	2,8	4,6	3,85	4	10,7	0,9	1,8	5,6	2,7	3,0	8,2	-30	50	4	0,5	22080.0124
5	3,8	5,6	4,85	5	12,0	0,9	2,1	6,0	4,0	3,3	9,0	-30	50	5	0,8	22080.0125
6	4,8	6,5	5,85	6	15,0	1,0	2,3	8,2	5,5	6,1	12,0	-30	50	6	1,3	22080.0126
8	6,2	8,5	7,55	8	18,0	1,1	2,9	9,5	6,5	9,0	20,1	-30	50	8	2,5	22080.0128
10	8,1	11,0	9,55	10	26,0	1,5	4,2	14,3	8,0	16,2	29,0	-30	50	10	5,0	22080.0130

[1] statistical average value

APPLICATION EXAMPLE

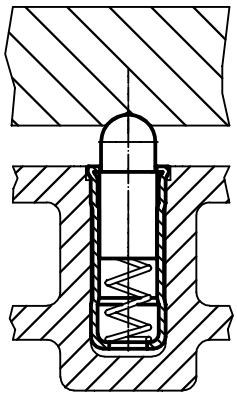

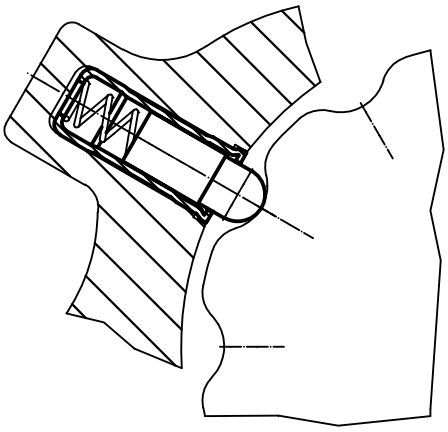

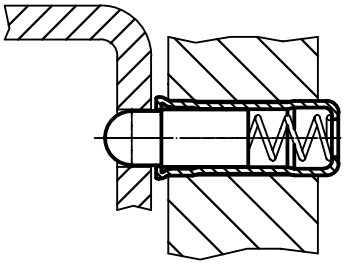

Spring Plungers • smooth, without collar

EH 22080.

PRODUCT DESCRIPTION

Spring plungers can be used for locating or for applying pressure, as a detent or for ejection.

Material

Body
- Stainless steel 1.4305

Ball
- Stainless steel, hardened

Spring
- Stainless steel

Assembly

The locating hole has to be adapted to each individual application case. We recommend an F8 size location hole for easy assembly and a H9 size when tight fit is required.

Characteristic

Standard spring load: no marking

Reinforced spring load: marked with two lines

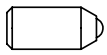

Standard spring load

Heavy spring load

MORE INFORMATION

Notes

Special types on request.
Spring plungers are specially tested for spring range and forces.

References

Calculation of indexing resistance, see details at the start of the section.

DRAWING

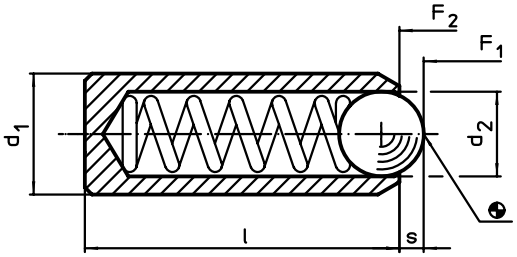

ORDER INFORMATION

Dimensions d_1 ±0,04 [mm]	d_2 [mm]	l [mm]	Stroke s [mm]	Spring load[1] F_1 ~ [N]	F_2 ~ [N]	max. [°C]	Location hole joint connection F8 / press fit H9 [mm]	[g]	Art. No.
stainless steel, standard spring load									
2,0	1,0	3,5	0,30	0,8	1,5	250	2,0	0,1	22080.0306
2,5	1,5	5,0	0,40	2,8	4,7	250	2,5	0,2	22080.0308
3,0	2,0	7,0	0,65	4,5	7,5	250	3,0	0,4	22080.0310
3,5	2,5	9,0	0,80	8,5	14,0	250	3,5	0,6	22080.0312
4,0	3,0	11,0	0,90	8,0	14,0	250	4,0	0,8	22080.0315
4,5	3,2	12,0	0,95	9,5	16,5	250	4,5	1,1	22080.0317
5,0	3,5	13,0	1,00	11,0	18,0	250	5,0	1,5	22080.0320
5,5	4,0	14,0	1,20	15,5	25,0	250	5,5	1,9	22080.0322
6,0	4,5	15,0	1,50	18,0	31,0	250	6,0	2,3	22080.0325
8,0	6,0	18,0	2,00	24,0	45,0	250	8,0	5,0	22080.0327
10,0	8,0	20,0	2,50	26,0	49,0	250	10,0	8,3	22080.0330
12,0	10,0	22,0	3,50	41,0	86,0	250	12,0	12,0	22080.0332
stainless steel, heavy spring load									
2,0	1,0	3,5	0,30	1,3	2,2	250	2,0	0,1	22080.0356
2,5	1,5	5,0	2,50	4,7	7,1	250	2,5	0,2	22080.0358
3,0	2,0	7,0	0,65	7,8	11,6	250	3,0	0,4	22080.0360
3,5	2,5	9,0	0,80	12,0	18,0	250	3,5	0,6	22080.0362
4,0	3,0	11,0	0,90	15,0	22,0	250	4,0	0,8	22080.0365
4,5	3,2	12,0	0,95	18,7	25,1	250	4,5	1,1	22080.0367
5,0	3,5	13,0	1,00	19,3	26,6	250	5,0	1,5	22080.0370
5,5	4,0	14,0	1,20	25,1	39,2	250	5,5	1,9	22080.0372
6,0	4,5	15,0	1,50	36,0	60,5	250	6,0	2,3	22080.0375
8,0	6,0	18,0	2,00	57,0	103,5	250	8,0	5,0	22080.0377
10,0	8,0	20,0	2,50	61,0	110,0	250	10,0	8,3	22080.0380
12,0	10,0	22,0	3,50	68,0	143,0	250	12,0	12,0	22080.0382

[1] statistical average value

2

Spring Plungers • smooth, without collar, with moveable ball

EH 22081.

PRODUCT DESCRIPTION

Spring plungers can be used for locating or for applying pressure, as a detent or for ejection. The running of the ball minimises wear on the counterpart, this also results in a positive locking behaviour depending on the counterpart.
Plastic balls offer electric insulation.

Material

Body
- Stainless steel 1.4305

Ball
- Stainless steel, hardened

Bearing
- Plastic

Spring
- Stainless steel

Assembly

The locating hole has to be adapted to each individual application case. We recommend an F8 size location hole for easy assembly and a H9 size when tight fit is required.

MORE INFORMATION

Notes

Special types on request.
Spring plungers are specially tested for spring range and forces.

References

Calculation of indexing resistance, see details at the start of the section.

DRAWING

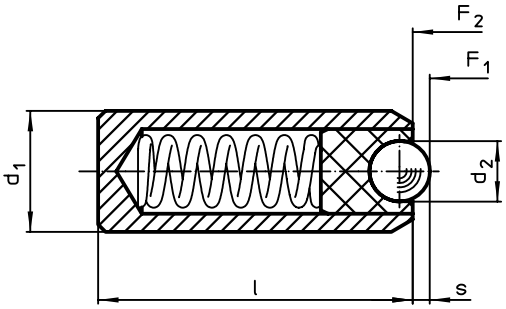

ORDER INFORMATION

Dimensions d_1 ±0,04 [mm]	d_2 [mm]	l [mm]	Stroke s [mm]	Spring load[1] F_1 ~ [N]	F_2 ~ [N]	min. [°C]	max. [°C]	Location hole joint connection F8 / press fit H9 [mm]	[g]	Art. No.
body and ball from stainless steel										
4	2,0	11	0,50	4,8	6,8	-30	90	4	0,6	22081.0315
5	2,5	13	0,70	6,3	10,0	-30	90	5	1,2	22081.0320
6	3,5	15	0,95	16,0	24,0	-30	90	6	2,0	22081.0325
8	4,5	18	1,40	18,8	31,7	-30	90	8	4,3	22081.0327
10	6,5	20	2,50	24,0	49,0	-30	90	10	7,1	22081.0330
12	8,5	22	3,10	38,0	68,0	-30	90	12	11,0	22081.0332

[1] statistical average value

Holders • for spring plungers

EH 22082.

PRODUCT DESCRIPTION

Holders are used to mount spring plungers, smooth, with collar (EH 22080.) on the side.

Material

- Zinc die-cast, nickel-plated

Assembly

The left and right hand versions (picture 1 / picture 3) are attached using only one screw, and are also provided with an anti-turn locking device.

MORE INFORMATION

References

Suitable for spring plungers, smooth, with collar and ball (EH 22080.)

DRAWING

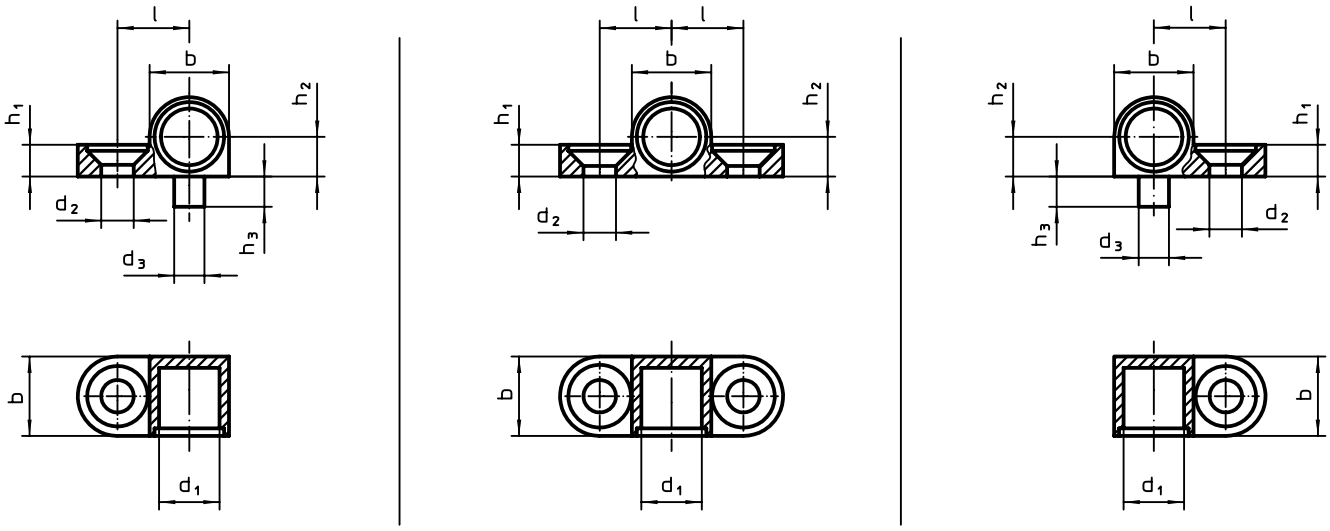

picture 1 picture 2 picture 3

ORDER INFORMATION

Dimensions								Suitable screw		Art. No.
d_1	d_2	d_3 -0,05	b	h_1	h_2 ±0,05	h_3	l ±0,05			
[mm]								[mm]	[g]	
left – picture 1										
6	3,2	3	8,5	3,2	4,25	3	7,5	M3	3	22082.0006
8	4,3	4	10,5	4,2	5,25	4	9,5	M4	5	22082.0008
two-sided – picture 2										
6	3,2	–	8,5	3,2	4,25	–	7,5	M3	4	22082.0106
8	4,3	–	10,5	4,2	5,25	–	9,5	M4	6	22082.0108
right – picture 3										
6	3,2	3	8,5	3,2	4,25	3	7,5	M3	3	22082.0206
8	4,3	4	10,5	4,2	5,25	4	9,5	M4	5	22082.0208

APPLICATION EXAMPLE

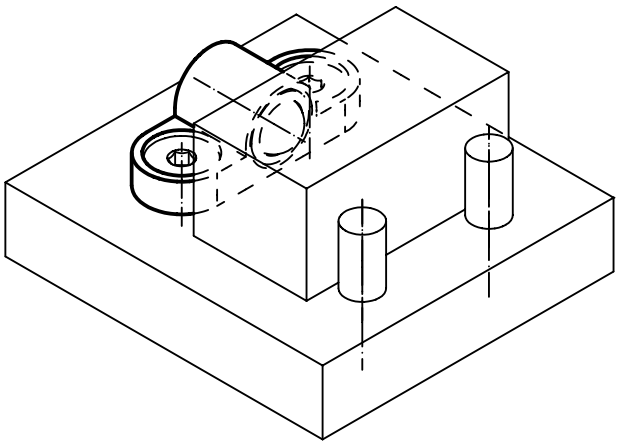

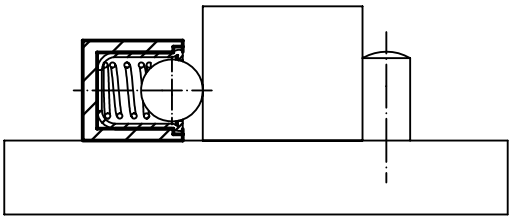

2

Spring Plungers • double-sided

EH 22090.

PRODUCT DESCRIPTION

To be used for locating and securing, as well as electric connection.

Material

Body
- Brass

Ball
- Stainless steel, hardened

Spring
- Stainless steel

MORE INFORMATION

Notes

Special types on request.
Spring plungers are specially tested for spring range and forces.

References

Calculation of indexing resistance, see details at the start of the section.

DRAWING

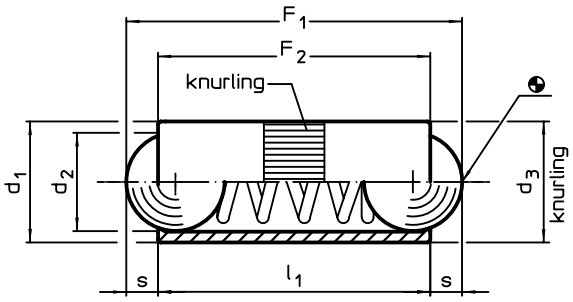

ORDER INFORMATION

Dimensions d_1	d_2	d_3	l_1	Stroke s	Spring load[1] F_1 ~	F_2 ~	max.	Location hole H8		Art. No.
[mm]				[mm]	[N]		[°C]	[mm]	[g]	
2,5	2,0	2,52	5,3	0,65	1,3	2,5	250	2,5	0,22	22090.0025
3,0	2,5	3,02	7,3	0,80	2,0	4,5	250	3,0	0,34	22090.0030
4,0	3,0	4,03	9,0	0,90	2,5	7,5	250	4,0	0,65	22090.0040
5,0	4,0	5,03	10,8	1,20	3,5	8,0	250	5,0	1,27	22090.0050
6,0	5,0	6,03	12,6	1,60	3,5	10,5	250	6,0	1,99	22090.0060
7,0	6,0	7,03	14,0	2,00	4,0	12,0	250	7,0	3,00	22090.0070
8,0	6,5	8,03	18,0	2,10	6,0	15,0	250	8,0	5,10	22090.0080

[1] statistical average value

APPLICATION EXAMPLE

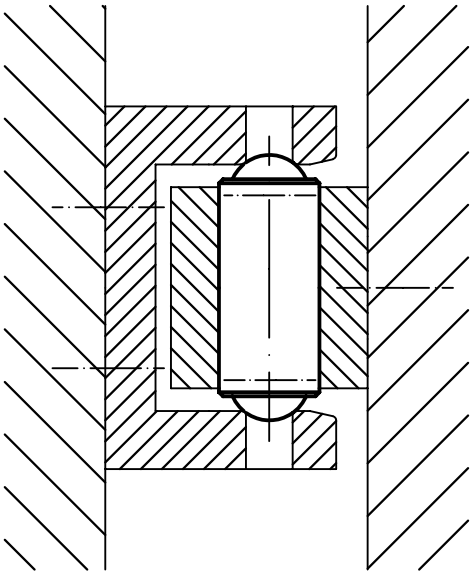

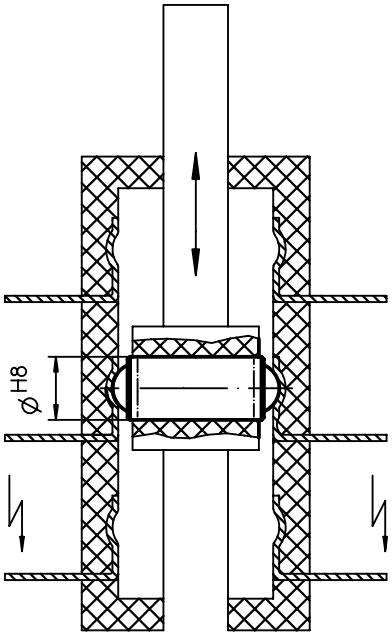

Spring Bodies

EH 22100.

PRODUCT DESCRIPTION

Spring bodies can be used for locating.

Material

Body
- Steel, nickel-plated
- Stainless steel A2

Spring
- Stainless steel 1.4310

MORE INFORMATION

Notes

Special springs on request.

DRAWING

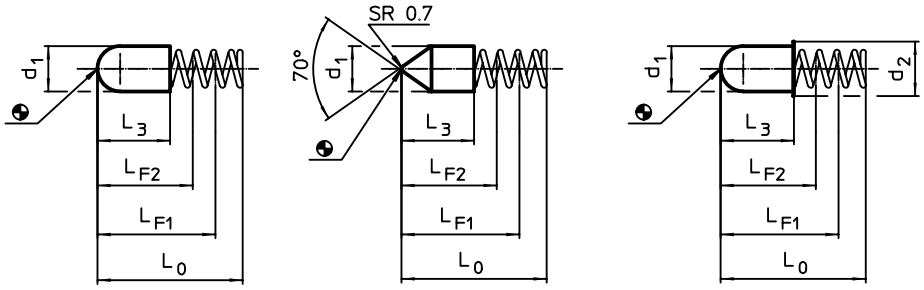

picture 1 picture 2 picture 3

ORDER INFORMATION

Dimensions						Stroke s	Spring load[1]		Spring rate	max.		Art. No.
d_1 ±0,05	l_0	d_2	L for F_1	L for F_2	L_3		F_1 ~	F_2 ~				
[mm]						[mm]	[N]		[N/mm]	[°C]	[g]	
body from steel, round – picture 1												
2,2	**16**	–	12,0	10,5	7,8	1,5	2,2	3,0	0,53	250	0,13	22100.0012
2,6	**8**	–	6,5	5,2	3,8	1,3	1,1	2,0	0,70	250	0,07	22100.0016
3,0	**12**	–	9,0	8,7	6,0	0,3	6,2	6,8	2,00	250	0,18	22100.0022
	16	–	13,0	10,7	8,5	2,3	4,8	8,4	1,60	250	0,23	22100.0024
3,4	**12**	–	9,0	7,8	6,0	1,2	5,0	7,0	1,69	250	0,18	22100.0034
	15	–	12,0	8,2	7,3	3,8	5,9	13,3	1,95	250	0,22	22100.0036
4,0	**14**	–	12,0	9,0	8,0	3,0	5,0	12,3	2,45	250	0,41	22100.0042
5,0	**16**	–	13,0	10,4	8,0	2,6	8,0	15,0	2,70	250	0,59	22100.0052
body from stainless steel, round – picture 1												
3,0	**16**	–	13,0	10,6	8,0	2,4	4,8	8,6	1,60	250	0,22	22100.0124
3,6	**18**	–	15,0	11,5	9,0	1,5	6,7	14,5	2,24	250	0,36	22100.0137
4,0	**16**	–	13,0	11,4	7,5	1,6	8,0	12,3	2,70	250	0,37	22100.0144
body from steel, tipped – picture 2												
2,2	**16**	–	12,0	10,5	7,8	1,5	2,2	3,0	0,53	250	0,12	22100.0212
3,0	**11**	–	9,0	6,7	5,0	2,3	1,6	3,4	0,78	250	0,11	22100.0222
	16	–	13,0	10,7	8,5	2,3	4,8	8,4	1,60	250	0,23	22100.0224
body from stainless steel, round, with collar – picture 3												
3,0	**13**	4,1	10,0	8,9	7,0	1,1	5,3	7,2	1,75	250	0,19	22100.0373

[1] statistical average value

APPLICATION EXAMPLE

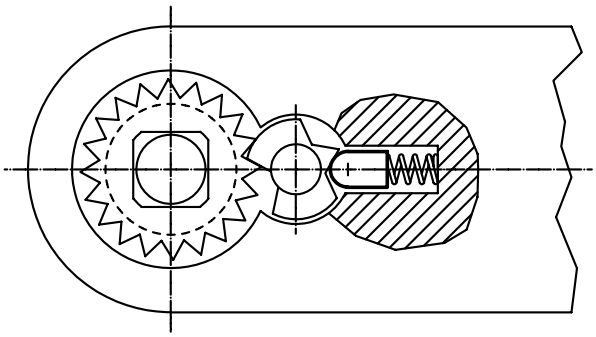

2

SPRING PLUNGERS

INCH MODELS

CALCULATION OF INDEXING RESISTANCE

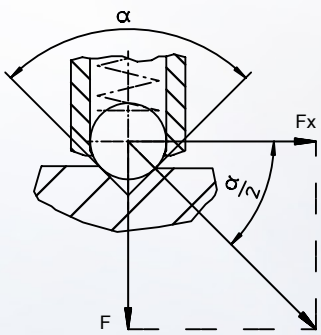

$$Fx = \frac{F}{\tan \frac{\alpha}{2}}$$

Example of calculation for:
α = 60°, Fx = 1,732 x F
α = 90°, Fx = F
α = 120°, Fx = 0,577 x F

light spring load

standard spring load

heavy spring load

www.halder.com/
SpringPlungers-Video

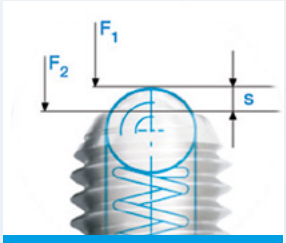

CERTIFIED

Certified spring load F1 and F2 and stroke s.

PREMIUM QUALITY

First-rate quality and minimum wear thanks to the use of hardened pins.

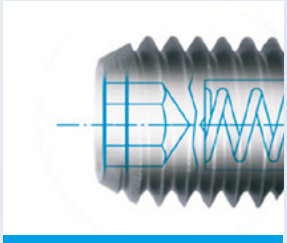

SECURE

Outstanding functional reliability thanks to - among other things - the assembly procedure used and a specific manufacturing process.

CLEAR

Coherent, uniform and clearly visible identification of the spring load thanks to a permanent marking on the body.

Spring Plungers • with pin and slot - INCH

EH 2B020.

PRODUCT DESCRIPTION

To be used for positioning, indexing, locking, latching as well as for other similar pressure applications.
Spring plungers can be used for locating or for applying pressure, as a detent or for ejection.

Material

Pin
- Free cutting steel, hardened, blackened
- Stainless steel 1.4305 (ASTM-A-582)

Body
- Free cutting steel, blackened
- Stainless steel 1.4305 (ASTM-A-582)

Spring
- Stainless steel

Characteristic

Standard spring load: no marking
Heavy spring load: marked with two lines

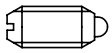

Standard spring load

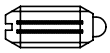

Heavy spring load

MORE INFORMATION

Notes

Special types on request.
Spring plungers are specially tested for spring range and forces.
- This product is manufactured in INCH dimensions.

References

A conversion table can be found in the technical data following these product information pages.
Thread lock: polyamide spot coating (for details please refer to the technical data pages).

DRAWING

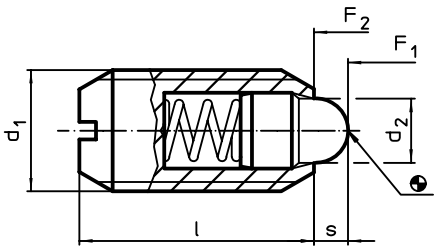

ORDER INFORMATION

Dimensions				Stroke s	Spring load[1]					Art. No.	
d_1	Thread	d_2	l		F_1 ~	F_2 ~	min.	max.		without thread lock	with thread lock
		[inch]		[inch]	[lb]		[°F]		[oz]		
free cutting steel, standard spring load											
6-32	2A-UNC	0,046	3/8	0,063	0,5	1,5	-22	482	0,021	2B020.0033	–
								194	0,021	–	2B020.0233
8-32	2A-UNC	0,070	7/16	0,052	0,8	1,5	-22	482	0,032	2B020.0036	–
								194	0,032	–	2B020.0236
8-36	2A-UNF	0,070	7/16	0,052	0,8	1,5	-22	482	0,032	2B020.0038	–
								194	0,032	–	2B020.0238
10-32	2A-UNF	0,093	15/32	0,065	1,0	2,5	-22	482	0,042	2B020.0040	–
								194	0,042	–	2B020.0240
1/4-20	2A-UNC	0,119	17/32	0,078	1,1	3,5	-22	482	0,074	2B020.0042	–
								194	0,074	–	2B020.0242
5/16-18	2A-UNC	0,135	37/64	0,084	1,0	4,0	-22	482	0,123	2B020.0046	–
								194	0,123	–	2B020.0246
3/8-16	2A-UNC	0,186	5/8	0,110	1,5	4,5	-22	482	0,187	2B020.0048	–
								194	0,187	–	2B020.0248
1/2-13	2A-UNC	0,248	3/4	0,151	1,8	5,5	-22	482	0,377	2B020.0050	–
								194	0,377	–	2B020.0250
5/8-11	2A-UNC	0,310	1 1/16	0,215	2,0	8,5	-22	482	0,885	2B020.0052	–
								194	0,885	–	2B020.0252

[1] statistical average value

→

Dimensions				Stroke	Spring load[1]					Art. No.	
d_1	Thread	d_2	l	s	F_1 ~	F_2 ~	min.	max.		without thread lock	with thread lock
		[inch]		[inch]	[lb]		[°F]		[oz]		
free cutting steel, heavy spring load											
6-32	2A-UNC	0,046	3/8	0,063	0,5	2,5	-22	482	0,018	2B020.0063	–
								194	0,018	–	2B020.0263
8-32	2A-UNC	0,070	7/16	0,052	1,8	4,6	-22	482	0,032	2B020.0066	–
								194	0,032	–	2B020.0266
8-36	2A-UNF	0,070	7/16	0,052	1,8	4,6	-22	482	0,032	2B020.0068	–
								194	0,032	–	2B020.0268
10-32	2A-UNF	0,093	15/32	0,065	2,6	6,3	-22	482	0,042	2B020.0070	–
								194	0,042	–	2B020.0270
1/4-20	2A-UNC	0,119	17/32	0,078	3,0	9,7	-22	482	0,074	2B020.0072	–
								194	0,074	–	2B020.0272
5/16-18	2A-UNC	0,135	37/64	0,084	3,8	13,0	-22	482	0,123	2B020.0076	–
								194	0,123	–	2B020.0276
3/8-16	2A-UNC	0,186	5/8	0,110	4,5	16,0	-22	482	0,190	2B020.0078	–
								194	0,190	–	2B020.0278
1/2-13	2A-UNC	0,248	3/4	0,151	5,0	22,4	-22	482	0,384	2B020.0080	–
								194	0,384	–	2B020.0280
5/8-11	2A-UNC	0,310	1 1/16	0,215	7,0	43,5	-22	482	0,907	2B020.0082	–
								194	0,907	–	2B020.0282
stainless steel, standard spring load											
6-32	2A-UNC	0,046	3/8	0,063	0,5	1,5	-22	482	0,021	2B020.0133	–
								194	0,021	–	2B020.0333
8-32	2A-UNC	0,070	7/16	0,052	0,8	1,5	-22	482	0,032	2B020.0136	–
								194	0,032	–	2B020.0336
8-36	2A-UNF	0,070	7/16	0,052	0,8	1,5	-22	482	0,032	2B020.0138	–
								194	0,032	–	2B020.0338
10-32	2A-UNF	0,093	15/32	0,065	1,0	2,5	-22	482	0,042	2B020.0140	–
								194	0,042	–	2B020.0340
1/4-20	2A-UNC	0,119	17/32	0,078	1,1	3,5	-22	482	0,074	2B020.0142	–
								194	0,074	–	2B020.0342
5/16-18	2A-UNC	0,135	37/64	0,084	1,0	4,0	-22	482	0,123	2B020.0146	–
								194	0,123	–	2B020.0346
3/8-16	2A-UNC	0,186	5/8	0,110	1,5	4,5	-22	482	0,190	2B020.0148	–
								194	0,190	–	2B020.0348
1/2-13	2A-UNC	0,248	3/4	0,151	1,8	5,5	-22	482	0,388	2B020.0150	–
								194	0,388	–	2B020.0350
5/8-11	2A-UNC	0,310	1 1/16	0,215	2,0	8,5	-22	482	0,892	2B020.0152	–
								194	0,892	–	2B020.0352
stainless steel, heavy spring load											
6-32	2A-UNC	0,046	3/8	0,063	0,5	2,5	-22	482	0,014	2B020.0163	–
								194	0,014	–	2B020.0363
8-32	2A-UNC	0,070	7/16	0,052	1,8	4,6	-22	482	0,032	2B020.0166	–
								194	0,032	–	2B020.0366
8-36	2A-UNF	0,070	7/16	0,052	1,8	4,6	-22	482	0,032	2B020.0168	–
								194	0,032	–	2B020.0368
10-32	2A-UNF	0,093	15/32	0,065	2,6	6,3	-22	482	0,042	2B020.0170	–
								194	0,042	–	2B020.0370
1/4-20	2A-UNC	0,119	17/32	0,078	3,0	9,7	-22	482	0,071	2B020.0172	–
								194	0,071	–	2B020.0372
5/16-18	2A-UNC	0,135	37/64	0,084	3,8	13,0	-22	482	0,123	2B020.0176	–
								194	0,123	–	2B020.0376
3/8-16	2A-UNC	0,186	5/8	0,110	4,5	16,0	-22	482	0,194	2B020.0178	–
								194	0,194	–	2B020.0378
1/2-13	2A-UNC	0,248	3/4	0,151	5,0	22,4	-22	482	0,399	2B020.0180	–
								194	0,399	–	2B020.0380
5/8-11	2A-UNC	0,310	1 1/16	0,215	7,0	43,5	-22	482	0,914	2B020.0182	–
								194	0,914	–	2B020.0382

[1] statistical average value

APPLICATION EXAMPLE

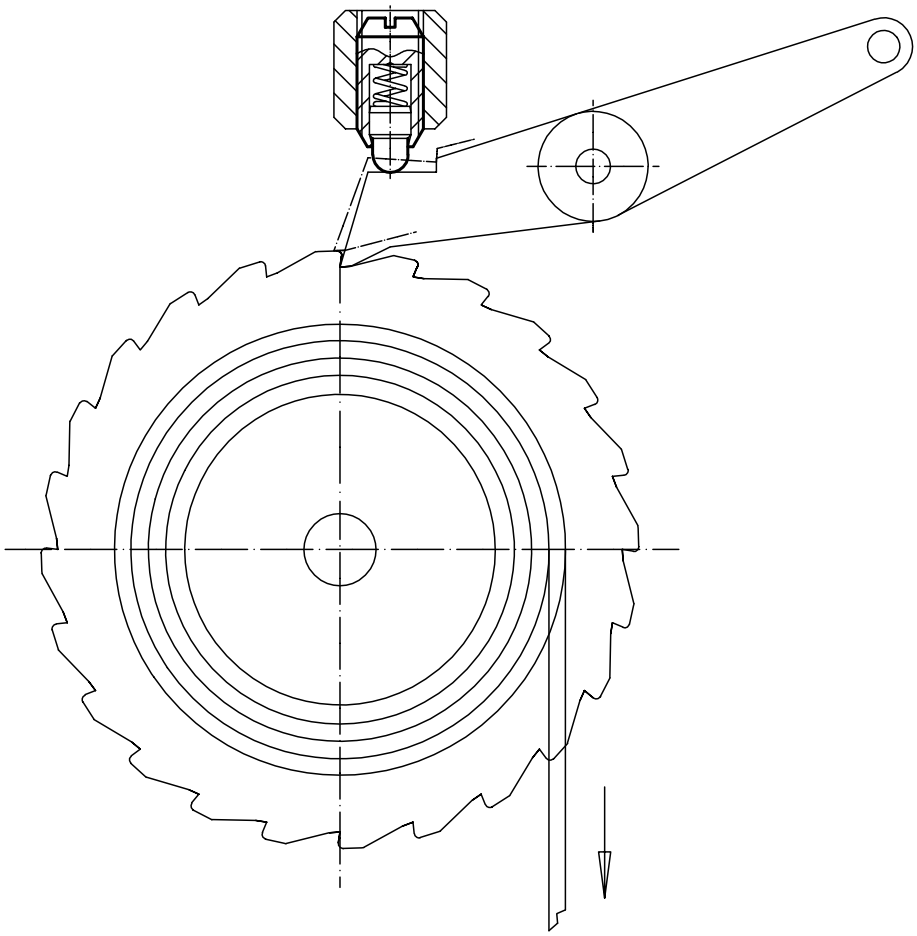

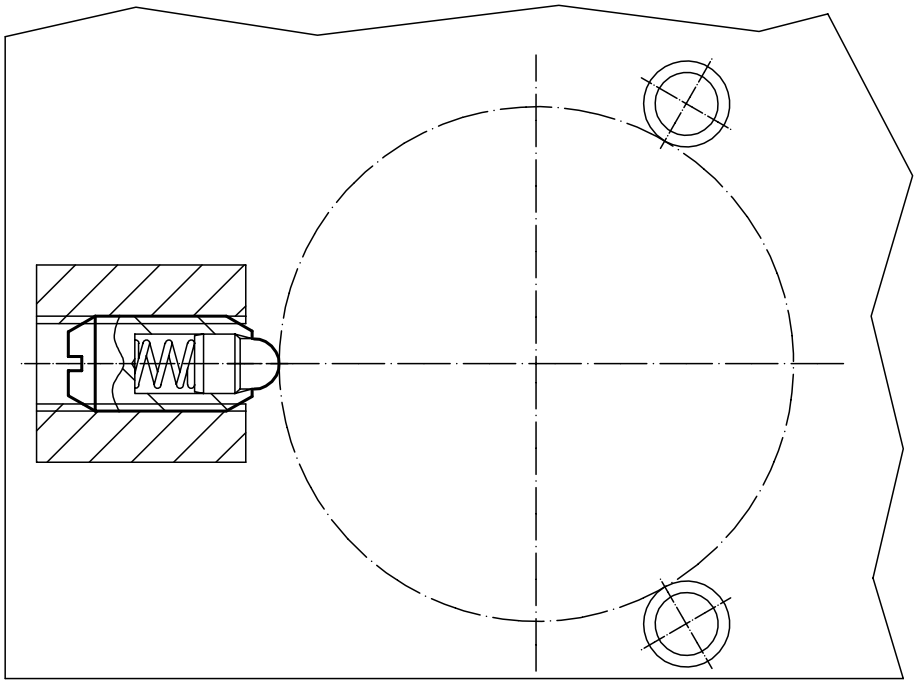

2

Spring Plungers • with pin and internal hexagon - INCH

EH 2B030.

PRODUCT DESCRIPTION

To be used for positioning, indexing, locking, latching as well as for other similar pressure applications.
Spring plungers can be used for locating or for applying pressure, as a detent or for ejection.

Material

Pin
- Free cutting steel, hardened, blackened
- Stainless steel 1.4305 (ASTM-A-582)

Body
- Free cutting steel, blackened
- Stainless steel 1.4305 (ASTM-A-582)

Spring
- Stainless steel

Characteristic

Standard spring load: no marking
Heavy spring load: marked with two lines

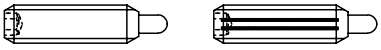

Standard spring load Heavy spring load

MORE INFORMATION

Notes

Special types on request.
Spring plungers are specially tested for spring range and forces.
- This product is manufactured in INCH dimensions.

References

A conversion table can be found in the technical data following these product information pages.
Thread lock: polyamide spot coating (for details please refer to the technical data pages).

DRAWING

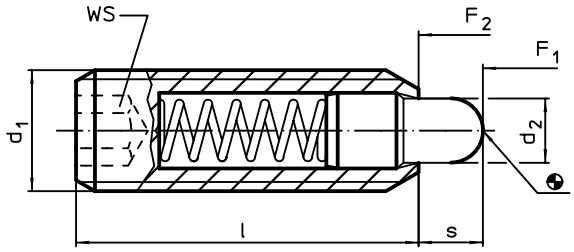

ORDER INFORMATION

Dimensions				WS	Stroke s	Spring load[1]					Art. No.	
d_1	Thread	d_2	l			F_1 ~	F_2 ~	min.	max.		without thread lock	with thread lock
		[inch]		[inch]	[inch]	[lb]		[°F]		[oz]		
free cutting steel, standard spring load												
6-32	2A-UNC	0,046	17/32	1/16	0,063	0,5	1,5	-22	482	0,025	2B030.0033	–
									194	0,025	–	2B030.0233
8-32	2A-UNC	0,070	5/8	5/64	0,094	0,8	2,3	-22	482	0,042	2B030.0036	–
									194	0,042	–	2B030.0236
10-32	2A-UNF	0,093	3/4	3/32	0,125	1,4	2,7	-22	482	0,063	2B030.0040	–
									194	0,063	–	2B030.0240
1/4-20	2A-UNC	0,119	1	1/8	0,188	1,0	4,0	-22	482	0,134	2B030.0042	–
									194	0,134	–	2B030.0242
1/4-28	2A-UNF	0,119	1	1/8	0,188	1,0	4,0	-22	482	0,145	2B030.0044	–
									194	0,145	–	2B030.0244
5/16-18	2A-UNC	0,135	1	5/32	0,188	1,5	4,5	-22	482	0,205	2B030.0046	–
									194	0,205	–	2B030.0246
3/8-16	2A-UNC	0,186	1 1/8	3/16	0,188	2,7	7,2	-22	482	0,335	2B030.0048	–
									194	0,335	–	2B030.0248
1/2-13	2A-UNC	0,248	1 1/4	1/4	0,250	2,7	9,3	-22	482	0,656	2B030.0050	–
									194	0,656	–	2B030.0250
5/8-11	2A-UNC	0,310	1 1/2	5/16	0,313	3,5	10,6	-22	482	1,242	2B030.0052	–
									194	1,242	–	2B030.0252
3/4-10	2A-UNC	0,374	1 3/4	3/8	0,313	5,5	14,5	-22	482	2,152	2B030.0053	–
									194	2,152	–	2B030.0253
1-8	2A-UNC	0,499	2 13/32	3/8	0,500	4,0	31,0	-22	482	5,443	2B030.0054	–
									194	5,443	–	2B030.0254

[1] statistical average value

→

Dimensions				WS	Stroke s	Spring load[1]					Art. No.	
d_1	Thread	d_2	l			F_1 ~	F_2 ~	min.	max.		without thread lock	with thread lock
		[inch]		[inch]	[inch]	[lb]		[°F]		[oz]		
free cutting steel, heavy spring load												
6-32	2A-UNC	0,046	17/32	1/16	0,063	1,5	3,4	-22	482	0,026	2B030.0063	–
									194	0,026	–	2B030.0263
8-32	2A-UNC	0,070	5/8	5/64	0,094	2,6	6,6	-22	482	0,042	2B030.0066	–
									194	0,042	–	2B030.0266
10-32	2A-UNF	0,093	3/4	3/32	0,125	3,2	9,0	-22	482	0,067	2B030.0070	–
									194	0,067	–	2B030.0270
1/4-20	2A-UNC	0,119	1	1/8	0,188	3,1	10,1	-22	482	0,134	2B030.0072	–
									194	0,134	–	2B030.0272
1/4-28	2A-UNF	0,119	1	1/8	0,188	3,1	10,1	-22	482	0,145	2B030.0074	–
									194	0,145	–	2B030.0274
5/16-18	2A-UNC	0,135	1	5/32	0,188	3,0	15,0	-22	482	0,207	2B030.0076	–
									194	0,207	–	2B030.0276
3/8-16	2A-UNC	0,186	1 1/8	3/16	0,188	5,5	12,7	-22	482	0,335	2B030.0078	–
									194	0,335	–	2B030.0278
1/2-13	2A-UNC	0,248	1 1/4	1/4	0,250	6,6	16,0	-22	482	0,649	2B030.0080	–
									194	0,649	–	2B030.0280
5/8-11	2A-UNC	0,310	1 1/2	5/16	0,313	10,5	22,2	-22	482	1,245	2B030.0082	–
									194	1,245	–	2B030.0282
3/4-10	2A-UNC	0,374	1 3/4	3/8	0,313	6,7	33,0	-22	482	2,187	2B030.0083	–
									194	2,187	–	2B030.0283
1-8	2A-UNC	0,499	2 13/32	3/8	0,500	16,0	60,0	-22	482	5,538	2B030.0084	–
									194	5,538	–	2B030.0284
stainless steel, standard spring load												
6-32	2A-UNC	0,046	17/32	1/16	0,063	0,5	1,5	-22	482	0,018	2B030.0133	–
									194	0,018	–	2B030.0333
8-32	2A-UNC	0,070	5/8	5/64	0,094	0,8	2,3	-22	482	0,039	2B030.0136	–
									194	0,039	–	2B030.0336
10-32	2A-UNF	0,093	3/4	3/32	0,125	1,4	2,7	-22	482	0,063	2B030.0140	–
									194	0,063	–	2B030.0340
1/4-20	2A-UNC	0,119	1	1/8	0,188	1,0	4,0	-22	482	0,131	2B030.0142	–
									194	0,131	–	2B030.0342
1/4-28	2A-UNF	0,119	1	1/8	0,188	1,0	4,0	-22	482	0,141	2B030.0144	–
									194	0,141	–	2B030.0344
5/16-18	2A-UNC	0,135	1	5/32	0,188	1,5	4,5	-22	482	0,208	2B030.0146	–
									194	0,208	–	2B030.0346
3/8-16	2A-UNC	0,186	1 1/8	3/16	0,188	2,7	7,2	-22	482	0,328	2B030.0148	–
									194	0,328	–	2B030.0348
1/2-13	2A-UNC	0,248	1 1/4	1/4	0,250	2,7	9,3	-22	482	0,653	2B030.0150	–
									194	0,653	–	2B030.0350
5/8-11	2A-UNC	0,310	1 1/2	5/16	0,313	3,5	10,6	-22	482	1,242	2B030.0152	–
									194	1,242	–	2B030.0352
3/4-10	2A-UNC	0,374	1 3/4	3/8	0,313	5,5	14,5	-22	482	2,180	2B030.0153	–
									194	2,180	–	2B030.0353
1-8	2A-UNC	0,499	2 13/32	3/8	0,500	4,0	31,0	-22	482	5,474	2B030.0154	–
									194	5,474	–	2B030.0354

[1] statistical average value

Dimensions				WS	Stroke s	Spring load[1]					Art. No.	
d_1	Thread	d_2	l			F_1 ~	F_2 ~	min.	max.		without thread lock	with thread lock
		[inch]		[inch]	[inch]	[lb]		[°F]		[oz]		
stainless steel, heavy spring load												
6-32	2A-UNC	0,046	17/32	1/16	0,063	1,5	3,4	-22	482	0,025	2B030.0163	–
									194	0,025	–	2B030.0363
8-32	2A-UNC	0,070	5/8	5/64	0,094	2,6	6,6	-22	482	0,042	2B030.0166	–
									194	0,042	–	2B030.0366
10-32	2A-UNF	0,093	3/4	3/32	0,125	3,2	9,0	-22	482	0,063	2B030.0170	–
									194	0,063	–	2B030.0370
1/4-20	2A-UNC	0,119	1	1/8	0,188	3,1	10,1	-22	482	0,131	2B030.0172	–
									194	0,131	–	2B030.0372
1/4-28	2A-UNF	0,119	1	1/8	0,188	3,1	10,1	-22	482	0,145	2B030.0174	–
									194	0,145	–	2B030.0374
5/16-18	2A-UNC	0,135	1	5/32	0,188	3,0	15,0	-22	482	0,212	2B030.0176	–
									194	0,212	–	2B030.0376
3/8-16	2A-UNC	0,186	1 1/8	3/16	0,188	5,5	12,7	-22	482	0,339	2B030.0178	–
									194	0,339	–	2B030.0378
1/2-13	2A-UNC	0,248	1 1/4	1/4	0,250	6,6	16,0	-22	482	0,653	2B030.0180	–
									194	0,653	–	2B030.0380
5/8-11	2A-UNC	0,310	1 1/2	5/16	0,313	10,5	22,2	-22	482	1,252	2B030.0182	–
									194	1,252	–	2B030.0382
3/4-10	2A-UNC	0,374	1 3/4	3/8	0,313	6,7	33,0	-22	482	2,198	2B030.0183	–
									194	2,198	–	2B030.0383
1-8	2A-UNC	0,499	2 13/32	3/8	0,500	16,0	60,0	-22	482	5,524	2B030.0184	–
									194	5,524	–	2B030.0384

[1] statistical average value

APPLICATION EXAMPLE

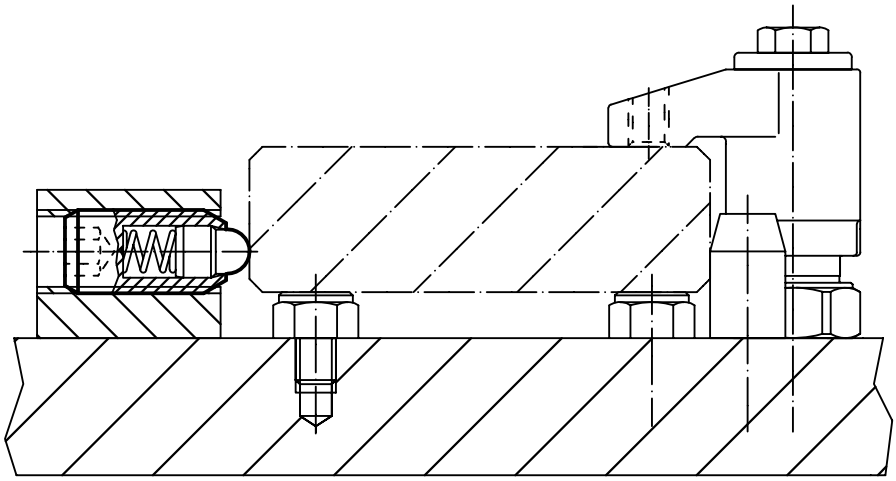

Spring Plungers • with ball and slot - INCH

EH 2B050.

PRODUCT DESCRIPTION

To be used for positioning, indexing, locking, latching as well as for other similar pressure applications.
Spring plungers can be used for locating or for applying pressure, as a detent or for ejection.

Material

Body
- Free cutting steel, blackened
- Stainless steel 1.4305 (ASTM-A-582)

Ball
- Stainless steel, hardened

Spring
- Stainless steel

Characteristic

Light spring load: marked with one line
Standard spring load: no marking
Heavy spring load: marked with two lines

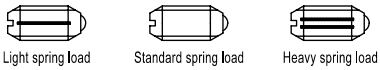

MORE INFORMATION

Notes

Special types on request.
Spring plungers are specially tested for spring range and forces.
- This product is manufactured in INCH dimensions.

References

A conversion table can be found in the technical data following these product information pages.
Thread lock: polyamide spot coating (for details please refer to the technical data pages).
Calculation of indexing resistance, see details at the start of the section.

DRAWING

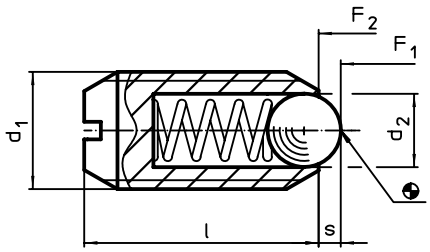

ORDER INFORMATION

Dimensions				Stroke s	Spring load[1]					Art. No.	
d_1	Thread	d_2	l		F_1 ~	F_2 ~	min.	max.		without thread lock	with thread lock
		[inch]		[inch]	[lb]		[°F]		[oz]		
free cutting steel, light spring load											
10-32	2A-UNF	3/32	33/64	0,025	0,9	1,5	-22	482	0,049	2B050.0010	–
								194	0,049	–	2B050.0210
1/4-20	2A-UNC	1/8	17/32	0,035	2,1	4,0	-22	482	0,074	2B050.0012	–
								194	0,074	–	2B050.0212
5/16-18	2A-UNC	5/32	37/64	0,040	2,0	4,6	-22	482	0,123	2B050.0016	–
								194	0,123	–	2B050.0216
3/8-16	2A-UNC	3/16	5/8	0,048	2,5	5,0	-22	482	0,193	2B050.0018	–
								194	0,193	–	2B050.0218
1/2-13	2A-UNC	9/32	3/4	0,072	3,0	6,0	-22	482	0,397	2B050.0020	–
								194	0,397	–	2B050.0220
5/8-11	2A-UNC	3/8	63/64	0,096	4,5	9,0	-22	482	0,787	2B050.0022	–
								194	0,787	–	2B050.0222

[1] statistical average value

Dimensions				Stroke	Spring load[1]					Art. No.	
d_1	Thread	d_2	l	s	F_1 ~	F_2 ~	min.	max.		without thread lock	with thread lock
		[inch]		[inch]	[lb]		[°F]		[oz]		
free cutting steel, standard spring load											
4-48	2A-UNF	1/16	3/16	0,020	0,1	0,5	-22	482	0,008	2B050.0031	–
								194	0,008	–	2B050.0231
5-40	2A-UNC	1/16	1/4	0,020	0,3	0,8	-22	482	0,016	2B050.0032	–
								194	0,016	–	2B050.0232
6-32	2A-UNC	5/64	5/16	0,023	0,5	1,0	-22	482	0,020	2B050.0033	–
								194	0,020	–	2B050.0233
6-40	2A-UNF	5/64	5/16	0,023	0,5	1,0	-22	482	0,020	2B050.0035	–
								194	0,020	–	2B050.0235
8-32	2A-UNC	3/32	11/32	0,025	0,8	1,3	-22	482	0,026	2B050.0036	–
								194	0,026	–	2B050.0236
8-36	2A-UNF	3/32	11/32	0,025	0,8	1,3	-22	482	0,026	2B050.0038	–
								194	0,026	–	2B050.0238
10-32	2A-UNF	3/32	33/64	0,025	2,0	3,1	-22	482	0,049	2B050.0040	–
								194	0,049	–	2B050.0240
1/4-20	2A-UNC	1/8	17/32	0,035	3,8	6,8	-22	482	0,073	2B050.0042	–
								194	0,073	–	2B050.0242
5/16-18	2A-UNC	5/32	37/64	0,040	4,0	8,4	-22	482	0,123	2B050.0046	–
								194	0,123	–	2B050.0246
3/8-16	2A-UNC	3/16	5/8	0,048	5,0	10,3	-22	482	0,198	2B050.0048	–
								194	0,198	–	2B050.0248
1/2-13	2A-UNC	9/32	3/4	0,072	6,0	12,0	-22	482	0,406	2B050.0050	–
								194	0,406	–	2B050.0250
5/8-11	2A-UNC	3/8	63/64	0,096	9,0	18,0	-22	482	0,811	2B050.0052	–
								194	0,811	–	2B050.0252
free cutting steel, heavy spring load											
10-32	2A-UNF	3/32	33/64	0,025	3,3	4,8	-22	482	0,049	2B050.0070	–
								194	0,049	–	2B050.0270
1/4-20	2A-UNC	1/8	17/32	0,035	5,6	8,6	-22	482	0,073	2B050.0072	–
								194	0,073	–	2B050.0272
5/16-18	2A-UNC	5/32	37/64	0,040	6,0	11,1	-22	482	0,122	2B050.0076	–
								194	0,122	–	2B050.0276
3/8-16	2A-UNC	3/16	5/8	0,048	7,5	15,1	-22	482	0,196	2B050.0078	–
								194	0,196	–	2B050.0278
1/2-13	2A-UNC	9/32	3/4	0,072	6,0	24,0	-22	482	0,408	2B050.0080	–
								194	0,408	–	2B050.0280
5/8-11	2A-UNC	3/8	63/64	0,096	7,0	40,0	-22	482	0,825	2B050.0082	–
								194	0,825	–	2B050.0282
stainless steel, light spring load											
10-32	2A-UNF	3/32	33/64	0,025	0,9	1,5	-22	482	0,048	2B050.0110	–
								194	0,048	–	2B050.0310
1/4-20	2A-UNC	1/8	17/32	0,035	2,1	4,0	-22	482	0,071	2B050.0112	–
								194	0,071	–	2B050.0312
5/16-18	2A-UNC	5/32	37/64	0,040	2,0	4,6	-22	482	0,123	2B050.0116	–
								194	0,123	–	2B050.0316
3/8-16	2A-UNC	3/16	5/8	0,048	2,5	5,0	-22	482	0,190	2B050.0118	–
								194	0,190	–	2B050.0318
1/2-13	2A-UNC	9/32	3/4	0,072	3,0	6,0	-22	482	0,397	2B050.0120	–
								194	0,397	–	2B050.0320
5/8-11	2A-UNC	3/8	63/64	0,096	4,5	9,0	-22	482	0,790	2B050.0122	–
								194	0,790	–	2B050.0322

[1] statistical average value

Dimensions				Stroke s	Spring load[1]					Art. No.	
d_1	Thread	d_2	l		F_1 ~	F_2 ~	min.	max.		without thread lock	with thread lock
		[inch]		[inch]	[lb]		[°F]		[oz]		
stainless steel, standard spring load											
4-48	2A-UNF	1/16	3/16	0,020	0,1	0,5	-22	482	0,005	2B050.0131	–
								194	0,005	–	2B050.0331
5-40	2A-UNC	1/16	1/4	0,020	0,3	0,8	-22	482	0,015	2B050.0132	–
								194	0,015	–	2B050.0332
6-32	2A-UNC	5/64	5/16	0,023	0,5	1,0	-22	482	0,018	2B050.0133	–
								194	0,018	–	2B050.0333
6-40	2A-UNF	5/64	5/16	0,023	0,5	1,0	-22	482	0,019	2B050.0135	–
								194	0,019	–	2B050.0335
8-32	2A-UNC	3/32	11/32	0,025	0,8	1,3	-22	482	0,026	2B050.0136	–
								194	0,026	–	2B050.0336
8-36	2A-UNF	3/32	11/32	0,025	0,8	1,3	-22	482	0,026	2B050.0138	–
								194	0,026	–	2B050.0338
10-32	2A-UNF	3/32	33/64	0,025	2,0	3,1	-22	482	0,049	2B050.0140	–
								194	0,049	–	2B050.0340
1/4-20	2A-UNC	1/8	17/32	0,035	3,8	6,8	-22	482	0,072	2B050.0142	–
								194	0,072	–	2B050.0342
5/16-18	2A-UNC	5/32	37/64	0,040	4,0	8,4	-22	482	0,123	2B050.0146	–
								194	0,123	–	2B050.0346
3/8-16	2A-UNC	3/16	5/8	0,048	5,0	10,3	-22	482	0,198	2B050.0148	–
								194	0,198	–	2B050.0348
1/2-13	2A-UNC	9/32	3/4	0,072	6,0	12,0	-22	482	0,396	2B050.0150	–
								194	0,396	–	2B050.0350
5/8-11	2A-UNC	3/8	63/64	0,096	9,0	18,0	-22	482	0,813	2B050.0152	–
								194	0,813	–	2B050.0352
stainless steel, heavy spring load											
10-32	2A-UNF	3/32	33/64	0,025	3,3	4,8	-22	482	0,046	2B050.0170	–
								194	0,046	–	2B050.0370
1/4-20	2A-UNC	1/8	17/32	0,035	5,6	8,6	-22	482	0,074	2B050.0172	–
								194	0,074	–	2B050.0372
5/16-18	2A-UNC	5/32	37/64	0,040	6,0	11,1	-22	482	0,123	2B050.0176	–
								194	0,123	–	2B050.0376
3/8-16	2A-UNC	3/16	5/8	0,048	7,5	15,1	-22	482	0,197	2B050.0178	–
								194	0,197	–	2B050.0378
1/2-13	2A-UNC	9/32	3/4	0,072	6,0	24,0	-22	482	0,409	2B050.0180	–
								194	0,409	–	2B050.0380
5/8-11	2A-UNC	3/8	63/64	0,096	7,0	40,0	-22	482	0,825	2B050.0182	–
								194	0,825	–	2B050.0382

[1] statistical average value

APPLICATION EXAMPLE

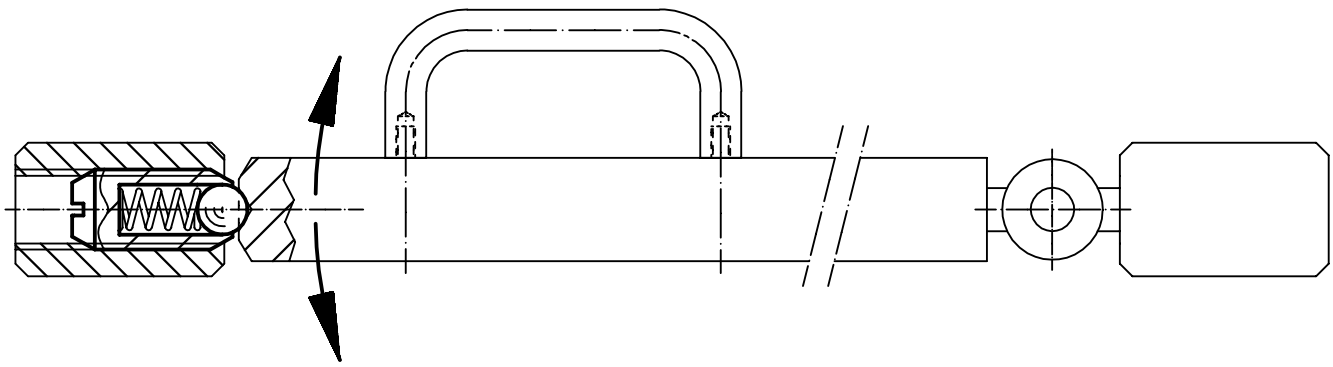

2

Spring Plungers • smooth, with collar and ball, self-clamping – INCH

EH 2B080.

PRODUCT DESCRIPTION

Spring plungers can be used for locating or for applying pressure, as a detent or for ejection. The spring plungers compensate tolerances of up to 0.008" (inches) of the locating hole by self-clamping. This saves costs in the machining of the locating hole.

Material

Body
- Thermoplastic POM, black

Ball
- Stainless steel, hardened

Spring
- Stainless steel

Assembly

Thanks to the flexible design of the body, a direct manual mounting and a secure overhead installation is possible.

MORE INFORMATION

Notes

Special types on request.
Spring plungers are specially tested for spring range and forces.

References

Calculation of indexing resistance, see details at the start of the section.

DRAWING

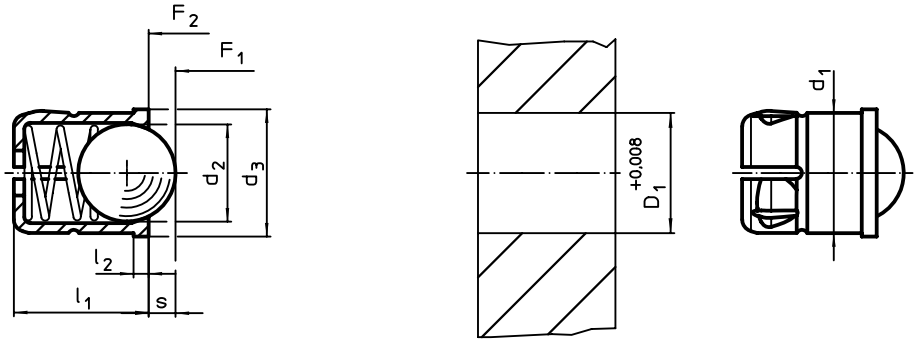

ORDER INFORMATION

Dimensions d_1 +0,004	d_2	d_3	l_1 ±0,01	l_2	Stroke s	Spring load[1] F_1	F_2	min.	max.	Location hole D_1 +0,008		Art. No.
[inch]					[inch]	[lb]		[°F]		[inch]	[oz]	
3/16	0,157	0,220	0,236	0,039	0,039	1,3	2,1	-22	122	3/16	0,01	2B080.0050
1/4	0,197	0,276	0,276	0,039	0,059	1,4	2,8	-22	122	1/4	0,02	2B080.0060
5/16	0,256	0,335	0,354	0,039	0,075	1,9	4,5	-22	122	5/16	0,05	2B080.0080
3/8	0,315	0,433	0,531	0,059	0,091	2,7	5,0	-22	122	3/8	0,10	2B080.0090
1/2	0,394	0,551	0,630	0,059	0,126	3,1	5,6	-22	122	1/2	0,18	2B080.0120

[1] statistical average value

CUSTOM PARTS - SPRING PLUNGERS

BARELY NOTICEABLE, YET INDISPENSABLE

Are you faced with an installation situation that requires a custom tool? We will find the solution! Apart from carrying an extensive selection of standard products, we also design custom solutions that are moulded to your specific requirements - even in small batches.

www.halder.com/ SpringPlungers-Video

2

Index Plungers Mini Indexes

EH 22110.

PRODUCT DESCRIPTION

Particularly suitable for screwing into thin walled pieces.
Performance in the smallest space requirements.

Material

Body
- Steel, zinc-plated by galvanization
- Stainless steel 1.4305

Locking pin
- Stainless steel 1.4305

Knob
- Thermoplastic PA 6, black, dull

Assembly

Screw in the mini index. By lifting the knob, the hexagon will be released for assembly.

The screw length can be adapted by distance collars for index plungers (EH 22120.).

Operation

When using the self-locking type the knob is pulled-out, turned 30° and secured by a notched catch.

MORE INFORMATION

Notes

Knob not removable.

Further products

Distance Collars, for index plungers . . → p. 122

DRAWING

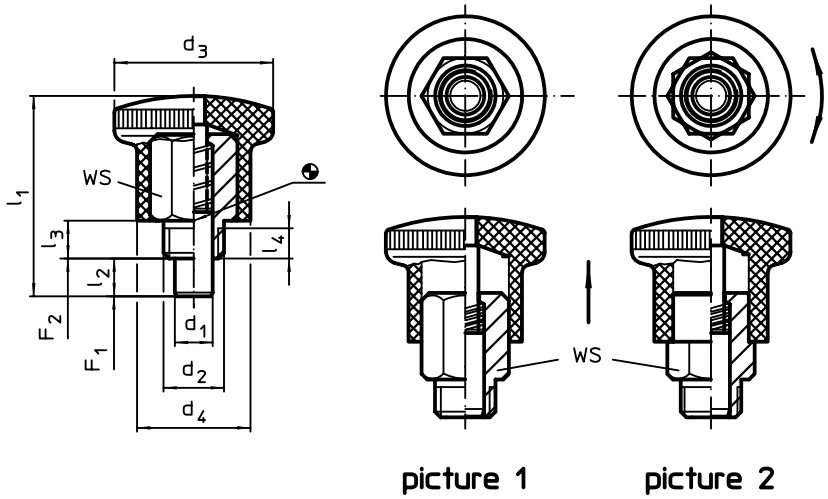

ORDER INFORMATION

Dimensions								WS	Spring load[1]					Art. No.	
d_1 0 -0,06	d_2	d_3	d_4	l_1	l_2 min.	l_3	l_4 min.		F_1 ~	F_2 ~	min.	max.		steel	stainless steel
[mm]								[mm]	[N]		[°C]		[g]		
without locking – picture 1															
4	M 8 x 0,75	21	15	26,5	5	5	3,5	10	4,5	12	-30	80	14	22110.0024	22110.0044
5	M 8 x 0,75	21	15	26,5	5	5	3,5	10	4,5	12	-30	80	14	22110.0026	22110.0046
6	M10 x 1	25	18	34,0	7	7	4,5	12	5,0	18	-30	80	25	22110.0028	22110.0048
7	M10 x 1	25	18	34,0	7	7	4,5	12	5,0	18	-30	80	26	22110.0030	22110.0050
with locking – picture 2															
4	M 8 x 0,75	21	15	26,5	5	5	3,5	10	4,5	12	-30	80	13	22110.0034	22110.0054
5	M 8 x 0,75	21	15	26,5	5	5	3,5	10	4,5	12	-30	80	14	22110.0036	22110.0056
6	M10 x 1	25	18	34,0	7	7	4,5	12	5,0	18	-30	80	24	22110.0038	22110.0058
7	M10 x 1	25	18	34,0	7	7	4,5	12	5,0	18	-30	80	25	22110.0040	22110.0060

[1] statistical average value

Index Plungers Mini Indexes • basic type

EH 22110.

PRODUCT DESCRIPTION

Particularly suitable for screwing into thin walled pieces.
Performance in the smallest space requirements.

Material

Body
- Steel, zinc-plated by galvanization
- Stainless steel 1.4305

Locking pin
- Stainless steel 1.4305

Knob
- Thermoplastic PA 6, black, dull

Assembly

Screw in the mini index. By lifting the knob, the hexagon will be released for assembly.

The screw length can be adapted by distance collars for index plungers (EH 22120.).

Operation

When using the self-locking type the knob is pulled-out, turned 30° and secured by a notched catch.

MORE INFORMATION

Notes

Knob not removable.

Further products

Distance Collars, for index plungers . . → p. 122

DRAWING

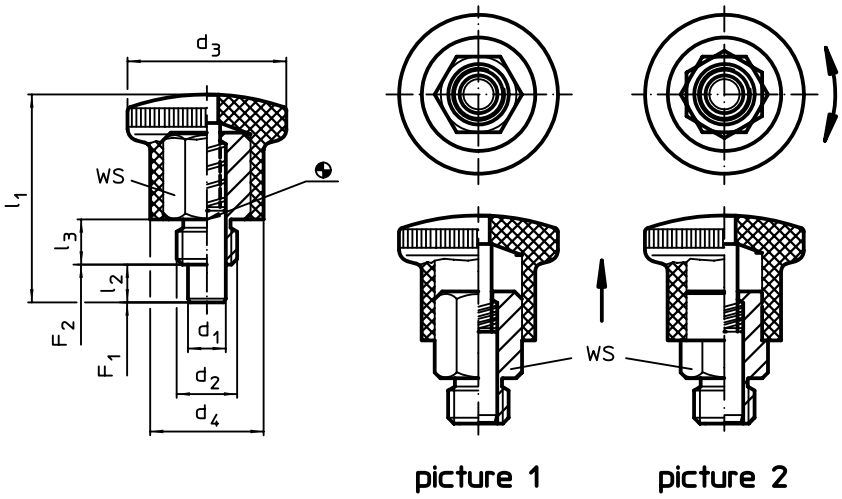

ORDER INFORMATION

Dimensions							WS	Spring load[1]					Art. No.	
d_1 h9	d_2	d_3	d_4	l_1	l_2 min.	l_3		F_1 ~	F_2 ~	min.	max.		steel	stainless steel
[mm]							[mm]	[N]		[°C]		[g]		
without locking – picture 1														
4	M 8	21	15	27,5	5	6	10	4	12	-30	80	14	22110.0602	22110.0702
	M 8 x 1	21	15	27,5	5	6	10	4	12	-30	80	14	22110.0604	22110.0704
5	M10	25	18	34,0	6	8	12	6	16	-30	80	25	22110.0606	22110.0706
	M10 x 1	25	18	34,0	6	8	12	6	16	-30	80	25	22110.0608	22110.0708
6	M10	25	18	34,0	6	8	12	6	16	-30	80	25	22110.0610	22110.0710
	M10 x 1	25	18	34,0	6	8	12	6	16	-30	80	25	22110.0612	22110.0712
	M12	28	20	40,5	7	10	14	10	23	-30	80	40	22110.0614	22110.0714
	M12 x 1,5	28	20	40,5	7	10	14	10	23	-30	80	40	22110.0616	22110.0716
7	M12	28	20	40,5	7	10	14	10	23	-30	80	41	22110.0618	22110.0718
	M12 x 1,5	28	20	40,5	7	10	14	10	23	-30	80	41	22110.0620	22110.0720
8	M16	33	23	47,5	10	12	17	11	35	-30	80	66	22110.0622	22110.0722
	M16 x 1,5	33	23	47,5	10	12	17	11	35	-30	80	67	22110.0624	22110.0724
10	M16	33	23	47,5	10	12	17	11	35	-30	80	68	22110.0626	22110.0726
	M16 x 1,5	33	23	47,5	10	12	17	11	35	-30	80	69	22110.0628	22110.0728

[1] statistical average value →

Dimensions							WS	Spring load[1]					Art. No.	
d_1 h9	d_2	d_3	d_4	l_1	l_2 min.	l_3		F_1 ~	F_2 ~	min.	max.		steel	stainless steel
[mm]							[mm]	[N]		[°C]		[g]		
with locking – picture 2														
4	**M 8**	21	15	27,5	5	6	10	4	12	-30	80	13	22110.0630	22110.0730
	M 8 x 1	21	15	27,5	5	6	10	4	12	-30	80	13	22110.0632	22110.0732
5	**M10**	25	18	34,0	6	8	12	6	16	-30	80	23	22110.0634	22110.0734
	M10 x 1	25	18	34,0	6	8	12	6	16	-30	80	23	22110.0636	22110.0736
6	**M10**	25	18	34,0	6	8	12	6	16	-30	80	24	22110.0638	22110.0738
	M10 x 1	25	18	34,0	6	8	12	6	16	-30	80	25	22110.0640	22110.0740
	M12	28	20	40,5	7	10	14	10	23	-30	80	38	22110.0642	22110.0742
	M12 x 1,5	28	20	40,5	7	10	14	10	23	-30	80	39	22110.0644	22110.0744
7	**M12**	28	20	40,5	7	10	14	10	23	-30	80	39	22110.0646	22110.0746
	M12 x 1,5	28	20	40,5	7	10	14	10	23	-30	80	39	22110.0648	22110.0748
8	**M16**	33	23	47,5	10	12	17	11	35	-30	80	64	22110.0650	22110.0750
	M16 x 1,5	33	23	47,5	10	12	17	11	35	-30	80	65	22110.0652	22110.0752
10	**M16**	33	23	47,5	10	12	17	11	35	-30	80	66	22110.0654	22110.0754
	M16 x 1,5	33	23	47,5	10	12	17	11	35	-30	80	67	22110.0656	22110.0756

[1] statistical average value

APPLICATION EXAMPLE

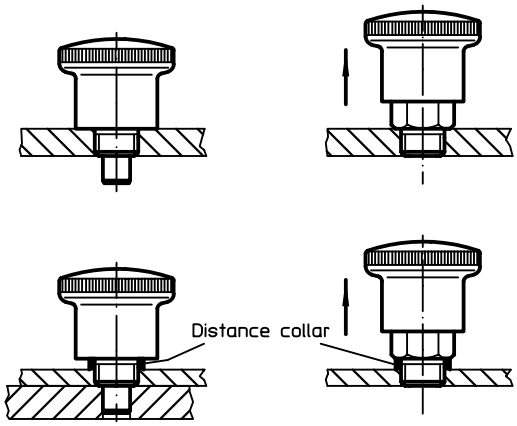

Index Plungers Mini Indexes • stainless steel

EH 22110.

PRODUCT DESCRIPTION

Particularly suitable for screwing into thin walled pieces.
Performance in the smallest space requirements.

Material

Body
- Stainless steel 1.4305

Locking pin
- Stainless steel 1.4305

Knob
- Stainless steel 1.4308

Assembly

Screw in the mini index. By lifting the knob, the hexagon will be released for assembly.

The screw length can be adapted by distance collars for index plungers (EH 22120.).

Operation

When using the self-locking type the knob is pulled-out, turned 30° and secured by a notched catch.

MORE INFORMATION

Notes

Knob not removable.

Further products

Distance Collars, for index plungers . . → p. 122

DRAWING

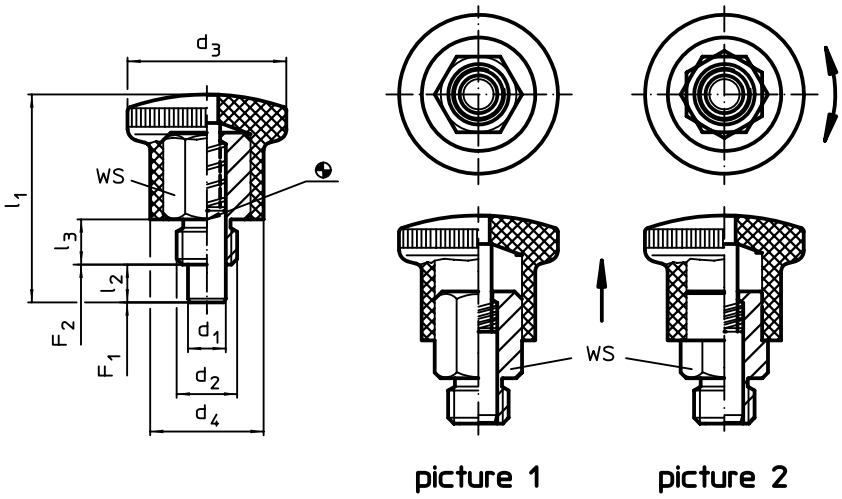

ORDER INFORMATION

Dimensions							WS	Spring load[1]				Art. No.
d_1 h9	d_2	d_3	d_4	l_1	l_2 min.	l_3		F_1 ~	F_2 ~	max.		
[mm]							[mm]	[N]		[°C]	[g]	
without locking – picture 1												
4	M 8	21	15	27,5	5	6	10	4	12	250	28	22110.1102
	M 8 x 1	21	15	27,5	5	6	10	4	12	250	28	22110.1104
5	M10	25	18	34,0	6	8	12	6	16	250	49	22110.1106
	M10 x 1	25	18	34,0	6	8	12	6	16	250	50	22110.1108
6	M10	25	18	34,0	6	8	12	6	16	250	50	22110.1110
	M10 x 1	25	18	34,0	6	8	12	6	16	250	50	22110.1112
	M12	28	20	40,5	7	10	14	10	23	250	74	22110.1114
	M12 x 1,5	28	20	40,5	7	10	14	10	23	250	75	22110.1116
7	M12	28	20	40,5	7	10	14	10	23	250	75	22110.1118
	M12 x 1,5	28	20	40,5	7	10	14	10	23	250	75	22110.1120
8	M16	33	23	47,5	10	12	17	11	34	250	110	22110.1122
	M16 x 1,5	33	23	47,5	10	12	17	11	35	250	113	22110.1124
10	M16	33	23	47,5	10	12	17	11	35	250	113	22110.1126
	M16 x 1,5	33	23	47,5	10	12	17	11	35	250	113	22110.1128

[1] statistical average value

→

2

Dimensions							WS	Spring load[1]				Art. No.
d_1 h9	d_2	d_3	d_4	l_1	l_2 min.	l_3		F_1 ~	F_2 ~	max.		
[mm]							[mm]	[N]		[°C]	[g]	
with locking – picture 2												
4	**M 8**	21	15	27,5	5	6	10	4	12	250	27	**22110.1130**
	M 8 x 1	21	15	27,5	5	6	10	4	12	250	28	**22110.1132**
5	**M10**	25	18	34,0	6	8	12	6	16	250	48	**22110.1134**
	M10 x 1	25	18	34,0	6	8	12	6	16	250	49	**22110.1136**
6	**M10**	25	18	34,0	6	8	12	6	16	250	49	**22110.1138**
	M10 x 1	25	18	34,0	6	8	12	6	16	250	49	**22110.1140**
	M12	28	20	40,5	7	10	14	10	23	250	72	**22110.1142**
	M12 x 1,5	28	20	40,5	7	10	14	10	23	250	73	**22110.1144**
7	**M12**	28	20	40,5	7	10	14	10	23	250	73	**22110.1146**
	M12 x 1,5	28	20	40,5	7	10	14	10	23	250	74	**22110.1148**
8	**M16**	33	23	47,5	10	12	17	11	35	250	110	**22110.1150**
	M16 x 1,5	33	23	47,5	10	12	17	11	35	250	110	**22110.1152**
10	**M16**	33	23	47,5	10	12	17	11	35	250	112	**22110.1154**
	M16 x 1,5	33	23	47,5	10	12	17	11	35	250	114	**22110.1156**

[1] statistical average value

APPLICATION EXAMPLE

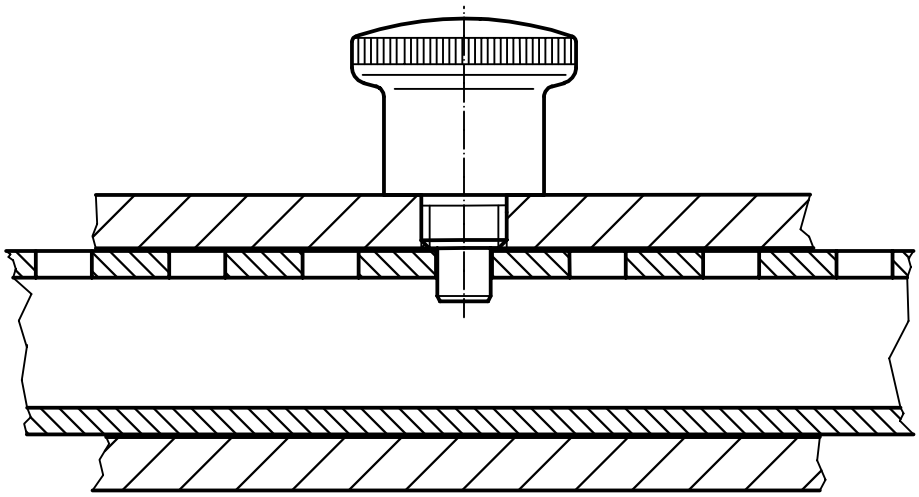

Index Plungers Compact • with hexagon collar

EH 22110.

PRODUCT DESCRIPTION

Index plungers are used for indexing bores.
Types with / without lock have the same building height.
Due to a thread recess the index plungers can be completely screwed in.

Material

Body
- Steel, blackened
- Stainless steel 1.4305

Locking pin
- Steel, hardened
- Stainless steel 1.4305, nickel-plated

Knob
- Thermoplastic PA 6, black, dull

Assembly

The screw length can be adapted by distance collars for index plungers (EH 22120.).

MORE INFORMATION

Notes

Knob not removable.
Lock nuts have to be purchased separately.

Further products

Mounting Blocks, for index bolts and index plungers, die-cast. . . . . → p. 109
Locating Bushings, for index bolts and index plungers . . . . . → p. 111
Distance Collars, for index plungers . . → p. 122

DRAWING

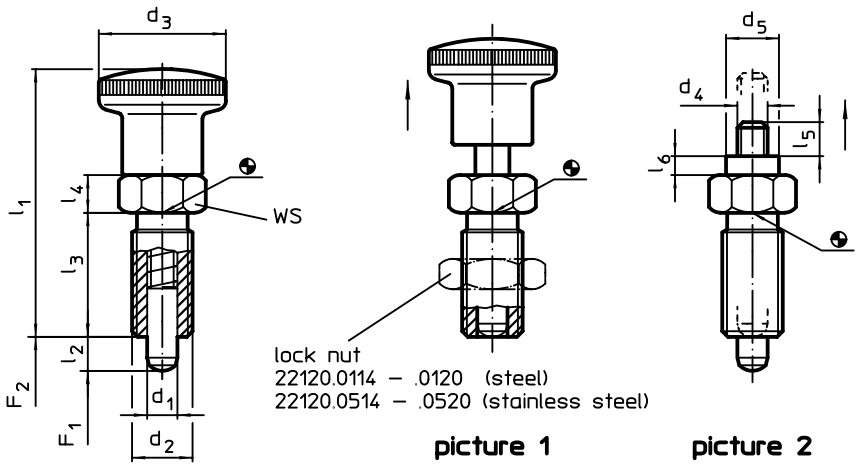

ORDER INFORMATION

Dimensions											WS	Spring load[1]					Art. No.	
d_1 -0,02 -0,04	l_2 min.	d_2	d_3	d_4	d_5	l_1	l_3	l_4	l_5	l_6		F_1 ~	F_2 ~	min.	max.		steel	stainless steel
[mm]											[mm]	[N]		[°C]		[g]		
with knob – picture 1																		
4	**4**	M 8 x 1	16	–	–	35,0	16	5	–	–	10	4,5	12,0	-30	80	10	22110.0103	22110.0203
	6	M 8 x 1	16	–	–	35,0	16	5	–	–	10	4,0	12,5	-30	80	10	22110.0104	22110.0204
5	**5**	M10 x 1	19	–	–	40,0	18	6	–	–	12	5,0	15,0	-30	80	18	22110.0106	22110.0206
	8	M10 x 1	19	–	–	40,0	18	6	–	–	12	5,0	18,0	-30	80	18	22110.0107	22110.0207
6	**6**	M12 x 1,5	23	–	–	48,0	22	6	–	–	14	6,5	19,0	-30	80	29	22110.0109	22110.0209
	9	M12 x 1,5	23	–	–	48,0	22	6	–	–	14	6,0	25,0	-30	80	29	22110.0110	22110.0210
8	**8**	M16 x 1,5	28	–	–	58,0	26	8	–	–	17	8,5	26,0	-30	80	62	22110.0112	22110.0212
	12	M16 x 1,5	28	–	–	58,0	26	8	–	–	17	8,5	28,0	-30	80	62	22110.0113	22110.0213
10	**12**	M16 x 1,5	28	–	–	58,0	26	8	–	–	17	9,5	38,0	-30	80	63	22110.0115	22110.0215
12	**15**	M20 x 1,5	33	–	–	67,0	33	10	–	–	22	11,5	40,0	-30	80	128	22110.0116	22110.0216
16	**20**	M24 x 2	33	–	–	78,5	38	12	–	–	27	13,0	54,0	-30	80	204	22110.0117	22110.0217

[1] statistical average value →

2

Dimensions											WS	Spring load[1]					Art. No.	
d_1 -0,02 -0,04	l_2 min.	d_2	d_3	d_4	d_5	l_1	l_3	l_4	l_5	l_6		F_1 ~	F_2 ~	min.	max.		steel	stainless steel
[mm]											[mm]	[N]		[°C]		[g]		
without knob – picture 2																		
4	**4**	M 8 x 1	–	M3	7	–	16	5	4,5	2,5	10	4,5	12,0	–	250	9	22110.0143	22110.0243
	6	M 8 x 1	–	M3	7	–	16	5	4,5	2,5	10	4,0	12,5	–	250	9	22110.0144	22110.0244
5	**5**	M10 x 1	–	M4	8	–	18	6	5,5	3,0	12	5,0	15,0	–	250	16	22110.0146	22110.0246
	8	M10 x 1	–	M4	8	–	18	6	5,5	3,0	12	5,0	18,0	–	250	16	22110.0147	22110.0247
6	**6**	M12 x 1,5	–	M5	9	–	22	6	7,0	3,5	14	6,5	19,0	–	250	25	22110.0149	22110.0249
	9	M12 x 1,5	–	M5	9	–	22	6	7,0	3,5	14	6,0	25,0	–	250	25	22110.0150	22110.0250
8	**8**	M16 x 1,5	–	M6	10	–	26	8	8,5	4,0	17	8,5	26,0	–	250	55	22110.0152	22110.0252
	12	M16 x 1,5	–	M6	10	–	26	8	8,5	4,0	17	8,5	28,0	–	250	55	22110.0153	22110.0253
10	**12**	M16 x 1,5	–	M6	10	–	26	8	8,5	4,0	17	9,5	38,0	–	250	56	22110.0155	22110.0255
12	**15**	M20 x 1,5	–	M6	12	–	33	10	8,5	4,0	22	11,5	40,0	–	250	111	22110.0156	22110.0256
16	**20**	M24 x 2	–	M8	15	–	38	12	11,5	5,0	27	13,0	54,0	–	250	194	22110.0157	22110.0257

[1] statistical average value

ACCESSORIES

	Dimensions d_2 [mm]	Wrench size [mm]	[g]	Art. No. steel	Art. No. stainless steel
lock nuts ISO 8675 (DIN 439) for the following sizes					
	M 8 x 1	13	2,7	22120.0114	22120.0514
	M10 x 1	16	5,2	22120.0115	22120.0515
	M12 x 1,5	18	7,4	22120.0116	22120.0516
	M16 x 1,5	24	18,0	22120.0118	22120.0518
	M20 x 1,5	30	32,0	22120.0120	22120.0520
	M24 x 2	36	58,0	22120.0122	22120.0522

APPLICATION EXAMPLE

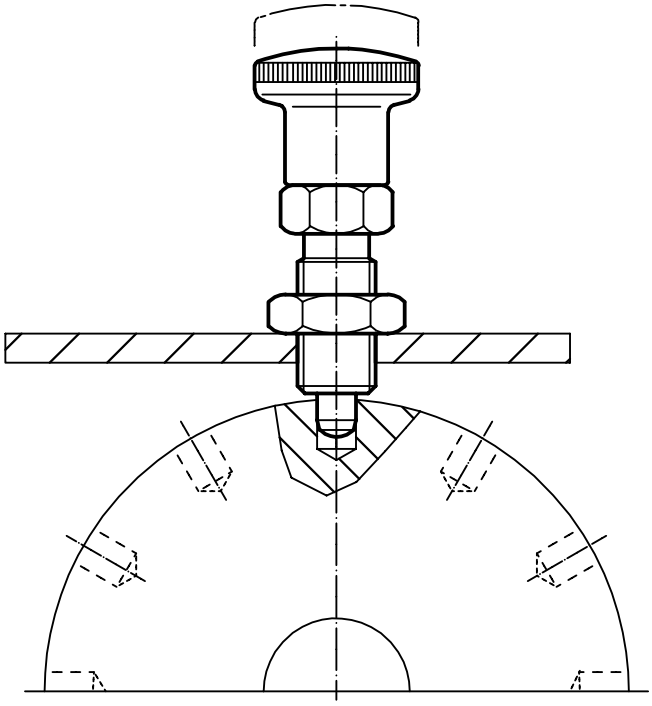

Index Plungers Compact • with hexagon collar and locking

EH 22110.

PRODUCT DESCRIPTION

Index plungers are used for indexing bores.
Types with / without lock have the same building height.
Due to a thread recess the index plungers can be completely screwed in.

Material

Body
- Steel, blackened
- Stainless steel 1.4305

Locking pin
- Steel, hardened
- Stainless steel 1.4305, nickel-plated

Knob
- Thermoplastic PA 6, black, dull

Assembly

The screw length can be adapted by distance collars for index plungers (EH 22120.).

Operation

The knob is pulled-out, turned 90° and secured by a notched catch (when locking pin should not overhang).

MORE INFORMATION

Notes

Knob not removable.
Lock nuts have to be purchased separately.

Further products

Mounting Blocks, for index bolts and index plungers, die-cast. . . . . → p. 109
Locating Bushings, for index bolts and index plungers . . . . . → p. 111
Distance Collars, for index plungers . . → p. 122

DRAWING

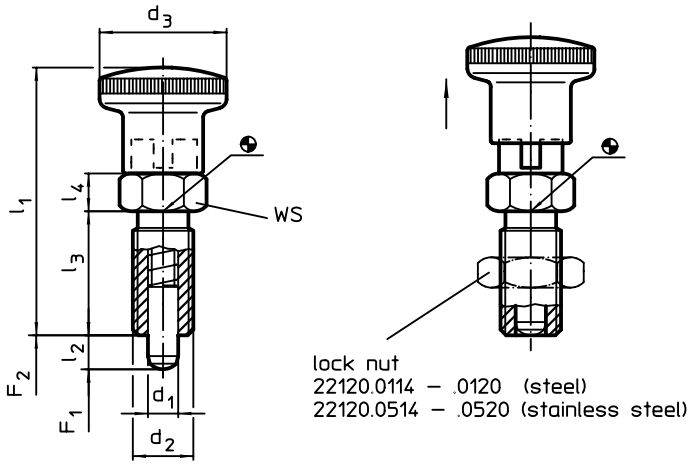

ORDER INFORMATION

Dimensions							WS	Spring load[1]					Art. No.	
d_1 -0,02 -0,04	l_2 min.	d_2	d_3	l_1	l_3	l_4		F_1 ~	F_2 ~	min.	max.		steel	stainless steel
[mm]							[mm]	[N]		[°C]		[g]		
4	4	M 8 x 1	16	35,0	16	5	10	4,5	12,0	-30	80	12	22110.0123	22110.0223
	6	M 8 x 1	16	35,0	16	5	10	4,0	12,5	-30	80	12	22110.0124	22110.0224
5	5	M10 x 1	19	40,0	18	6	12	5,0	15,0	-30	80	20	22110.0126	22110.0226
	8	M10 x 1	19	40,0	18	6	12	5,0	18,0	-30	80	20	22110.0127	22110.0227
6	6	M12 x 1,5	23	48,0	22	6	14	6,5	19,0	-30	80	31	22110.0129	22110.0229
	9	M12 x 1,5	23	48,0	22	6	14	6,0	25,0	-30	80	33	22110.0130	22110.0230
8	8	M16 x 1,5	28	58,0	26	8	17	8,5	26,0	-30	80	65	22110.0132	22110.0232
	12	M16 x 1,5	28	58,0	26	8	17	8,5	28,0	-30	80	68	22110.0133	22110.0233
10	12	M16 x 1,5	28	58,0	26	8	17	9,5	38,0	-30	80	69	22110.0135	22110.0235
12	15	M20 x 1,5	33	67,0	33	10	22	11,5	40,0	-30	80	125	22110.0136	22110.0236
16	20	M24 x 2	33	78,5	38	12	27	13,0	54,0	-30	80	220	22110.0137	22110.0237

[1] statistical average value

2

ACCESSORIES

	Dimensions d_2 [mm]	Wrench size [mm]	[g]	Art. No. steel	Art. No. stainless steel
lock nuts ISO 8675 (DIN 439) for the following sizes					
	M 8 x 1	13	2,7	22120.0114	22120.0514
	M10 x 1	16	5,2	22120.0115	22120.0515
	M12 x 1,5	18	7,4	22120.0116	22120.0516
	M16 x 1,5	24	18,0	22120.0118	22120.0518
	M20 x 1,5	30	32,0	22120.0120	22120.0520
	M24 x 2	36	58,0	22120.0122	22120.0522

APPLICATION EXAMPLE

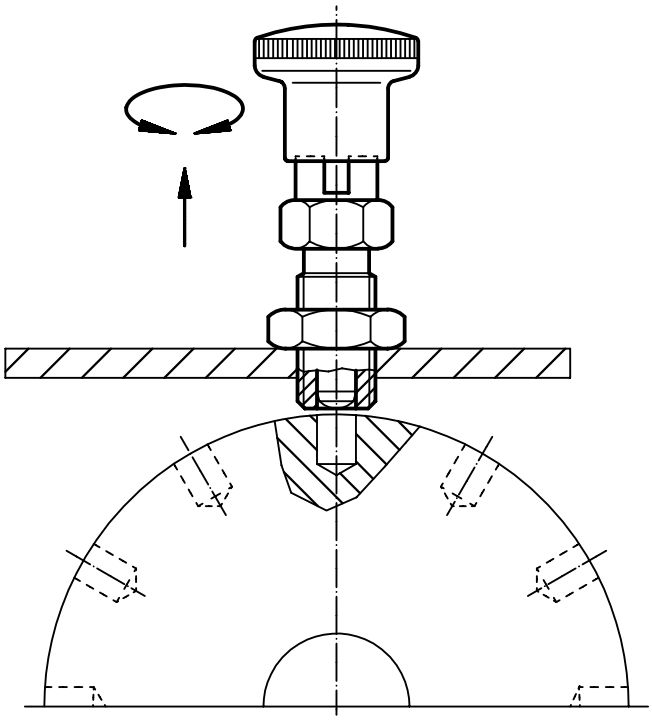

Index Plungers Compact • with hexagon collar, with T-handle

EH 22110.

PRODUCT DESCRIPTION

Index plungers are used for indexing bores.
Simple handling, e.g. when using safety gloves, with higher pull release.
Types with / without lock have the same building height.
Due to a thread recess the index plungers can be completely screwed in.

Material

Body
- Steel, blackened
- Stainless steel 1.4305

Locking pin
- Steel, hardened
- Stainless steel 1.4305, nickel-plated

Knob
- Thermoplastic PA 6, black, dull

Assembly

The screw length can be adapted by distance collars for index plungers (EH 22120.).

MORE INFORMATION

Notes

Knob not removable.
Lock nuts have to be purchased separately.

Further products

Mounting Blocks, for index bolts and index plungers, die-cast. . . . . → p. 109
Locating Bushings, for index bolts and index plungers . . . . . → p. 111
Distance Collars, for index plungers . . → p. 122

DRAWING

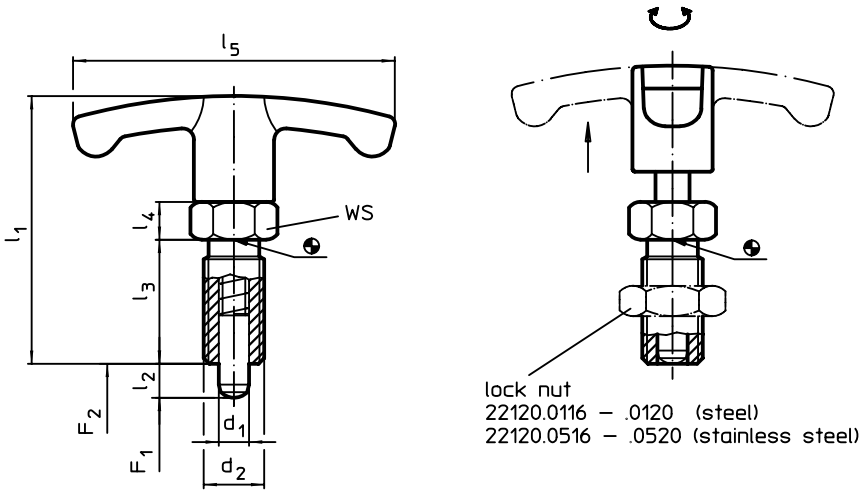

ORDER INFORMATION

Dimensions							WS	Spring load[1]					Art. No.	
d_1 -0,02 -0,04	l_2	d_2	l_1	l_3	l_4	l_5		F_1 ~	F_2 ~	min.	max.		steel	stainless steel
[mm]							[mm]	[N]		[°C]		[g]		
6	6	M12 x 1,5	48	22	6	54	14	6,5	19	-30	80	31	22110.0820	22110.0920
	9	M12 x 1,5	48	22	6	54	14	6,0	25	-30	80	32	22110.0822	22110.0922
8	8	M16 x 1,5	59	26	8	59	17	8,5	26	-30	80	64	22110.0824	22110.0924
	12	M16 x 1,5	59	26	8	59	17	8,5	28	-30	80	65	22110.0826	22110.0926
10	12	M16 x 1,5	59	26	8	59	17	9,5	38	-30	80	66	22110.0828	22110.0928
12	15	M20 x 1,5	68	33	10	59	22	11,5	40	-30	80	121	22110.0830	22110.0930

[1] statistical average value

ACCESSORIES

	Dimensions d_2 [mm]	Wrench size [mm]	[g]	Art. No. steel	Art. No. stainless steel
lock nuts ISO 8675 (DIN 439) for the following sizes					
	M12 x 1,5	18	7,4	22120.0116	22120.0516
	M16 x 1,5	24	18,0	22120.0118	22120.0518
	M20 x 1,5	30	32,0	22120.0120	22120.0520

2

Index Plungers Compact • with hexagon collar and locking, with T-handle

EH 22110.

PRODUCT DESCRIPTION

Index plungers are used for indexing bores.
Simple handling, e.g. when using safety gloves, with higher pull release.
Types with / without lock have the same building height.
Due to a thread recess the index plungers can be completely screwed in.

Material

Body
- Steel, blackened
- Stainless steel 1.4305

Locking pin
- Steel, hardened
- Stainless steel 1.4305, nickel-plated

Knob
- Thermoplastic PA 6, black, dull

Assembly

The screw length can be adapted by distance collars for index plungers (EH 22120.).

Operation

The T-handle is pulled out, turned 90° and secured by an internal notched catch (when locking pin should not overhang). The positions are defined distinctively by the T-handle.

MORE INFORMATION

Notes

Knob not removable.
Lock nuts have to be purchased separately.

Further products

Mounting Blocks, for index bolts and index plungers, die-cast. . . . . → p. 109
Locating Bushings, for index bolts and index plungers . . . . . → p. 111
Distance Collars, for index plungers . . → p. 122

DRAWING

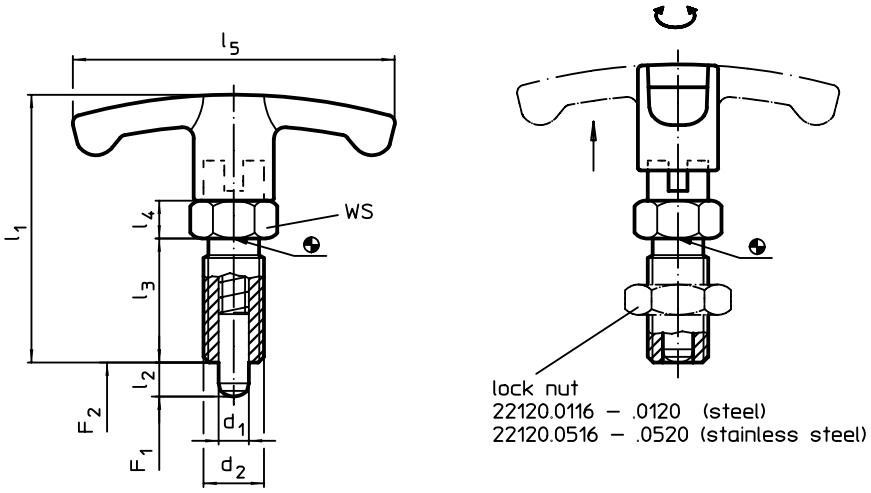

ORDER INFORMATION

Dimensions							WS	Spring load[1]					Art. No.	
d_1	l_2	d_2	l_1	l_3	l_4	l_5		F_1 ~	F_2 ~	min.	max.		steel	stainless steel
[mm]							[mm]	[N]		[°C]		[g]		
6	6	M12 x 1,5	48	22	6	54	14	6,5	19	-30	80	33	22110.0832	22110.0932
	9	M12 x 1,5	48	22	6	54	14	6,0	25	-30	80	34	22110.0834	22110.0934
8	8	M16 x 1,5	59	26	8	59	17	8,5	26	-30	80	68	22110.0836	22110.0936
	12	M16 x 1,5	59	26	8	59	17	8,5	28	-30	80	71	22110.0838	22110.0938
10	12	M16 x 1,5	59	26	8	59	17	9,5	38	-30	80	72	22110.0840	22110.0940
12	15	M20 x 1,5	68	33	10	59	22	11,5	40	-30	80	127	22110.0842	22110.0942

[1] statistical average value

ACCESSORIES

	Dimensions d_2 [mm]	Wrench size [mm]	[g]	Art. No. steel	Art. No. stainless steel
lock nuts ISO 8675 (DIN 439) for the following sizes					
	M12 x 1,5	18	7,4	22120.0116	22120.0516
	M16 x 1,5	24	18,0	22120.0118	22120.0518
	M20 x 1,5	30	32,0	22120.0120	22120.0520

APPLICATION EXAMPLE

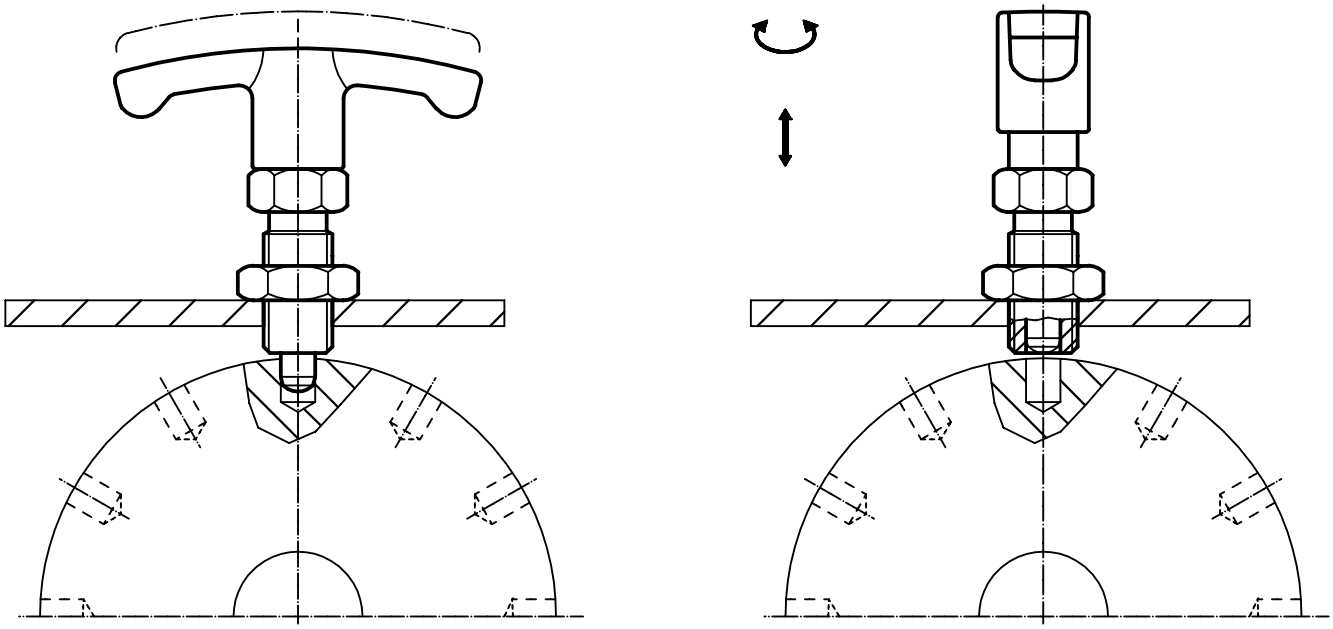

2

Index Plungers • with mounting flange, horizontal

EH 22110.

PRODUCT DESCRIPTION

Index plungers are used for indexing bores.

Material

Housing
- Zinc die-cast, plastic coated, black

Locking pin
- Stainless steel 1.4305

Knob
- Thermoplastic PA 6, black, dull

Pull-ring
- Stainless steel 1.4310

Assembly

Assembly by means of washers ISO 7092.

Operation

When using locking index plungers, the knob is pulled-out, turned 90° and secured by a notched catch (when locking pin should not overhang).

MORE INFORMATION

Notes

Knob not removable.

DRAWING

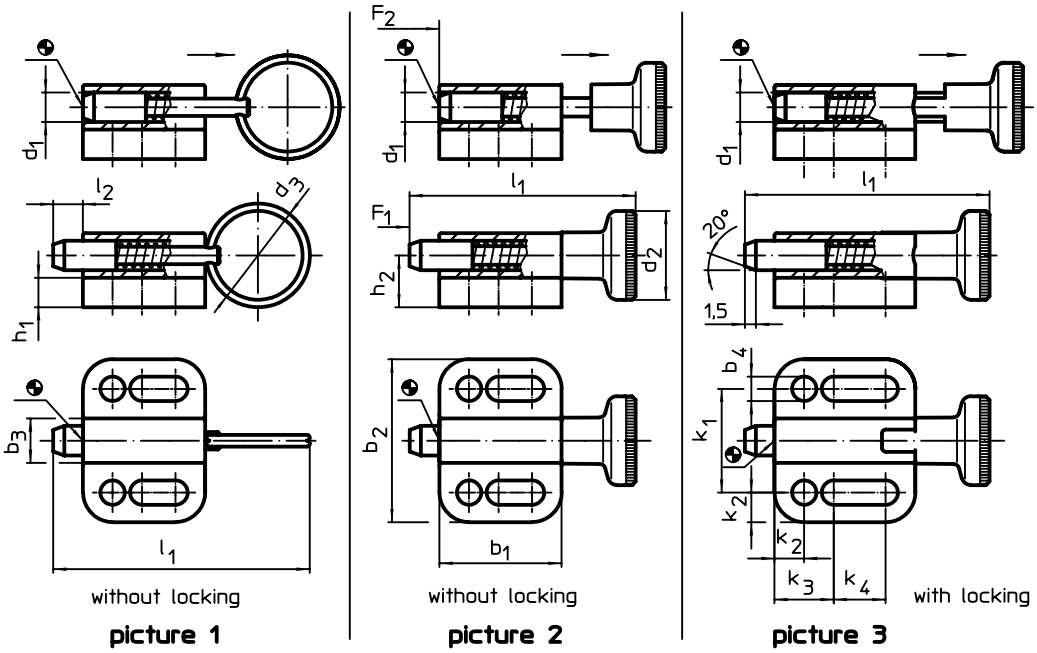

ORDER INFORMATION

Dimensions															Spring load[1]					Art. No.
d_1 h9	d_2	d_3	b_1	b_2	b_3	b_4 -0,2	h_1	h_2	k_1 ±0,05	k_2	k_3	k_4	l_1	l_2 min.	F_1 ~	F_2 ~	min.	max.		
[mm]															[N]		[°C]		[g]	
with pull-ring, without locking – picture 1																				
4	–	14	16,5	22	6,0	3,3	4,0	7,0	14	4,0	8	4,5	34,5	4	3	12	–	100	10	22110.0304
5	–	18	22,0	28	8,0	4,3	4,5	9,5	18	5,0	10	7,0	45,0	5	5	24	–	100	20	22110.0305
6	–	24	27,5	32	10,0	5,4	5,0	10,5	21	5,5	12	10,0	57,5	6	5	21	–	100	40	22110.0306
8	–	30	33,0	34	12,0	5,4	6,0	12,5	23	5,5	12	15,5	71,0	8	6	22	–	100	58	22110.0308
10	–	30	35,0	39	14,5	6,5	6,0	14,5	27	6,0	15	13,5	75,0	10	4	25	–	100	83	22110.0310
with knob, without locking – picture 2																				
4	12	–	16,5	22	6,0	3,3	4,0	7,0	14	4,0	8	4,5	30,5	4	3	12	-30	80	11	22110.0324
5	16	–	22,0	28	8,0	4,3	4,5	9,5	18	5,0	10	7,0	40,0	5	5	24	-30	80	20	22110.0325
6	18	–	27,5	32	10,0	5,4	5,0	10,5	21	5,5	12	10,0	49,0	6	5	21	-30	80	37	22110.0326
8	21	–	33,0	34	12,0	5,4	6,0	12,5	23	5,5	12	15,5	59,0	8	6	22	-30	80	59	22110.0328
10	25	–	35,0	39	14,5	6,5	6,0	14,5	27	6,0	15	13,5	67,5	10	4	25	-30	80	90	22110.0330
with knob and locking – picture 3																				
4	12	–	19,0	22	6,0	3,3	4,0	7,0	14	4,0	8	7,0	33,0	4	3	12	-30	80	10	22110.0344
5	16	–	25,5	28	8,0	4,3	4,5	9,5	18	5,0	10	10,5	43,5	5	5	24	-30	80	26	22110.0345
6	18	–	30,5	32	10,0	5,4	5,0	10,5	21	5,5	12	13,0	52,0	6	5	21	-30	80	40	22110.0346
8	21	–	37,5	34	12,0	5,4	6,0	12,5	23	5,5	12	20,0	63,5	8	6	22	-30	80	67	22110.0348
10	25	–	40,0	39	14,5	6,5	6,0	14,5	27	6,0	15	18,5	72,5	10	4	25	-30	80	98	22110.0350

[1] statistical average value

Mounting Blocks • for index bolts and index plungers, die-cast

EH 22110.

PRODUCT DESCRIPTION

Assembly support and extended applications for index bolts and index plungers. Also to be used as a seat for locating bushings EH 22110.

Material

Threaded pin
- Steel, blackened, with brass pad

Body
- Zinc die-cast, plastic coated, black

Assembly

Index plunger must be assembled in hole d_1 on countersink side.

MORE INFORMATION

Further products

Positioning Bushings, for index bolts and index plungers . . . . . → p. 112

DRAWING

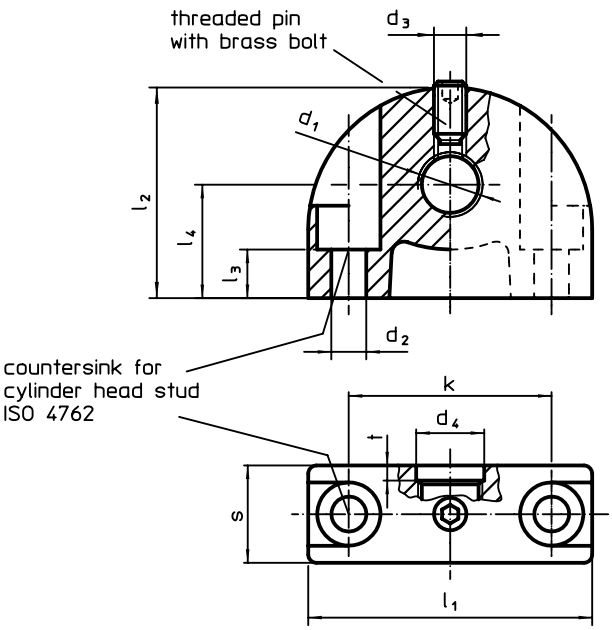

ORDER INFORMATION

Dimensions													Art. No.
d_1	d_2	d_3	d_4	k	l_1	l_2	l_3	l_4	s	t	max. [°C]	[g]	
[mm]													
mounting hole vertical to index bolt and index plunger													
M 8 x 1	4,3	M4	8,2	25	35	26	11,5	14	12	2	100	39	22110.0408
M 8	4,3	M4	8,2	25	35	26	6,0	14	12	2	100	40	22110.0508
M10 x 1	4,3	M4	10,2	25	35	26	11,5	14	12	2	100	36	22110.0410
M10	4,3	M4	10,2	25	35	26	6,0	14	12	2	100	38	22110.0510
M12 x 1,5	4,3	M4	12,2	25	35	26	11,5	14	12	3	100	41	22110.0412
M12	4,3	M4	12,2	25	35	26	6,0	14	12	3	100	35	22110.0512
M16 x 1,5	5,3	M5	16,2	35	47	34	15,5	18	14	3	100	77	22110.0416
M16	5,3	M5	16,2	35	47	34	10,0	18	14	3	100	76	22110.0516
M20 x 1,5	5,3	M5	20,2	35	47	34	15,5	18	14	3	100	68	22110.0420

2

APPLICATION EXAMPLE

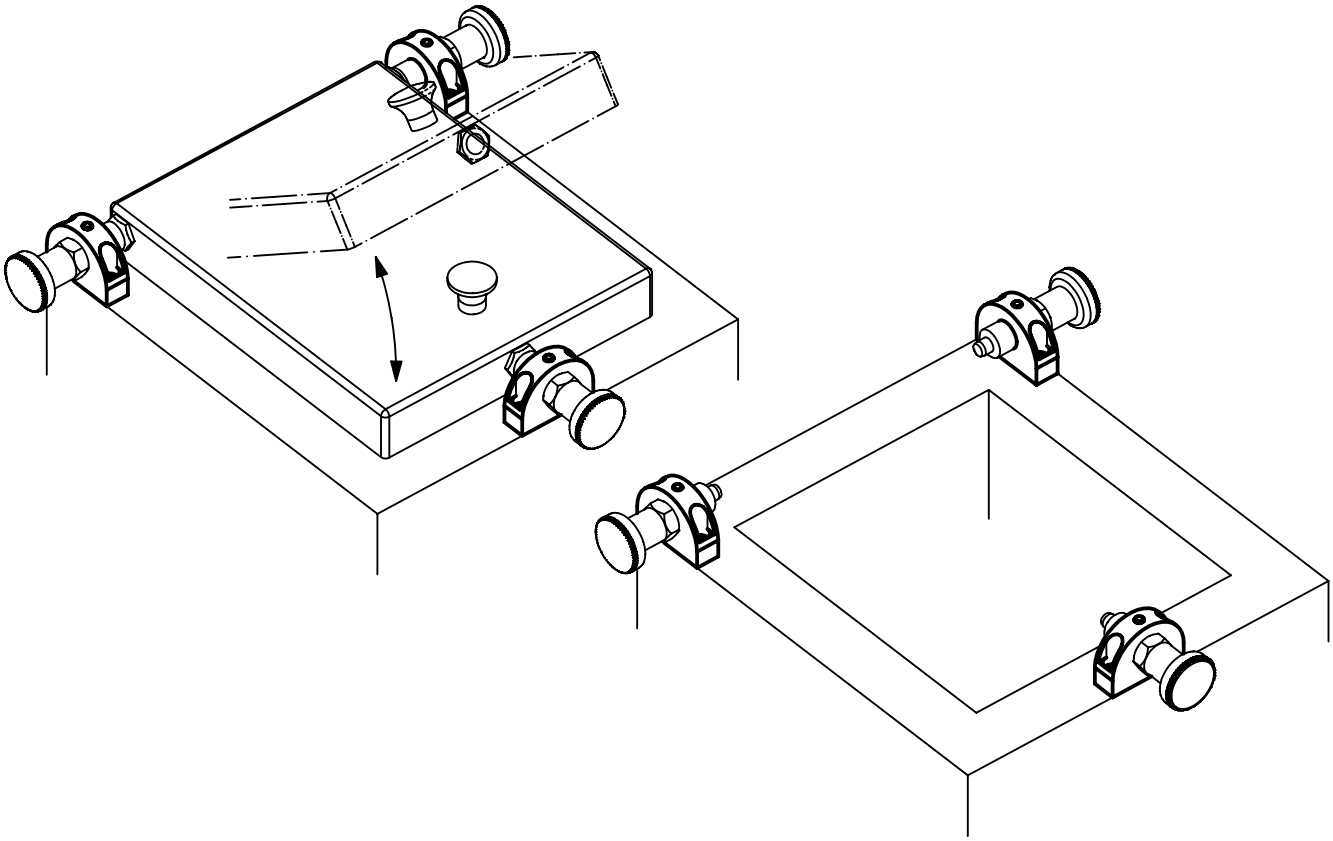

Locating Bushings • for index bolts and index plungers

EH 22110.

PRODUCT DESCRIPTION

Used for locating the locking pin of index bolts and index plungers. Suitable for mounting blocks 22110.0412 and 22110.0416.

Material

- Steel, nitrided

MORE INFORMATION

Further products

Mounting Blocks, for index bolts and index plungers, die-cast. . . . . → p. 109

DRAWING

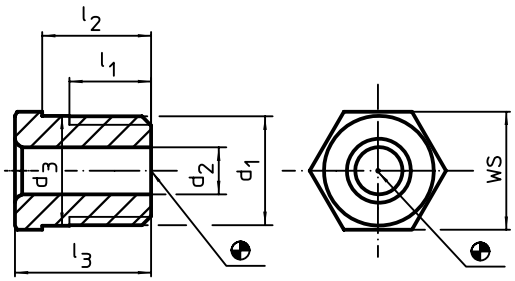

ORDER INFORMATION

Dimensions						For pin	WS	max.		Art. No.
d_1	d_2 +0,1	d_3 ±0,3	l_1 min.	l_2 -0,3	l_3					
[mm]						[mm]	[mm]	[°C]	[g]	
M12 x 1,5	4,2	12,1	9	10	13	**4**	13	250	10	22110.0454
	5,2	12,1	9	10	13	**5**	13	250	10	22110.0455
	6,2	12,1	9	10	13	**6**	13	250	9	22110.0456
M16 x 1,5	8,2	16,1	11	12	15	**8**	17	250	18	22110.0458
	10,2	16,1	11	12	15	**10**	17	250	14	22110.0460
	12,2	16,1	11	12	15	**12**	17	250	9	22110.0462

APPLICATION EXAMPLE

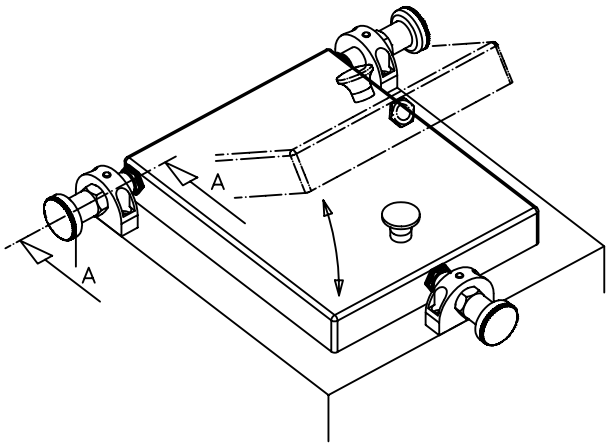

A–A

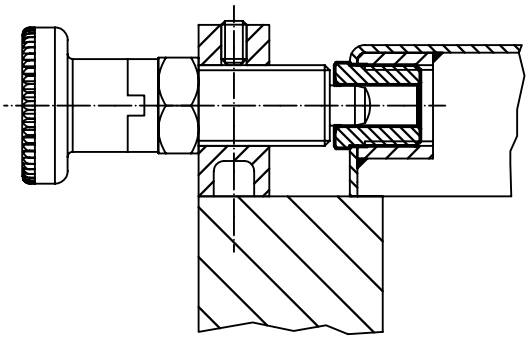

2

Positioning Bushings • for index bolts and index plungers

EH 22110.

PRODUCT DESCRIPTION

Positioning bushings are suitable for index plungers and index bolts.
Low wear thanks to hardened running ball.

Material
- Steel, hardened, blackened
- Stainless steel, hardened

DRAWING

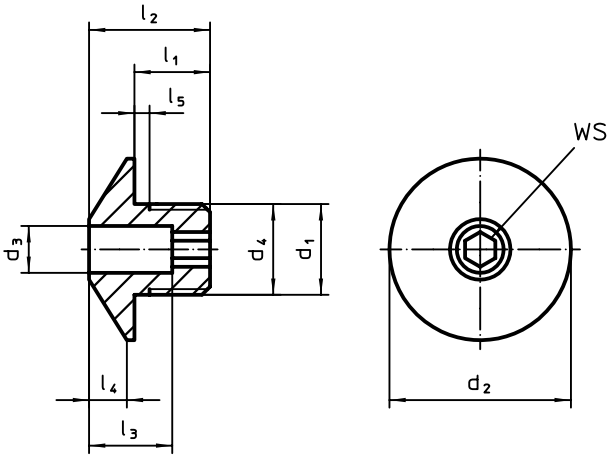

ORDER INFORMATION

	Dimensions								For pin	WS		Art. No.	
d_1	d_3 +0,1	d_2	d_4 -0,05	l_1	l_2	l_3	l_4	l_5 +0,5				steel	stainless steel
	[mm]								[mm]	[mm]	[g]		
M12 x 1,5	**4,2**	24	12	10	16	11	5	1,5	**4**	4	17	22110.0464	22110.0474
	5,2	24	12	10	16	11	5	1,5	**5**	4	16	22110.0465	22110.0475
	6,2	24	12	10	16	11	5	1,5	**6**	4	16	22110.0466	22110.0476
M16 x 1,5	**8,2**	32	16	12	20	13	7	1,5	**8**	6	36	22110.0468	22110.0478
	10,2	32	16	12	20	13	7	1,5	**10**	6	33	22110.0470	22110.0480
	12,2	32	16	12	20	13	7	1,5	**12**	6	33	22110.0472	22110.0482

APPLICATION EXAMPLE

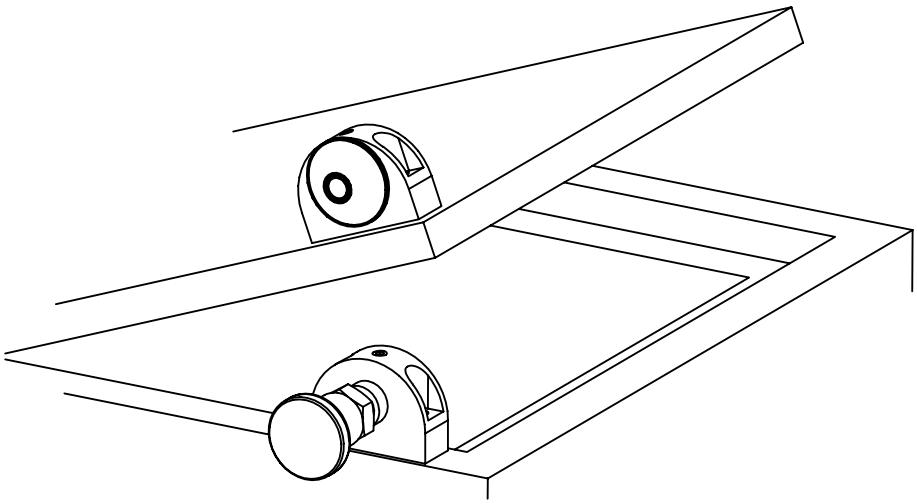

Index Plungers • with hexagon collar

EH 22120.

PRODUCT DESCRIPTION

Index plungers are used for indexing bores.

Material

Body
- Free cutting steel, blackened
- Stainless steel 1.4305

Locking pin
- Steel, hardened
- Stainless steel 1.4305, nickel-plated

Knob
- Thermoplastic PA 6, black, dull

Assembly

The screw length can be adapted by distance collars for index plungers (EH 22120.).

MORE INFORMATION

Notes

Knob not removable.
Lock nuts have to be purchased separately.

Further products

Mounting Blocks, for index bolts and index plungers, die-cast. . . . . → p. 109
Locating Bushings, for index bolts and index plungers . . . . . → p. 111
Distance Collars, for index plungers . . → p. 122

DRAWING

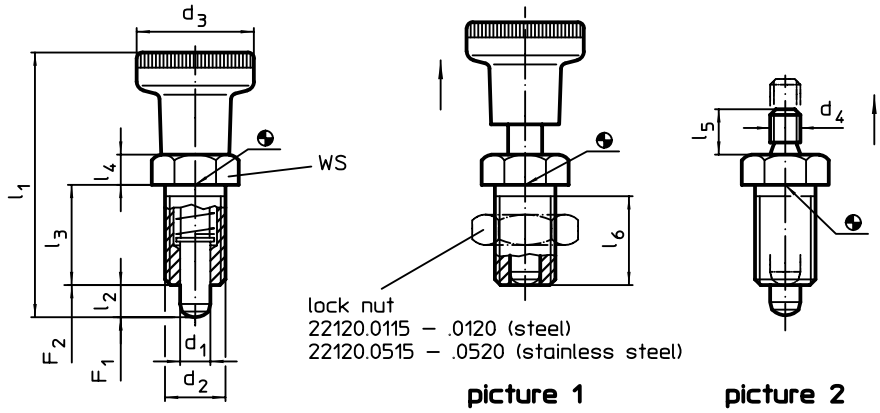

ORDER INFORMATION

Dimensions										WS	Spring load[1]					Art. No.	
d_1 -0,02 -0,04	d_2	d_3	d_4	l_1 ~	l_2 min.	l_3	l_4	l_5	l_6 min.		F_1 ~	F_2 ~	min.	max.		steel	stainless steel
[mm]										[mm]	[N]		[°C]		[g]		
with knob – picture 1																	
5	M10 x 1	21	–	45,0	5	17	5	–	15	12	6,0	14	-30	80	19	22120.0005	22120.0405
6	M12 x 1,5	25	–	54,5	6	20	6	–	17	14	5,5	13	-30	80	31	22120.0006	22120.0406
8	M16 x 1,5	31	–	69,0	8	26	8	–	23	19	11,5	28	-30	80	71	22120.0008	22120.0408
10	M20 x 1,5	31	–	80,0	10	33	10	–	30	22	23,0	54	-30	80	115	22120.0010	22120.0410
without knob – picture 2																	
5	M10 x 1	–	M5	–	5	17	5	6	15	12	6,0	14	–	250	14	22120.0025	22120.0425
6	M12 x 1,5	–	M6	–	6	20	6	10	17	14	5,5	13	–	250	23	22120.0026	22120.0426
8	M16 x 1,5	–	M8	–	8	26	8	12	23	19	11,5	28	–	250	54	22120.0028	22120.0428
10	M20 x 1,5	–	M8	–	10	33	10	12	30	22	23,0	54	–	250	79	22120.0030	22120.0430

[1] statistical average value

ACCESSORIES

	Dimensions d_2 [mm]	Wrench size [mm]	[g]	Art. No. steel	Art. No. stainless steel
lock nuts ISO 8675 (DIN 439) for the following sizes					
	M10 x 1	16	5,2	22120.0115	22120.0515
	M12 x 1,5	18	7,4	22120.0116	22120.0516
	M16 x 1,5	24	18,0	22120.0118	22120.0518
	M20 x 1,5	30	32,0	22120.0120	22120.0520

2

Index Plungers • with hexagon collar, stainless steel

EH 22120.

PRODUCT DESCRIPTION

Index plungers are used for indexing bores.

Material

Body
- Stainless steel 1.4305

Locking pin
- Stainless steel 1.4305, nickel-plated

Knob
- Stainless steel 1.4305

Assembly

The screw length can be adapted by distance collars for index plungers (EH 22120.).

MORE INFORMATION

Notes

Knob not removable.
Lock nuts have to be purchased separately.

Further products

Mounting Blocks, for index bolts and index plungers, die-cast. . . . . → p. 109
Distance Collars, for index plungers . . → p. 122

DRAWING

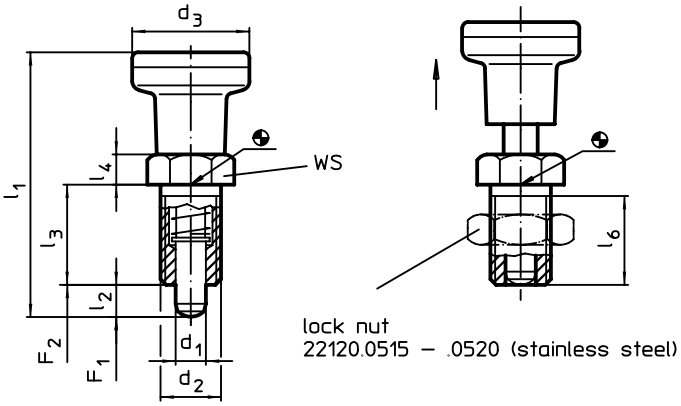

ORDER INFORMATION

Dimensions								WS	Spring load[1]				Art. No.
d_1 -0,02 -0,04	d_2	d_3	l_1 ~	l_2 min.	l_3	l_4	l_6 min.		F_1 ~	F_2 ~	max.		stainless steel
[mm]								[mm]	[N]		[°C]	[g]	
5	M10 x 1	21	45,0	5	17	5	15	12	6,0	14	250	39	22120.0485
6	M12 x 1,5	25	54,5	6	20	6	17	14	5,5	13	250	65	22120.0486
8	M16 x 1,5	31	69,0	8	26	8	23	19	11,5	28	250	132	22120.0488
10	M20 x 1,5	31	80,0	10	33	10	30	22	23,0	54	250	175	22120.0490

[1] statistical average value

ACCESSORIES

	Dimensions d_2 [mm]	Wrench size [mm]	[g]	Art. No. stainless steel
lock nuts ISO 8675 (DIN 439) for the following sizes				
	M10 x 1	16	5,2	22120.0515
	M12 x 1,5	18	7,4	22120.0516
	M16 x 1,5	24	18,0	22120.0518
	M20 x 1,5	30	32,0	22120.0520

Index Plungers • with hexagon collar and locking

EH 22120.

PRODUCT DESCRIPTION

Index plungers are used for indexing bores.

Material

Body
- Free cutting steel, blackened
- Stainless steel 1.4305

Locking pin
- Steel, hardened
- Stainless steel 1.4305, nickel-plated

Knob
- Thermoplastic PA 6, black, dull

Assembly

The screw length can be adapted by distance collars for index plungers (EH 22120.).

Operation

The knob is pulled-out, turned 90° and secured by a notched catch (when locking pin should not overhang).

MORE INFORMATION

Notes

Knob not removable.
Lock nuts have to be purchased separately.

Further products

Mounting Blocks, for index bolts and index plungers, die-cast. . . . . → p. 109
Locating Bushings, for index bolts and index plungers . . . . . → p. 111
Distance Collars, for index plungers . . → p. 122

DRAWING

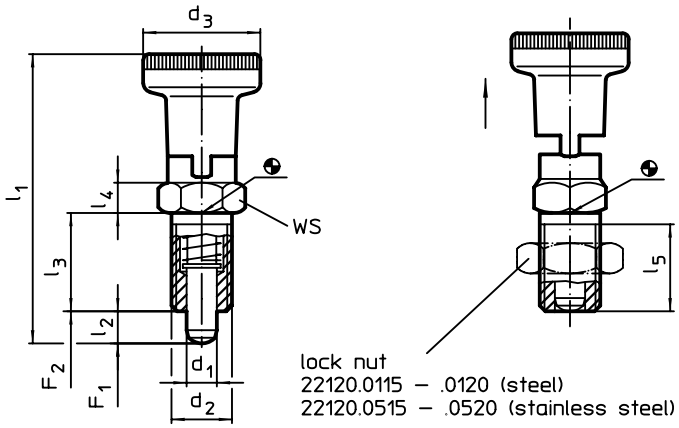

ORDER INFORMATION

Dimensions								WS	Spring load[1]					Art. No.	
d_1 -0,02 -0,04	d_2	d_3	l_1 ~	l_2 min.	l_3	l_4	l_5 min.		F_1 ~	F_2 ~	min.	max.		steel	stainless steel
[mm]								[mm]	[N]		[°C]		[g]		
5	M10 x 1	21	51,0	5	17	5	15	12	6,0	14	-30	80	22	22120.0205	22120.0605
6	M12 x 1,5	25	61,0	6	20	6	17	14	5,5	13	-30	80	36	22120.0206	22120.0606
8	M16 x 1,5	31	75,5	7	26	8	23	19	11,5	28	-30	80	79	22120.0208	22120.0608
10	M20 x 1,5	31	91,0	10	33	10	30	22	28,0	54	-30	80	134	22120.0210	22120.0610

[1] statistical average value

ACCESSORIES

	Dimensions d_2 [mm]	Wrench size [mm]	[g]	Art. No. steel	Art. No. stainless steel
lock nuts ISO 8675 (DIN 439) for the following sizes					
	M10 x 1	16	5,2	22120.0115	22120.0515
	M12 x 1,5	18	7,4	22120.0116	22120.0516
	M16 x 1,5	24	18,0	22120.0118	22120.0518
	M20 x 1,5	30	32,0	22120.0120	22120.0520

2

Index Plungers • with hexagon collar and locking, stainless steel

EH 22120.

PRODUCT DESCRIPTION

Index plungers are used for indexing bores.

Material

Body
- Stainless steel 1.4305

Locking pin
- Stainless steel 1.4305, nickel-plated

Knob
- Stainless steel 1.4305

Assembly

The screw length can be adapted by distance collars for index plungers (EH 22120.).

Operation

The knob is pulled-out, turned 90° and secured by a notched catch (when locking pin should not overhang).

MORE INFORMATION

Notes

Knob not removable.
Lock nuts have to be purchased separately.

Further products

Mounting Blocks, for index bolts and index plungers, die-cast. . . . . → p. 109
Distance Collars, for index plungers . . → p. 122

DRAWING

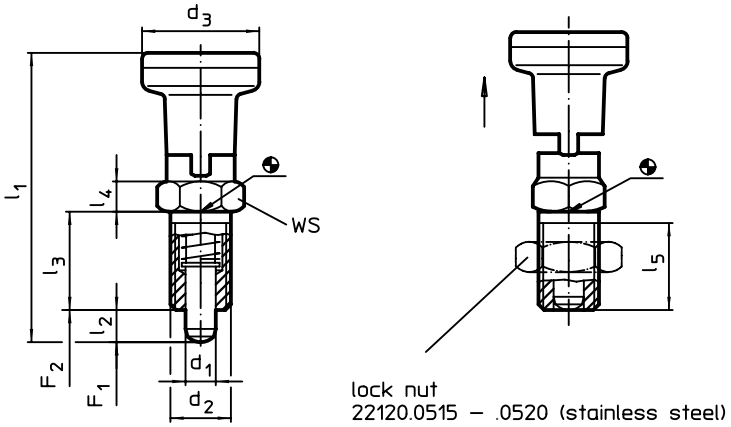

ORDER INFORMATION

Dimensions								WS	Spring load[1]				Art. No.
d_1 -0,02 -0,04	d_2	d_3	l_1 ~	l_2 min.	l_3	l_4	l_5 min.		F_1 ~	F_2 ~	max.		stainless steel
[mm]								[mm]	[N]		[°C]	[g]	
5	M10 x 1	21	51,0	5	17	5	15	12	6,0	14	250	43	22120.0615
6	M12 x 1,5	25	61,0	6	20	6	17	14	5,5	13	250	71	22120.0616
8	M16 x 1,5	31	75,5	7	26	8	23	19	11,5	28	250	144	22120.0618
10	M20 x 1,5	31	91,0	10	33	10	30	22	28,0	54	250	202	22120.0620

[1] statistical average value

ACCESSORIES

	Dimensions d_2 [mm]	Wrench size [mm]	[g]	Art. No. stainless steel
lock nuts ISO 8675 (DIN 439) for the following sizes				
	M10 x 1	16	5,2	22120.0515
	M12 x 1,5	18	7,4	22120.0516
	M16 x 1,5	24	18,0	22120.0518
	M20 x 1,5	30	32,0	22120.0520

Index Plungers • without hexagon collar

EH 22120.

PRODUCT DESCRIPTION

Index plungers are used for indexing bores.

Material

Body
- Free cutting steel, blackened
- Stainless steel 1.4305

Locking pin
- Steel, hardened
- Stainless steel 1.4305, nickel-plated

Knob
- Thermoplastic PA 6, black

Assembly

Suitable mounting tools are available.

MORE INFORMATION

Notes

Knob not removable.
Lock nuts have to be purchased separately.

Further products

Mounting Blocks, for index bolts and index plungers, die-cast. . . . . → p. 109
Locating Bushings, for index bolts and index plungers . . . . . → p. 111
Distance Collars, for index plungers . . → p. 122

DRAWING

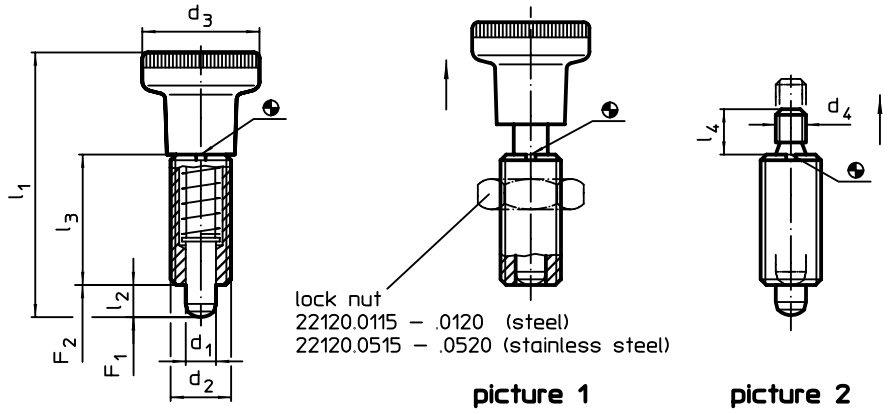

ORDER INFORMATION

Dimensions								Spring load[1]					Art. No.	
d_1 -0,02 -0,04	d_2	d_3	d_4	l_1 ~	l_2 min.	l_3	l_4	F_1 ~	F_2 ~	min.	max.		steel	stainless steel
[mm]								[N]		[°C]		[g]		
with knob – picture 1														
5	M10 x 1	21	–	45,0	5	22	–	6,0	14	-30	80	17	22120.0045	22120.0445
6	M12 x 1,5	25	–	54,5	6	26	–	5,5	13	-30	80	27	22120.0046	22120.0446
8	M16 x 1,5	31	–	69,0	8	34	–	11,5	28	-30	80	63	22120.0048	22120.0448
10	M20 x 1,5	31	–	80,0	10	41	–	23,0	54	-30	80	104	22120.0050	22120.0450
without knob – picture 2														
5	M10 x 1	–	M5	–	5	22	6	6,0	14	–	250	12	22120.0065	22120.0465
6	M12 x 1,5	–	M6	–	6	26	10	5,5	13	–	250	12	22120.0066	22120.0466
8	M16 x 1,5	–	M8	–	8	34	12	11,5	28	–	250	46	22120.0068	22120.0468
10	M20 x 1,5	–	M8	–	10	43	12	23,0	54	–	250	87	22120.0070	22120.0470

[1] statistical average value

2

ACCESSORIES

	Dimensions d_2 [mm]	Wrench size [mm]	[g]	Art. No. steel	Art. No. stainless steel
lock nuts ISO 8675 (DIN 439) for the following sizes					
	M10 x 1	16	5,2	22120.0115	22120.0515
	M12 x 1,5	18	7,4	22120.0116	22120.0516
	M16 x 1,5	24	18,0	22120.0118	22120.0518
	M20 x 1,5	30	32,0	22120.0120	22120.0520
mounting tool for the following sizes					
	M10 x 1	–	9,5	22120.0955	–
	M12 x 1,5	–	14,0	22120.0956	–
	M16 x 1,5	–	25,0	22120.0958	–
	M20 x 1,5	–	27,0	22120.0960	–

APPLICATION EXAMPLE

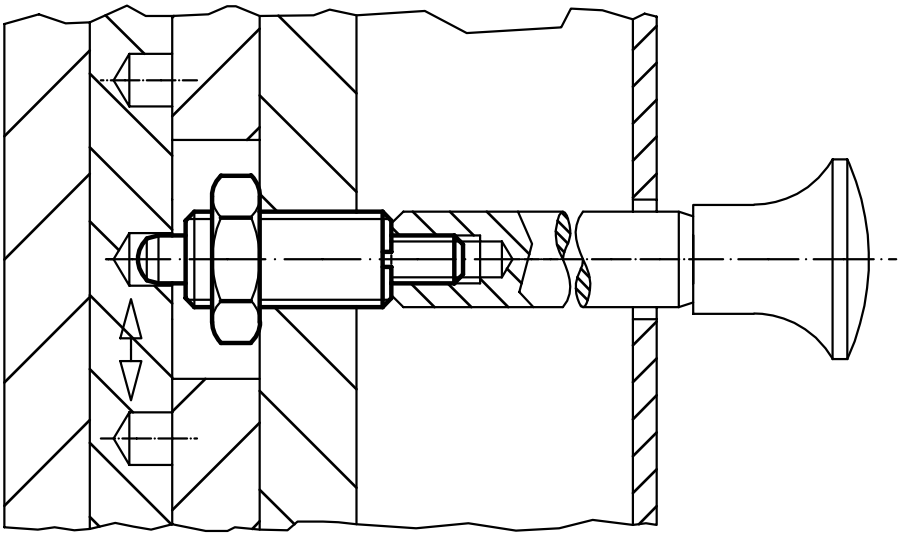

Index Plungers • without hexagon collar, stainless steel

EH 22120.

PRODUCT DESCRIPTION

Index plungers are used for indexing bores.

Material

Body
- Stainless steel 1.4305

Locking pin
- Stainless steel 1.4305, nickel-plated

Knob
- Stainless steel 1.4305

Assembly

Suitable mounting tools are available.

MORE INFORMATION

Notes

Knob not removable.
Lock nuts have to be purchased separately.

Further products

Mounting Blocks, for index bolts and index plungers, die-cast. . . . . → p. 109
Distance Collars, for index plungers . . → p. 122

DRAWING

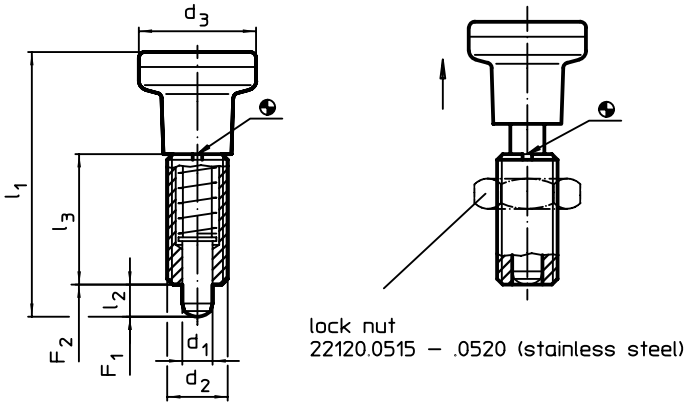

ORDER INFORMATION

Dimensions						Spring load[1]				Art. No.
d_1 -0,02 -0,04	d_2	d_3	l_1 ~	l_2 min.	l_3	F_1 ~	F_2 ~	max.		stainless steel
[mm]						[N]		[°C]	[g]	
5	M10 x 1	21	45,0	5	22	6,0	14	250	37	22120.0475
6	M12 x 1,5	25	54,5	6	26	5,5	13	250	62	22120.0476
8	M16 x 1,5	31	69,0	8	34	11,5	28	250	124	22120.0478
10	M20 x 1,5	31	80,0	10	41	23,0	54	250	165	22120.0480

[1] statistical average value

ACCESSORIES

	Dimensions d_2 [mm]	Wrench size [mm]	[g]	Art. No. stainless steel	Art. No. steel
lock nuts ISO 8675 (DIN 439) for the following sizes					
	M10 x 1	16	5,2	22120.0515	–
	M12 x 1,5	18	7,4	22120.0516	–
	M16 x 1,5	24	18,0	22120.0518	–
	M20 x 1,5	30	32,0	22120.0520	–
mounting tool for the following sizes					
	M10 x 1	–	9,5	–	22120.0955
	M12 x 1,5	–	14,0	–	22120.0956
	M16 x 1,5	–	25,0	–	22120.0958
	M20 x 1,5	–	27,0	–	22120.0960

2

Index Plungers • threadless, weldable

EH 22120.

PRODUCT DESCRIPTION

Index plungers are used for indexing bores.

Material

Body
- Steel, blackened, weldable

Locking pin
- Steel, hardened

Knob
- Thermoplastic PA 6, black

Assembly

Attached by welding or glueing.

MORE INFORMATION

Notes

Knob not removable.

Further products

Locating Bushings, for index bolts and index plungers . . . . . → p. 111

DRAWING

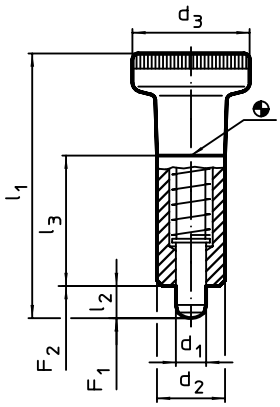

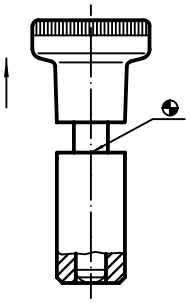

picture 1

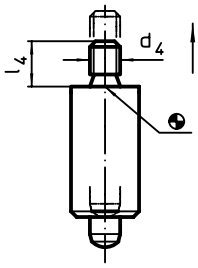

picture 2

ORDER INFORMATION

Dimensions								Spring load[1]					Art. No.
d_1 -0,02 -0,04	d_2 h9	d_3	d_4	l_1 ~	l_2 min.	l_3	l_4	F_1 ~	F_2 ~	min.	max.		
[mm]								[N]		[°C]		[g]	
with knob – picture 1													
5	12	21	–	45,0	5	22	–	7,0	16	-30	80	25	22120.0805
6	14	25	–	54,5	6	26	–	6,5	15	-30	80	40	22120.0806
8	18	31	–	69,0	8	34	–	12,0	31	-30	80	84	22120.0808
without knob – picture 2													
5	12	–	M5	–	5	22	6	7,0	16	–	250	19	22120.0825
6	14	–	M6	–	6	26	10	6,5	15	–	250	32	22120.0826
8	18	–	M8	–	8	34	12	12,0	31	–	250	67	22120.0828

[1] statistical average value

APPLICATION EXAMPLE

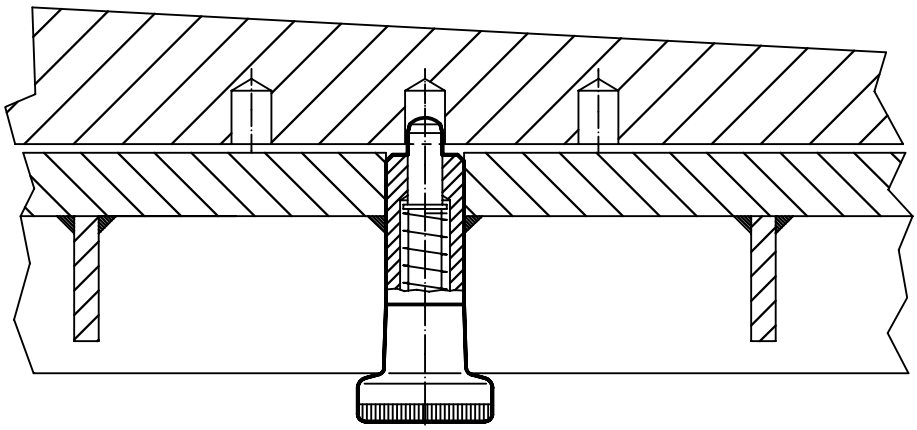

Index Plungers • with hexagon collar, short

EH 22120.

PRODUCT DESCRIPTION

Index plungers are used for indexing bores.
The small dimensions are a feature of these index plungers.

Material

Body
- Free cutting steel, blackened
- Stainless steel 1.4305

Locking pin
- Steel, hardened
- Stainless steel 1.4305, nickel-plated

Knob
- Thermoplastic PA 6, black, dull

Assembly

The screw length can be adapted by distance collars for index plungers (EH 22120.).

Operation

When using locking index plungers, the knob is pulled-out, turned 90° and secured by a notched catch (when locking pin should not overhang).

MORE INFORMATION

Notes

Knob not removable.
Lock nuts have to be purchased separately.

Further products

Locating Bushings, for index bolts and index plungers . . . . . → p. 111
Distance Collars, for index plungers . . → p. 122

DRAWING

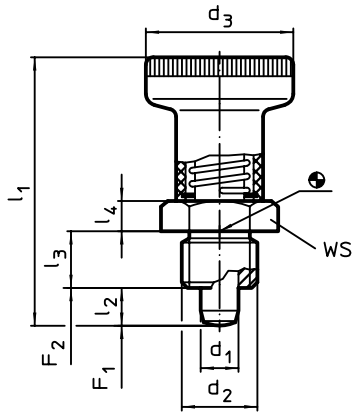

picture 1

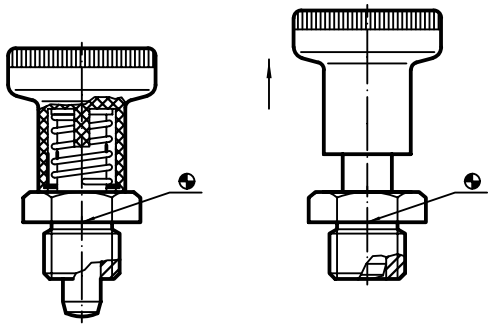

picture 2 with locking

ORDER INFORMATION

Dimensions							WS	Spring load[1]					Art. No.	
d_1 -0,02 -0,04	d_2	d_3	l_1 ~	l_2 min.	l_3 -0,15	l_4		F_1 ~	F_2 ~	min.	max.		steel	stainless steel
[mm]							[mm]	[N]		[°C]		[g]		
without locking – picture 1														
6	M12 x 1,5	25	45	6	10	5	17	7	19	-30	80	35	22120.0226	22120.0246
8	M16 x 1,5	31	54	8	12	6	19	14	24	-30	80	62	22120.0228	22120.0248
with locking – picture 2														
6	M12 x 1,5	25	45	6	10	5	17	7	19	-30	80	35	22120.0236	22120.0256
8	M16 x 1,5	31	54	8	12	6	19	14	24	-30	80	61	22120.0238	22120.0258

[1] statistical average value

ACCESSORIES

	Dimensions d_2 [mm]	Wrench size [mm]	[g]	Art. No. steel	Art. No. stainless steel
lock nuts ISO 8675 (DIN 439) for the following sizes					
	M12 x 1,5	18	7,4	22120.0116	22120.0516
	M16 x 1,5	24	18,0	22120.0118	22120.0518

2

Distance Collars • for index plungers

EH 22120.

PRODUCT DESCRIPTION

Distance collars adapt the thread of index plungers to different thread reaches.

Material

- Stainless steel 1.4305

DRAWING

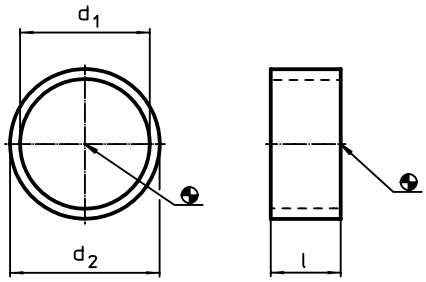

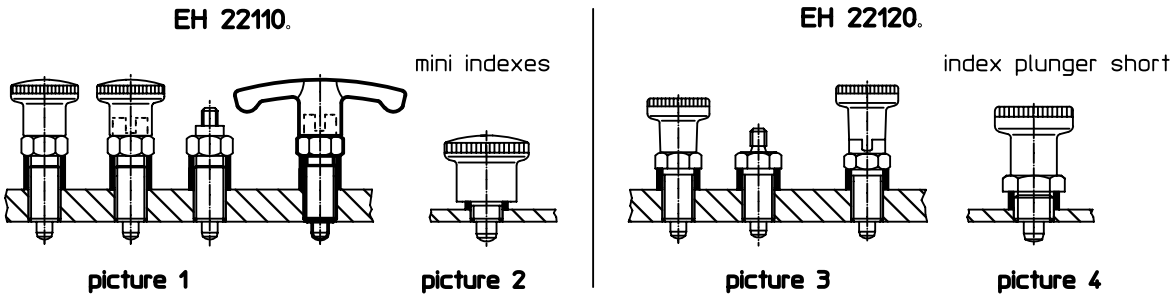

ORDER INFORMATION

Dimensions			For index plungers size	For finish picture	max.		Art. No.
d_1 H12	l ±0,1	d_2 -0,1					
[mm]			[mm]		[°C]	[g]	
8	2	10	M 8	1/2	250	0,52	22120.0632
	3	10	M 8	1	250	0,61	22120.0633
	4	10	M 8	1	250	1,10	22120.0634
	6	10	M 8	1	250	1,23	22120.0636
	8	10	M 8	1	250	1,60	22120.0638
	10	10	M 8	1	250	2,00	22120.0640
10	2	12	M10	1/2/3	250	0,62	22120.0642
	4	12	M10	1/2/3	250	1,10	22120.0644
	6	12	M10	1/3	250	1,50	22120.0646
	8	12	M10	1/3	250	2,10	22120.0648
	10	12	M10	1/3	250	2,32	22120.0650
	12	12	M10	1/3	250	3,00	22120.0652
12	2	14	M12	1	250	0,60	22120.0662
	4	14	M12	1	250	1,30	22120.0664
	6	14	M12	1	250	1,90	22120.0666
	8	14	M12	1	250	2,50	22120.0668
	2	17	M12	3/4	250	2,00	22120.0672
	4	17	M12	3/4	250	3,40	22120.0674
	5	17	M12	3/4	250	4,40	22120.0675

→

Dimensions			For index plungers size	For finish picture			Art. No.
d_1 H12	l ±0,1	d_2 -0,1			max.		
[mm]			[mm]		[°C]	[g]	
16	**4**	17	M16	1	250	0,70	22120.0676
	6	17	M16	1	250	1,00	22120.0677
	8	17	M16	1	250	1,40	22120.0678
	10	17	M16	1	250	2,00	22120.0679
	12	17	M16	1	250	2,10	22120.0680
	2	19	M16	3/4	250	1,20	22120.0682
	4	19	M16	3/4	250	2,80	22120.0684
	6	19	M16	3/4	250	3,80	22120.0686
	8	19	M16	3/4	250	4,80	22120.0688
	10	19	M16	3	250	6,10	22120.0690
	12	19	M16	3	250	7,50	22120.0692
20	**6**	22	M20	1/3	250	2,90	22120.0693
	8	22	M20	1/3	250	4,00	22120.0694
	10	22	M20	1/3	250	4,90	22120.0695
	12	22	M20	1/3	250	5,90	22120.0696
	14	22	M20	1/3	250	6,90	22120.0697
	16	22	M20	1/3	250	7,80	22120.0698
	18	22	M20	1/3	250	9,00	22120.0699

APPLICATION EXAMPLE

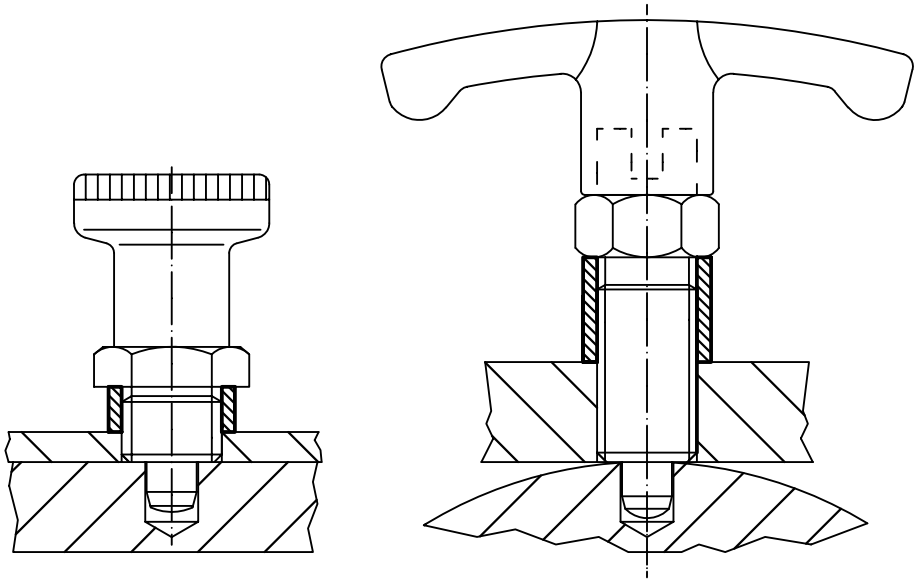

2

Index Plungers • with mounting flange

EH 22120.

PRODUCT DESCRIPTION

Index plungers are used for indexing bores.
For fixing onto thin walled parts.
The small dimensions are a feature of these index plungers.

Material

Flange
- Zinc die-cast, zinc-plated by galvanization

Locking pin
- Steel, hardened
- Stainless steel 1.4305, nickel-plated

Knob
- Thermoplastic PA 6, black, dull

Operation

When using locking index plungers the knob is pulled out and turned 90°.

MORE INFORMATION

Notes

Knob not removable.

Further products

Locating Bushings, for index bolts and index plungers . . . . . → p. 111

DRAWING

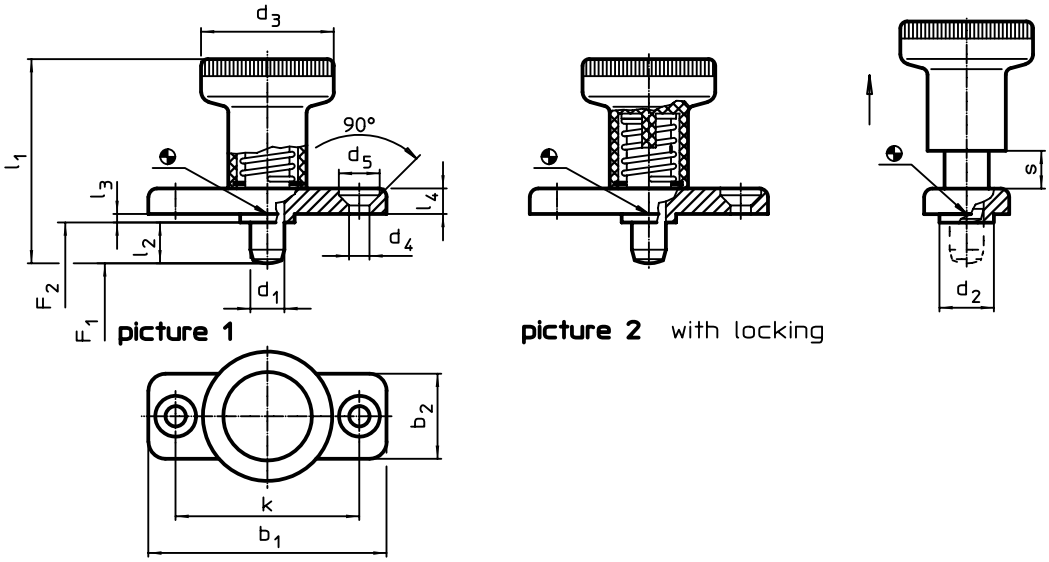

ORDER INFORMATION

Dimensions													Spring load[1]					Art. No.	
d_1 -0,02 -0,04	l_2	b_1	b_2	d_2 -0,02 -0,1	d_3	d_4	d_5	k	l_1	l_3 -0,15	l_4	s	F_1 ~	F_2 ~	min.	max.		steel	stainless steel
[mm]													[N]		[°C]		[g]		
without locking – picture 1																			
6	**6**	40	18	10	25	4,3	8,3	30	37	2,5	4,5	6	8,5	22	-30	80	26	22120.0926	22120.0966
	14	40	18	10	25	4,3	8,3	30	45	2,5	4,5	6	8,5	22	-30	80	38	22120.0927[2]	22120.0967[2]
8	**8**	46	20	12	31	5,3	10,4	34	44	2,5	5,5	8	15,5	28	-30	80	59	22120.0928	22120.0968
	18	46	20	12	31	5,3	10,4	34	54	2,5	5,5	8	15,5	28	-30	80	63	22120.0929[2]	22120.0969[2]
with locking – picture 2																			
6	**6**	40	18	10	25	4,3	8,3	30	37	2,5	4,5	6	8,5	22	-30	80	36	22120.0936	22120.0976
	14	40	18	10	25	4,3	8,3	30	45	2,5	4,5	6	8,5	22	-30	80	38	22120.0937[2]	22120.0977[2]
8	**8**	46	20	12	31	5,3	10,4	34	44	2,5	5,5	8	15,5	28	-30	80	60	22120.0938	22120.0978
	18	46	20	12	31	5,3	10,4	34	54	2,5	5,5	8	15,5	28	-30	80	63	22120.0939[2]	22120.0979[2]

[1] statistical average value
[2] Locking pin is not completely retractable

Index Plungers • simple finish

EH 22120.

PRODUCT DESCRIPTION

Application is limited to cases not requiring a precise positioning.
Simple finish with very small dimensions.

Material

Body
- Steel, zinc-plated by galvanization
- Stainless steel 1.4305

Locking pin
- Stainless steel 1.4305

Knob
- Thermoplastic PA 6, black, dull

Pull-ring
- Stainless steel 1.4310

Operation

When using locking index plungers, the knob is pulled-out, turned 90° and secured by a notched catch (when locking pin should not overhang).

MORE INFORMATION

Notes

Lock nuts have to be purchased separately.

Further products

Locating Bushings, for index bolts and index plungers . . . . . → p. 111

DRAWING

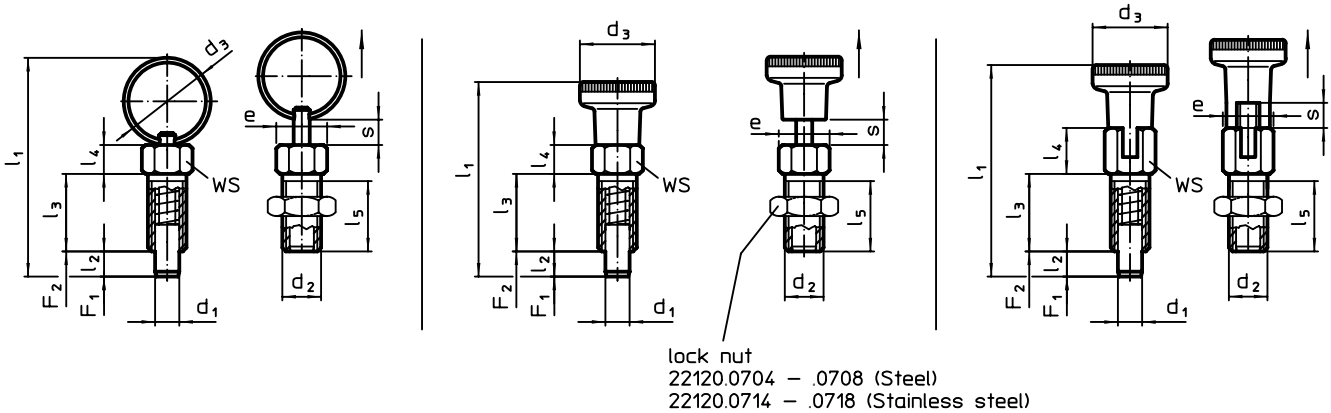

picture 1 picture 2 picture 3

ORDER INFORMATION

Dimensions										WS	Tight-ening torque	Spring load[1]					Art. No.	
d_1 h9	d_2	d_3	e	l_1	l_2 min.	l_3	l_4	l_5	s min.		max.	F_1 ~	F_2 ~	min.	max.		steel	stainless steel
[mm]										[mm]	[Nm]	[N]		[°C]		[g]		
with pull-ring, without locking – picture 1																		
3	M 6	14	6,9	34,0	3,5	12	4,5	10,0	3,5	6	2	3	12	–	250	3,2	22120.0723	22120.0773
4	M 6	14	6,9	34,5	4,0	12	4,5	10,0	4,0	6	2	3	12	–	250	3,6	22120.0724	22120.0774
5	M 8	18	9,2	45,0	5,0	16	6,0	13,5	5,0	8	7	5	24	–	250	8,4	22120.0725	22120.0775
6	M10	24	11,5	57,5	6,0	20	7,5	17,0	6,0	10	15	5	21	–	250	17,0	22120.0726	22120.0776
8	M12	30	13,8	71,0	8,0	24	9,0	20,5	8,0	12	20	6	22	–	250	31,0	22120.0728	22120.0778
with knob, without locking – picture 2																		
3	M 6	12	6,9	30,0	3,5	12	4,5	10,0	3,5	6	2	3	12	-30	80	3,6	22120.0743	22120.0783
4	M 6	12	6,9	30,5	4,0	12	4,5	10,0	4,0	6	2	3	12	-30	80	4,0	22120.0744	22120.0784
5	M 8	16	9,2	40,0	5,0	16	6,0	13,5	5,0	8	7	5	24	-30	80	9,2	22120.0745	22120.0785
6	M10	18	11,5	49,0	6,0	20	7,5	17,0	6,0	10	15	5	21	-30	80	18,0	22120.0746	22120.0786
8	M12	21	13,8	59,0	8,0	24	9,0	20,5	8,0	12	20	6	22	-30	80	31,0	22120.0748	22120.0788
with knob and locking – picture 3																		
3	M 6	12	6,9	32,5	3,5	12	7,0	10,0	3,5	6	2	3	12	-30	80	3,8	22120.0763	22120.0793
4	M 6	12	6,9	33,0	4,0	12	7,0	10,0	4,0	6	2	3	12	-30	80	4,2	22120.0764	22120.0794
5	M 8	16	9,2	43,5	5,0	16	9,5	13,5	5,0	8	7	5	24	-30	80	9,8	22120.0765	22120.0795
6	M10	18	11,5	52,0	6,0	20	10,5	17,0	6,0	10	15	5	21	-30	80	18,0	22120.0766	22120.0796
8	M12	21	13,8	63,5	8,0	24	13,5	20,5	8,0	12	20	6	22	-30	80	33,0	22120.0768	22120.0798

[1] statistical average value

2

ACCESSORIES

	Dimensions d_2 [mm]	Wrench size [mm]	[g]	Art. No. steel	Art. No. stainless steel
lock nuts ISO 4035 for the following sizes					
	M 6	10	1,3	22120.0704	22120.0714
	M 8	13	2,8	22120.0705	22120.0715
	M10	16	5,3	22120.0706	22120.0716
	M12	18	7,6	22120.0708	22120.0718

APPLICATION EXAMPLE

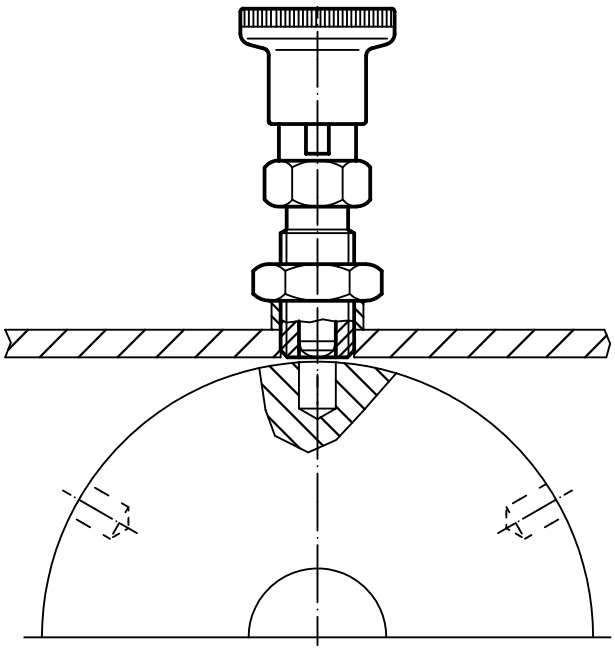

Index Plungers • for thin-walled pieces

EH 22120.

PRODUCT DESCRIPTION

Index plungers with throughgoing bore for thin-walled pieces.

Material

Body
- Steel, zinc-plated by galvanization

Locking pin
- Stainless steel 1.4305, nickel-plated

Knob
- Thermoplastic PA 6, black, dull

Assembly

By means of a fastening collet, the index plungers can be mounted into pieces having a wall thickness of 1-5 mm.

Operation

When using the self-locking type, the knob is pulled-out, turned 90° and secured by a notched catch. Depending on the clamping length, the bolt may overhang.

MORE INFORMATION

Notes

Knob not removable.

Further products

Locating Bushings, for index bolts and index plungers . . . . . → p. 111

DRAWING

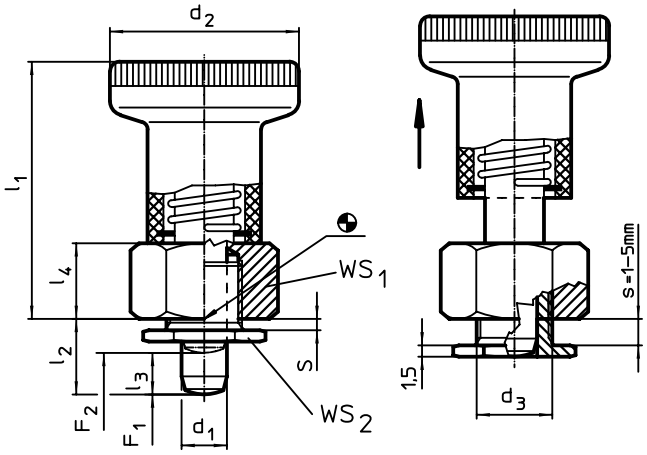

picture 1

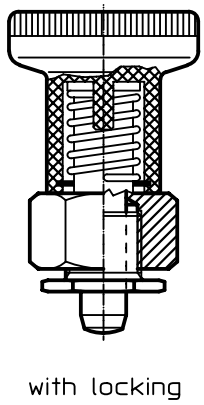

picture 2

ORDER INFORMATION

Dimensions								WS1	WS2	Spring load[1]					Art. No.
d1 -0,02 -0,04	l2	d2	d3	l1	l3	l4	s			F1 ~	F2 ~	min.	max.		
[mm]								[mm]	[mm]	[N]		[°C]		[g]	
without locking – picture 1															
6	**8,5**	25	10	34	6,0	10	1 – 5	17	14	8,5	22	-30	80	39	22120.0266
	10,5	25	10	34	6,0	10	1 – 5	17	14	8,5	22	-30	80	40	22120.0267
8	**10,0**	31	12	40	7,5	12	1 – 5	19	16	15,5	28	-30	80	63	22120.0268
	12,0	31	12	40	7,5	12	1 – 5	19	16	15,5	28	-30	80	63	22120.0269
with locking – picture 2															
6	**8,5**	25	10	34	6,0	10	1 – 5	17	14	8,5	22	-30	80	39	22120.0286
	10,5	25	10	34	6,0	10	1 – 5	17	14	8,5	22	-30	80	39	22120.0287
8	**10,0**	31	12	40	7,5	12	1 – 5	19	16	15,5	28	-30	80	61	22120.0288
	12,0	31	12	40	7,5	12	1 – 5	19	16	15,5	28	-30	80	62	22120.0289

[1] statistical average value

ACCESSORIES

	[g]	Art. No.
assembly tool		
	27	22120.0299

2

Index Plungers • with pull-ring

EH 22120.

PRODUCT DESCRIPTION

Index plungers are used for indexing bores.

Material

Body
- Steel, blackened
- Stainless steel 1.4305

Locking pin
- Stainless steel 1.4305, nickel-plated

Pull-ring
- Stainless steel 1.4310

Assembly

Lock nuts have to be purchased separately.

Operation

When using the model with locking mechanism, you turn the pull-ring by 90° after retracting the locking pin and secure the ring using the notched catch (if the locking pin should not overhang).

MORE INFORMATION

Further products

Mounting Blocks, for index bolts and index plungers, die-cast. . . . . → p. 109
Locating Bushings, for index bolts and index plungers . . . . . → p. 111
Distance Collars, for index plungers . . → p. 122
Mounting Blocks, for index bolts and index plungers . . . . . → p. 134

DRAWING

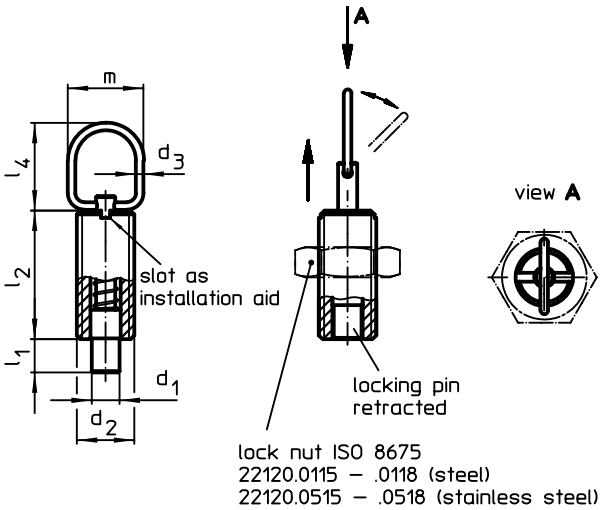

picture 1

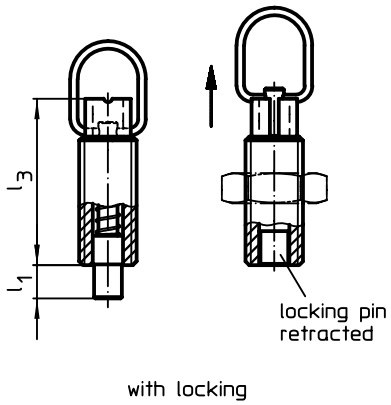

picture 2

ORDER INFORMATION

Dimensions								Stroke s	Spring load[1]				Art. No.	
d_1 -0,05 -0,1	d_2	d_3	l_1 min.	l_2	l_3	l_4	m		F_1 ~	F_2 ~	max.		steel	stainless steel
[mm]								[mm]	[N]		[°C]	[g]		
without locking – picture 1														
5	M10	1,5	5	22	28	23	18	5	5	15	250	11	22120.1310	22120.1410
	M10 x 1	1,5	5	22	28	23	18	5	5	15	250	12	22120.1312	22120.1412
6	M12	2,0	6	24	31	25	22	6	6	21	250	18	22120.1314	22120.1414
	M12 x 1,5	2,0	6	24	31	25	22	6	6	21	250	18	22120.1316	22120.1416
8	M16	2,0	9	34	44	25	22	9	7	27	250	43	22120.1318	22120.1418
	M16 x 1,5	2,0	9	34	44	25	22	9	7	27	250	45	22120.1320	22120.1420
10	M16	2,0	9	34	44	25	22	9	7	27	250	45	22120.1322	22120.1422
	M16 x 1,5	2,0	9	34	44	25	22	9	7	27	250	47	22120.1324	22120.1424

[1] statistical average value

→

Dimensions								Stroke s	Spring load[1]				Art. No.	
d_1 -0,05 -0,1	d_2	d_3	l_1 min.	l_2	l_3	l_4	m		F_1 ~	F_2 ~	max.		steel	stainless steel
[mm]								[mm]	[N]		[°C]	[g]		
with locking – picture 2														
5	**M10**	1,5	5	22	28	23	18	5	5	15	250	12	22120.1340	22120.1440
	M10 x 1	1,5	5	22	28	23	18	5	5	15	250	13	22120.1342	22120.1442
6	**M12**	2,0	6	24	31	25	22	6	6	21	250	19	22120.1344	22120.1444
	M12 x 1,5	2,0	6	24	31	25	22	6	6	21	250	20	22120.1346	22120.1446
8	**M16**	2,0	9	34	44	25	22	9	7	27	250	48	22120.1348	22120.1448
	M16 x 1,5	2,0	9	34	44	25	22	9	7	27	250	51	22120.1350	22120.1450
10	**M16**	2,0	9	34	44	25	22	9	7	27	250	50	22120.1352	22120.1452
	M16 x 1,5	2,0	9	34	44	25	22	9	7	27	250	53	22120.1354	22120.1454

[1] statistical average value

ACCESSORIES

	Dimensions d_2	Wrench size		Art. No.	
				steel	stainless steel
	[mm]	[mm]	[g]		
lock nuts ISO 4035 for the following sizes					
	M10	16	5,3	22120.0706	22120.0716
	M12	18	7,6	22120.0708	22120.0718
	M16	24	18,0	22120.0710	22120.0720
lock nuts ISO 8675 (DIN 439) for the following sizes					
	M10 x 1	16	5,2	22120.0115	22120.0515
	M12 x 1,5	18	7,4	22120.0116	22120.0516
	M16 x 1,5	24	18,0	22120.0118	22120.0518

APPLICATION EXAMPLE

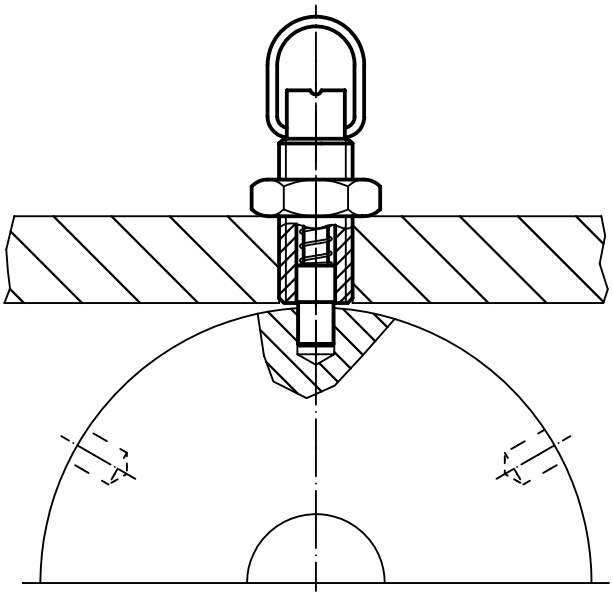

2

Index Plungers • with release lock

EH 22122.

PRODUCT DESCRIPTION

Index plungers are used for indexing bores.

Material

Body
- Steel, blackened
- Stainless steel 1.4305

Press button
- Thermoplastic POM, red

Locking pin
- Steel, hardened
- Stainless steel 1.4305, nickel-plated

Knob
- Thermoplastic PA 6, black-grey, matt

Assembly

The screw length can be adapted by distance collars for index plungers (EH 22120.).

Operation

Actuate the red press button, and hold it in the pressed position. Only then can the locking pin be drawn in by pulling the knob.

MORE INFORMATION

Notes

Knob not removable.
Lock nuts have to be purchased separately.

Further products

Locating Bushings, for index bolts and index plungers . . . . . → p. 111
Distance Collars, for index plungers . . → p. 122
Mounting Blocks, for index bolts and index plungers . . . . . → p. 134

DRAWING

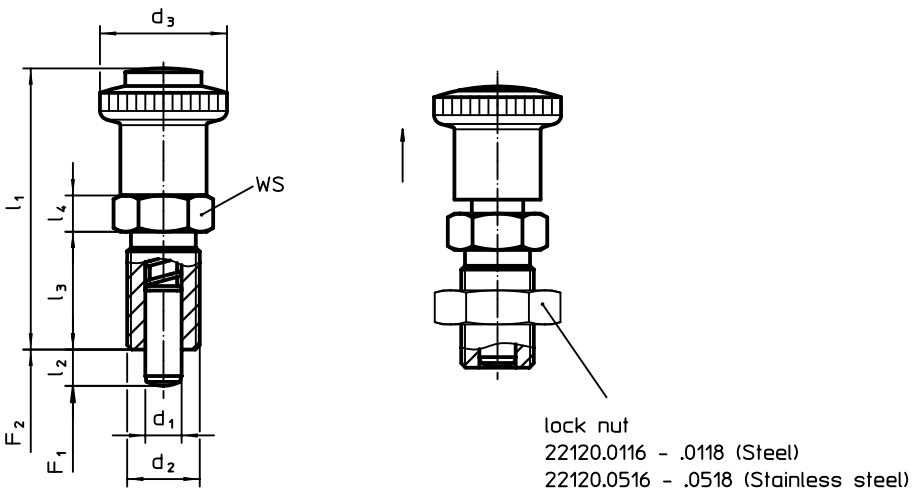

ORDER INFORMATION

Dimensions							WS	Spring load[1]					Art. No.	
d_1 -0,02 -0,04	d_2	l_2 min.	d_3	l_1 ~	l_3	l_4		F_1 ~	F_2 ~	min.	max.		steel	stainless steel
[mm]							[mm]	[N]		[°C]		[g]		
6	M12 x 1,5	6	28	56	22	6	19	6,5	19	-30	80	44	22122.0005	22122.0105
		9	28	56	22	6	19	6,0	25	-30	80	45	22122.0010	22122.0110
8	M16 x 1,5	8	28	62	26	8	19	8,5	26	-30	80	70	22122.0015	22122.0115
		12	28	62	26	8	19	8,5	28	-30	80	72	22122.0020	22122.0120
10	M16 x 1,5	12	28	62	26	8	19	9,5	38	-30	80	74	22122.0025	22122.0125

[1] statistical average value

ACCESSORIES

	Dimensions d_2 [mm]	Wrench size [mm]	[g]	Art. No. steel	Art. No. stainless steel
lock nuts ISO 8675 (DIN 439) for the following sizes					
	M12 x 1,5	18	7,4	22120.0116	22120.0516
	M16 x 1,5	24	18,0	22120.0118	22120.0518

Index Plungers • with rapid locking head

EH 22122.

PRODUCT DESCRIPTION

Index plungers are used for indexing bores.

Material

Body
- Steel, blackened
- Stainless steel 1.4305

Press button
- Thermoplastic POM, red

Locking pin
- Steel, hardened
- Stainless steel 1.4305, nickel-plated

Knob
- Thermoplastic PA 6, black-grey, matt

Assembly

The screw length can be adapted by distance collars for index plungers (EH 22120.).

Operation

The locking pin is drawn in and locked by pulling the knob. The projecting red press button indicates the locking position (locking pin drawn in). Pushing the red press button causes the locking pin to jump back into the locking position.

MORE INFORMATION

Notes

Knob not removable.
Lock nuts have to be purchased separately.

Further products

Locating Bushings, for index bolts and index plungers . . . . . → p. 111
Distance Collars, for index plungers . . → p. 122
Mounting Blocks, for index bolts and index plungers . . . . . → p. 134

DRAWING

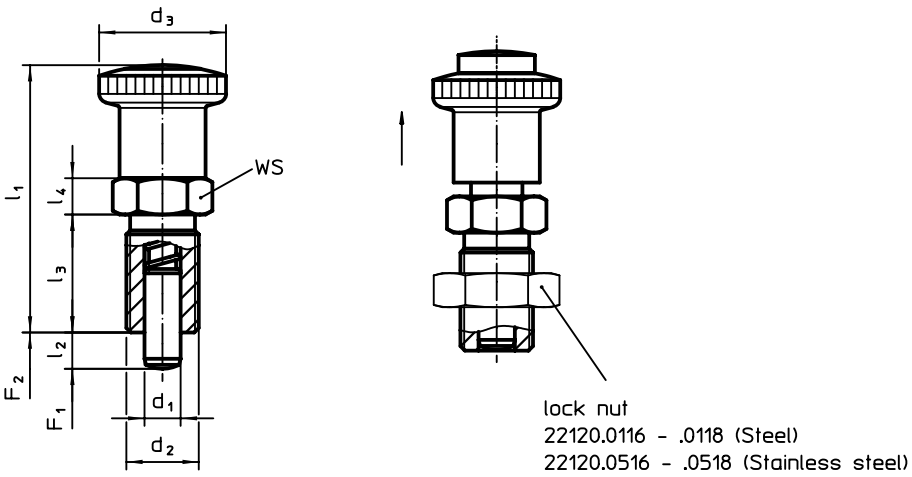

ORDER INFORMATION

Dimensions							WS	Spring load[1]					Art. No.	
d_1 -0,02 -0,04	d_2	l_2 min.	d_3	l_1 ~	l_3	l_4		F_1 ~	F_2 ~	min.	max.		steel	stainless steel
[mm]							[mm]	[N]		[°C]		[g]		
6	M12 x 1,5	6	30	53,5	22	6	19	6,5	19	-30	80	47	22122.0205	22122.0305
		9	30	53,5	22	6	19	6,0	25	-30	80	48	22122.0210	22122.0310
8	M16 x 1,5	8	30	59,5	26	8	19	8,5	26	-30	80	74	22122.0215	22122.0315
		12	30	59,5	26	8	19	8,5	28	-30	80	77	22122.0220	22122.0320
10	M16 x 1,5	12	30	59,5	26	8	19	9,5	38	-30	80	78	22122.0225	22122.0325

[1] statistical average value

ACCESSORIES

	Dimensions d_2 [mm]	Wrench size [mm]	[g]	Art. No. steel	Art. No. stainless steel
lock nuts ISO 8675 (DIN 439) for the following sizes					
	M12 x 1,5	18	7,4	22120.0116	22120.0516
	M16 x 1,5	24	18,0	22120.0118	22120.0518

2

Index Bolts

EH 22120.

PRODUCT DESCRIPTION

Index bolts are used for indexing purposes.
Plastic cover for grip allows better handling.

Material

Body
- Free cutting steel, blackened
- Stainless steel 1.4305

Locking pin
- Steel, hardened
- Stainless steel 1.4305, nickel-plated

Catch
- Free cutting steel, blackened
- Dry powdered metal 1.4404

Plastic cap
- Thermoplastic, black, dull

Operation

By turning the index bolt 180° the locking pin will be pulled-in and secured by a notched catch (when locking pin should not overhang).

MORE INFORMATION

Notes

Lock nuts have to be purchased separately.

Further products

Mounting Blocks, for index bolts and index plungers, die-cast. . . . . → p. 109
Locating Bushings, for index bolts and index plungers . . . . . → p. 111
Mounting Blocks, for index bolts and index plungers . . . . . → p. 134

DRAWING

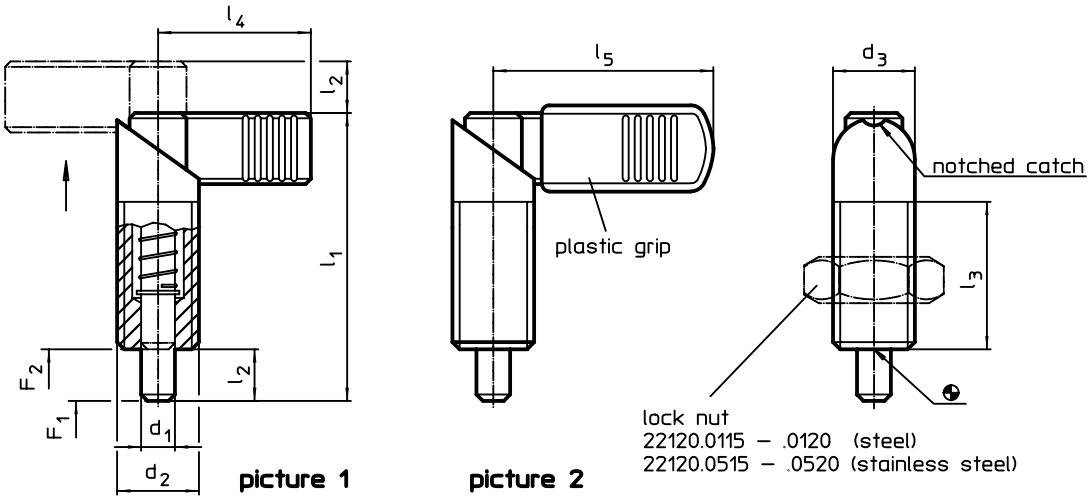

ORDER INFORMATION

Dimensions								Spring load[1]					Art. No.	
d_1 -0,02 -0,04	d_2	d_3	l_1	l_2	l_3	l_4	l_5	F_1 ~	F_2 ~	min.	max.		steel	stainless steel
[mm]								[N]		[°C]		[g]		
without plastic cover for grip – picture 1														
4	**M10 x 1**	10	37,5	6	19	21	–	7,0	20,0	–	250	17	22120.0302	22120.0308
5	**M10 x 1**	10	37,5	6	19	21	–	7,0	20,0	–	250	18	22120.0304	22120.0310
6	**M10 x 1**	10	37,5	6	19	21	–	7,0	20,0	–	250	18	22120.0306	22120.0312
5	**M12 x 1,5**	12	47,0	8	26	26	–	8,5	19,5	–	250	29	22120.0313	22120.0323
6	**M12 x 1,5**	12	47,0	8	26	26	–	8,5	19,5	–	250	29	22120.0314	22120.0324
	M16 x 1,5	16	56,0	10	30	32	–	11,5	30,5	–	250	59	22120.0316	22120.0326
8	**M12 x 1,5**	12	47,0	8	26	26	–	8,5	19,5	–	250	30	22120.0315	22120.0325
	M16 x 1,5	16	56,0	10	30	32	–	11,5	30,5	–	250	61	22120.0317	22120.0327
	M20 x 1,5	20	69,0	12	36	37	–	21,0	57,5	–	250	121	22120.0318	22120.0328
10	**M16 x 1,5**	16	56,0	10	30	32	–	11,5	30,5	–	250	64	22120.0319	22120.0329
	M20 x 1,5	20	69,0	12	36	37	–	21,0	57,5	–	250	123	22120.0320	22120.0330
12	**M20 x 1,5**	20	69,0	12	36	37	–	21,0	57,5	–	250	127	22120.0322	22120.0332

[1] statistical average value →

Dimensions								Spring load[1]					Art. No.	
d_1 -0,02 -0,04	d_2	d_3	l_1	l_2	l_3	l_4	l_5	F_1 ~	F_2 ~	min.	max.		steel	stainless steel
[mm]								[N]		[°C]		[g]		
with plastic cover for grip – picture 2														
5	**M12 x 1,5**	12	47,0	8	26	–	32	8,5	19,5	-30	80	30	22120.0353	22120.0363
6	**M12 x 1,5**	12	47,0	8	26	–	32	8,5	19,5	-30	80	30	22120.0354	22120.0364
	M16 x 1,5	16	56,0	10	30	–	42	11,5	30,5	-30	80	61	22120.0356	22120.0366
8	**M12 x 1,5**	12	47,0	8	26	–	32	8,5	19,5	-30	80	32	22120.0355	22120.0365
	M16 x 1,5	16	56,0	10	30	–	42	11,5	30,5	-30	80	63	22120.0357	22120.0367
	M20 x 1,5	20	69,0	12	36	–	52	21,0	57,5	-30	80	124	22120.0358	22120.0368
10	**M16 x 1,5**	16	56,0	10	30	–	42	11,5	30,5	-30	80	66	22120.0359	22120.0369
	M20 x 1,5	20	69,0	12	36	–	52	21,0	57,5	-30	80	128	22120.0360	22120.0370
12	**M20 x 1,5**	20	69,0	12	36	–	52	21,0	57,5	-30	80	131	22120.0362	22120.0372

[1] statistical average value

ACCESSORIES

	Dimensions d_2 [mm]	Wrench size [mm]	[g]	Art. No. steel	Art. No. stainless steel
lock nuts ISO 8675 (DIN 439) for the following sizes					
	M10 x 1	16	5,2	22120.0115	22120.0515
	M12 x 1,5	18	7,4	22120.0116	22120.0516
	M16 x 1,5	24	18,0	22120.0118	22120.0518
	M20 x 1,5	30	32,0	22120.0120	22120.0520

2

Mounting Blocks • for index bolts and index plungers

EH 22120.

PRODUCT DESCRIPTION

Assembly support and extended applications for index bolts.
Also usable for index plungers size 6, 8 and 10.

Material

Threaded pin
- Steel, blackened, with brass pad
- Stainless steel, with brass pad

Body
- Steel, blackened
- Stainless steel 1.4305

DRAWING

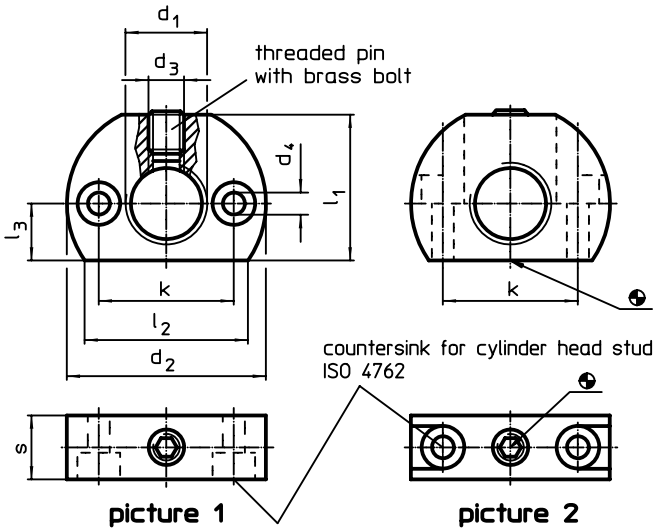

ORDER INFORMATION

Dimensions											Art. No.	
d_1	d_2	d_3	d_4	k ±0,1	l_1	l_2 ~	l_3	s	max. [°C]	[g]	steel	stainless steel
[mm]												
mounting hole parallel to index bolt and index plunger – picture 1												
M12 x 1,5	32	M5	4,5	21	22	26,5	9	12	250	43	22120.0345	22120.0545
M16 x 1,5	46	M8	5,5	32	33	38,0	13	15	250	122	22120.0346	22120.0546
M20 x 1,5	46	M8	5,5	32	33	38,0	13	15	250	109	22120.0350	22120.0550
mounting hole vertical to index bolt and index plunger – picture 2												
M12 x 1,5	32	M5	4,5	21	22	26,5	9	12	250	37	22120.0347	22120.0547
M16 x 1,5	46	M8	5,5	32	33	38,0	13	15	250	106	22120.0348	22120.0548
M20 x 1,5	46	M8	5,5	32	33	38,0	13	15	250	94	22120.0352	22120.0552

APPLICATION EXAMPLE

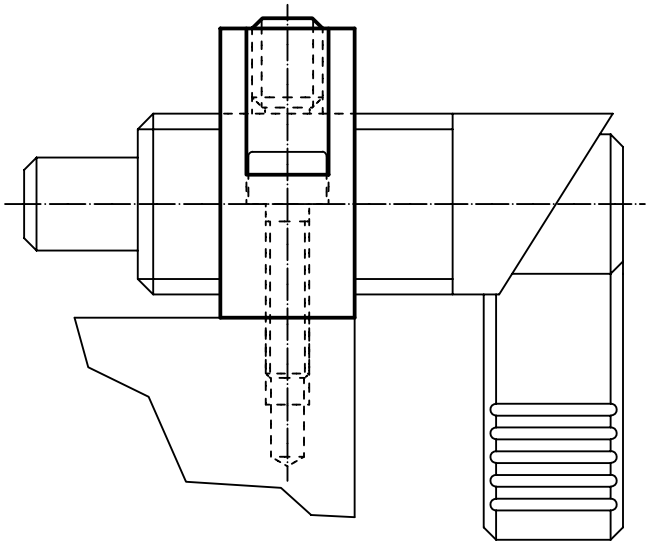

Index Bolts • with mounting flange

EH 22120.

PRODUCT DESCRIPTION

Index bolts are used for indexing purposes.
Plastic cover for grip allows better handling.

Material

Body
- Steel, blackened

Locking pin
- Steel, nitrided, black

Plastic cap
- Thermoplastic, black, dull

Assembly

Right and left mounting is possible due to countersinks on both sides.

Index bolt for lateral fastening.

Operation

By turning the index bolt 180° the locking pin will be pulled-in and secured by a notched catch (when locking pin should not overhang).

MORE INFORMATION

Further products

Locating Bushings, for index bolts and index plungers . . . . . → p. 111

DRAWING

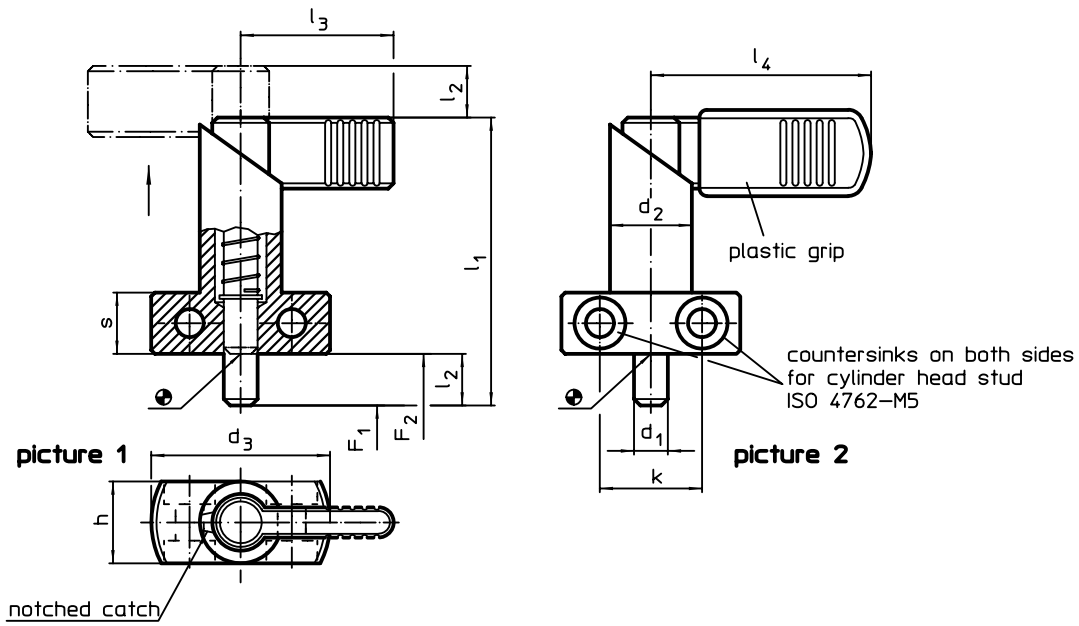

ORDER INFORMATION

Dimensions										Spring load[1]					Art. No.
d_1 0 -0,05	l_2	d_2	d_3	h	k	l_1	l_3	l_4	s	F_1 ~	F_2 ~	min.	max.		
[mm]										[N]		[°C]		[g]	
without plastic cover for grip – picture 1															
6	**10**	16	35	16	20	56	32	–	12	12	32	–	250	82	**22120.0376**
8	**10**	16	35	16	20	56	32	–	12	12	32	–	250	85	**22120.0378**
	12	20	40	20	22	69	37	–	15	21	58	–	250	163	**22120.0379**
10	**10**	16	35	16	20	56	32	–	12	12	32	–	250	85	**22120.0381**
	12	20	40	20	22	69	37	–	15	21	58	–	250	167	**22120.0382**
12	**12**	20	40	20	22	69	37	–	15	21	58	–	250	168	**22120.0384**
with plastic cover for grip – picture 2															
6	**10**	16	35	16	20	56	–	42	12	12	32	-30	80	83	**22120.0386**
8	**10**	16	35	16	20	56	–	42	12	12	32	-30	80	85	**22120.0388**
	12	20	40	20	22	69	–	52	15	21	58	-30	80	169	**22120.0389**
10	**10**	16	35	16	20	56	–	42	12	12	32	-30	80	86	**22120.0391**
	12	20	40	20	22	69	–	52	15	21	58	-30	80	171	**22120.0392**
12	**12**	20	40	20	22	69	–	52	15	21	58	-30	80	171	**22120.0394**

[1] statistical average value

2

Index Bolts • with mounting flange, horizontal

EH 22120.

PRODUCT DESCRIPTION

Index bolts are used for indexing purposes.

Material

Housing
- Zinc die-cast, plastic coated, black

Locking pin
- Steel, zinc-plated by galvanization

Catch
- Plastic

Assembly

Assembly by means of washers ISO 7092.

Operation

When using the model with locking mechanism, you pull out the bolt, turn it by 70° and secure it using the notched catch (if the locking pin should not overhang).

DRAWING

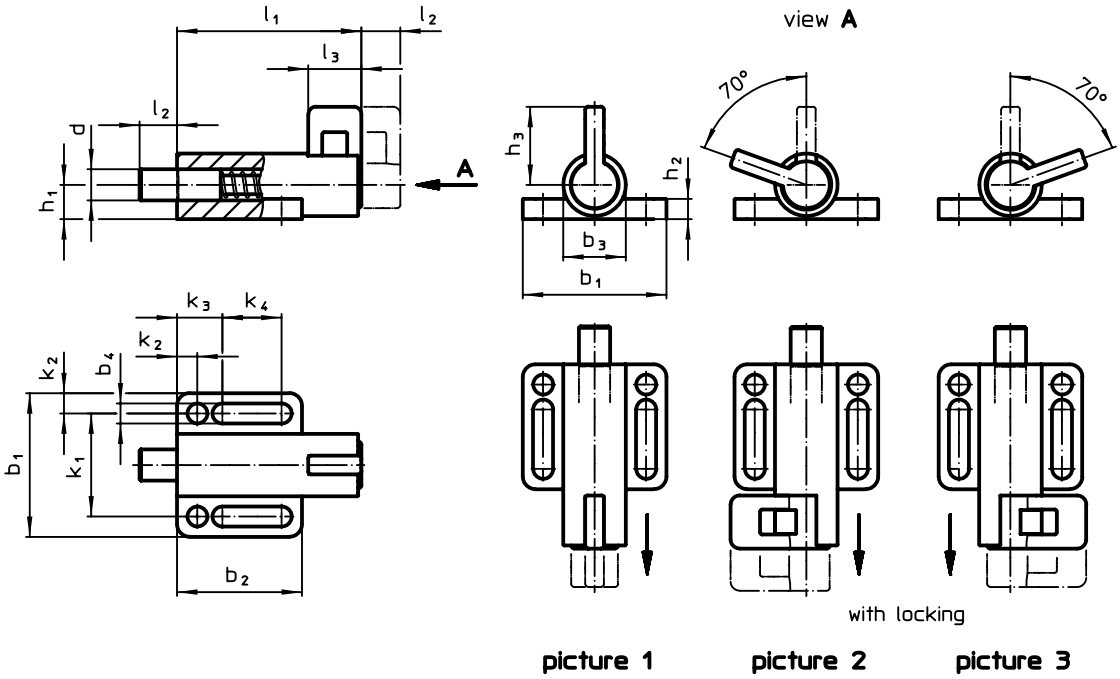

ORDER INFORMATION

Dimensions															Spring load[1]					Art. No.
d -0,05	l_2 min.	b_1	b_2	b_3	b_4	h_1	h_2	h_3	k_1	k_2	k_3	k_4	l_1	l_3	F_1 ~	F_2 ~	min.	max.		
[mm]															[N]		[°C]		[g]	
without locking – picture 1																				
6	**10**	38	32	16	5,4	8,5	6	23	27	5,5	12,0	14,5	57	14	21	27	-30	80	68	22120.1016
8	**10**	38	32	16	5,4	8,5	6	23	27	5,5	12,0	14,5	57	14	21	27	-30	80	69	22120.1020
	12	46	40	20	6,4	11,0	6	29	33	6,5	14,5	19,0	71	17	25	38	-30	80	131	22120.1024
10	**10**	38	32	16	5,4	8,5	6	23	27	5,5	12,0	14,5	57	14	21	27	-30	80	72	22120.1028
	12	46	40	20	6,4	11,0	6	29	33	6,5	14,5	19,0	71	17	25	38	-30	80	133	22120.1032
12	**12**	46	40	20	6,4	11,0	6	29	33	6,5	14,5	19,0	71	17	25	38	-30	80	137	22120.1036

[1] statistical average value

→

Dimensions															Spring load[1]					Art. No.
d -0,05	l_2 min.	b_1	b_2	b_3	b_4	h_1	h_2	h_3	k_1	k_2	k_3	k_4	l_1	l_3	F_1 ~	F_2 ~	min.	max.		
[mm]															[N]		[°C]		[g]	
with locking, left – picture 2																				
6	**10**	38	32	16	5,4	8,5	6	23	27	5,5	12,0	14,5	57	14	21	27	-30	80	67	**22120.1116**
8	**10**	38	32	16	5,4	8,5	6	23	27	5,5	12,0	14,5	57	14	21	27	-30	80	69	**22120.1120**
	12	46	40	20	6,4	11,0	6	29	33	6,5	14,5	19,0	71	17	25	38	-30	80	130	**22120.1124**
10	**10**	38	32	16	5,4	8,5	6	23	27	5,5	12,0	14,5	57	14	21	27	-30	80	71	**22120.1128**
	12	46	40	20	6,4	11,0	6	29	33	6,5	14,5	19,0	71	17	25	38	-30	80	133	**22120.1132**
12	**12**	46	40	20	6,4	11,0	6	29	33	6,5	14,5	19,0	71	17	25	38	-30	80	136	**22120.1136**
with locking, right – picture 3																				
6	**10**	38	32	16	5,4	8,5	6	23	27	5,5	12,0	14,5	57	14	21	27	-30	80	67	**22120.1216**
8	**10**	38	32	16	5,4	8,5	6	23	27	5,5	12,0	14,5	57	14	21	27	-30	80	69	**22120.1220**
	12	46	40	20	6,4	11,0	6	29	33	6,5	14,5	19,0	71	17	25	38	-30	80	130	**22120.1224**
10	**10**	38	32	16	5,4	8,5	6	23	27	5,5	12,0	14,5	57	14	21	27	-30	80	71	**22120.1228**
	12	46	40	20	6,4	11,0	6	29	33	6,5	14,5	19,0	71	17	25	38	-30	80	132	**22120.1232**
12	**12**	46	40	20	6,4	11,0	6	29	33	6,5	14,5	19,0	71	17	25	38	-30	80	136	**22120.1236**

[1] statistical average value

APPLICATION EXAMPLE

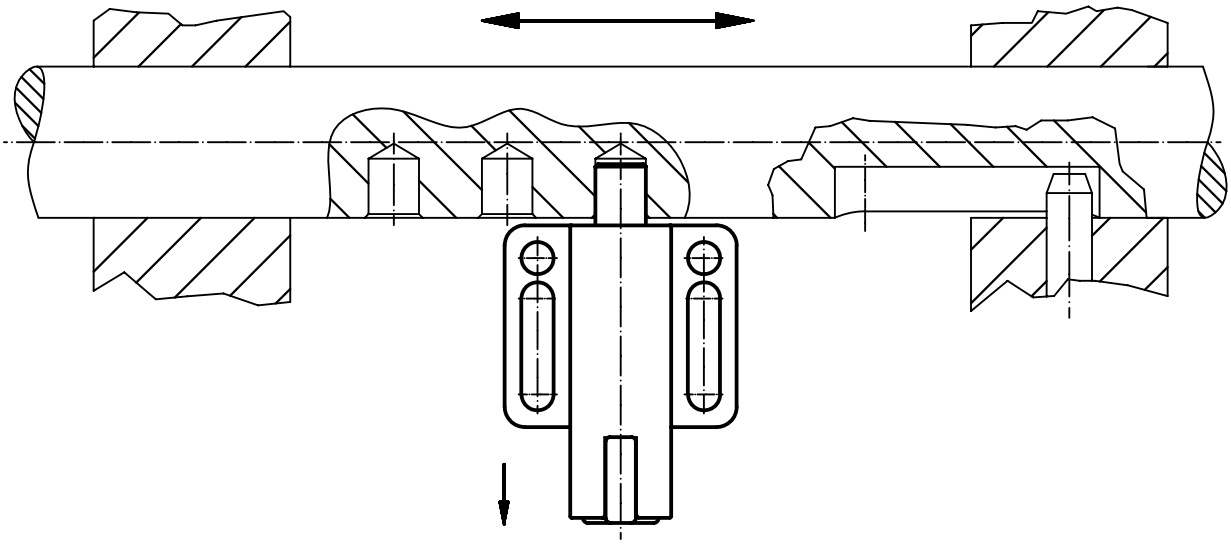

2

Index Bolts • simple finish

EH 22121.

PRODUCT DESCRIPTION

Index bolts are used for indexing purposes.
Application limited for cases in which no precise positioning is needed. The high stroke of the pin enables for a variety of applications, e.g. as door bolt.
Simple version in compact design.

Material

Body
- Free cutting steel, zinc-plated by galvanization

Locking pin
- Steel, zinc-plated by galvanization

Lock nut
- Steel, zinc-plated by galvanization

Operation

By lifting the index bolt the locking pin will be pulled in. The turning of the index bolt positions the pin when it is pulled in.

MORE INFORMATION

Notes

Lock nuts have to be purchased separately.

Further products

Locating Bushings, for index bolts and index plungers . . . . . → p. 111

DRAWING

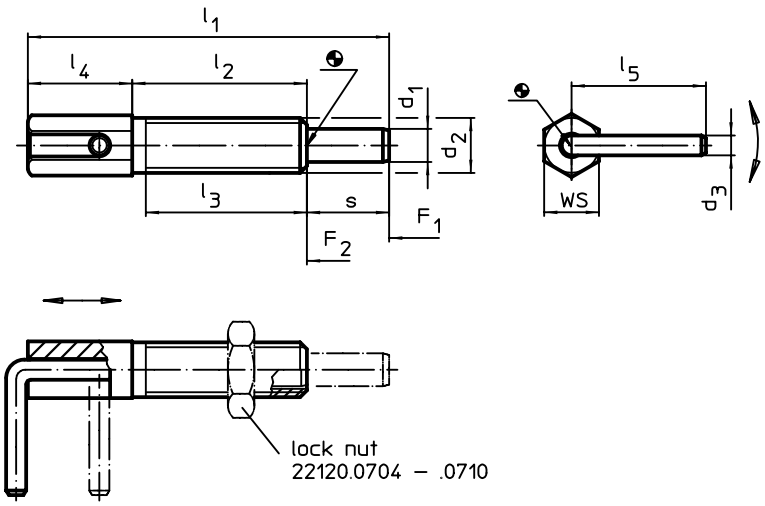

ORDER INFORMATION

Dimensions									WS	Spring load[1]		Tightening torque max.	max.		Art. No.
d_1	d_2	d_3	l_1	l_2	l_3	l_4	l_5	s		F_1 ~	F_2 ~				
[mm]									[mm]	[N]		[Nm]	[°C]	[g]	
4	**M 6**	2,3	41,5	20,0	17,0	12,0	15,5	9,5	6	3,0	10,0	1,6	250	6	22121.0105
5	**M 8**	3,0	54,0	27,0	24,0	15,0	19,2	12,0	8	3,5	13,5	4,5	250	14	22121.0110
6	**M10**	3,5	65,0	33,5	30,0	17,5	22,9	14,0	10	4,0	16,0	10,0	250	26	22121.0115
8	**M12**	4,7	73,0	31,8	28,0	22,2	31,2	19,0	12	4,0	22,0	13,0	250	55	22121.0120
10	**M16**	4,7	102,5	50,5	44,5	27,0	32,7	25,0	16	4,0	23,0	42,0	250	103	22121.0125

[1] statistical average value

ACCESSORIES

	Dimensions d_2 [mm]	Wrench size [mm]	[g]	Art. No. steel
lock nuts ISO 4035 for the following sizes				
	M 6	10	1,3	22120.0704
	M 8	13	2,8	22120.0705
	M10	16	5,3	22120.0706
	M12	18	7,6	22120.0708
	M16	24	18,0	22120.0710

Precision Index Plungers • with cylindrical pin

EH 22130.

PRODUCT DESCRIPTION

Precision index plungers together with bushings are a perfect combination for quick positioning and mounting.
The precise tolerance of both, the precision index plunger and the bushing, guarantees a high repeatability of these two elements.

Material

Pin
- Case-hardened steel, case-hardened, blackened and ground

Bushing
- Case-hardened steel, case-hardened, blackened and ground

Body
- Case-hardened steel, case-hardened, blackened and ground

Ball knob
- Thermoplastic, greyish black

Assembly

To achieve precise setting, ball grip and index plunger have to be glued after assembly.

Operation

When using locking index plungers the knob is pulled out and turned 90°.

DRAWING

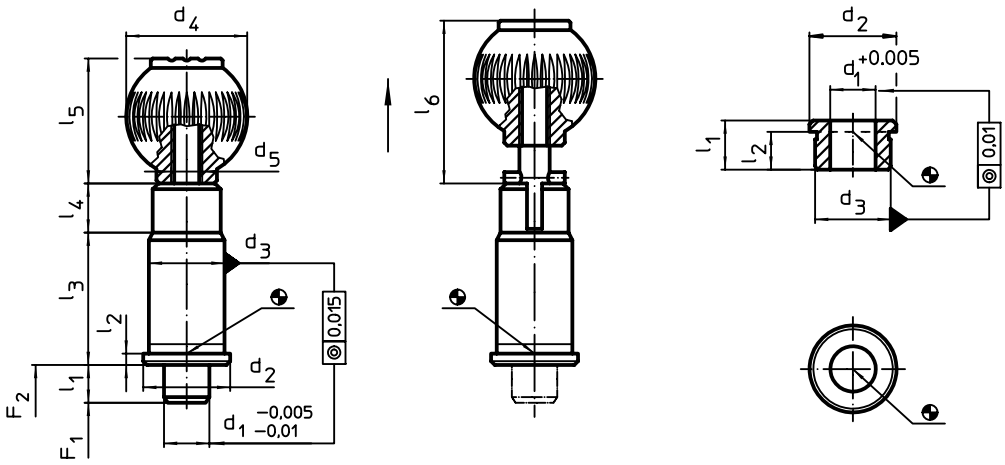

picture 1 picture 2 picture 3

ORDER INFORMATION

Dimensions											Spring load[1]			Art. No.
d_1 -0,005 -0,01	d_2	d_3 n6	d_4	d_5	l_1 min.	l_2	l_3	l_4	l_5	l_6	F_1 ~	F_2 ~		
[mm]											[N]		[g]	
without locking – picture 1														
10	19	16	25	M 6	10	2,5	31	13	25,0	–	15	30	79	22130.0010
12	23	20	32	M 8	10	3,0	35	13	33,0	–	15	35	138	22130.0012
16	28	25	40	M10	10	3,0	42	13	41,5	–	20	50	226	22130.0016
20	33	30	40	M10	10	3,0	50	13	41,5	–	36	63	350	22130.0020
25	42	38	50	M10	10	3,0	60	13	51,0	–	20	73	649	22130.0025
with locking – picture 2														
10	19	16	25	M 6	10	2,5	31	13	25,0	36,5	15	30	79	22130.0060
12	23	20	32	M 8	10	3,0	35	13	33,0	44,5	15	35	136	22130.0062
16	28	25	40	M10	10	3,0	42	13	41,5	53,0	20	50	228	22130.0066
20	33	30	40	M10	10	3,0	50	13	41,5	53,0	36	63	350	22130.0070
25	42	38	50	M10	10	3,0	60	13	51,0	62,5	20	73	650	22130.0075

[1] statistical average value

2

ACCESSORIES

	Dimensions						Art. No.
	d_1 +0,005	d_2	d_3 n6	l_1 min.	l_2	[g]	
	[mm]						
cylindrical bushing – picture 3							
	10	19	16	11	8,5	11	22130.0090
	12	23	20	13	10,0	22	22130.0092
	16	28	25	17	14,0	40	22130.0093
	20	33	30	16	13,0	51	22130.0094
	25	42	38	19	16,0	99	22130.0096

APPLICATION EXAMPLE

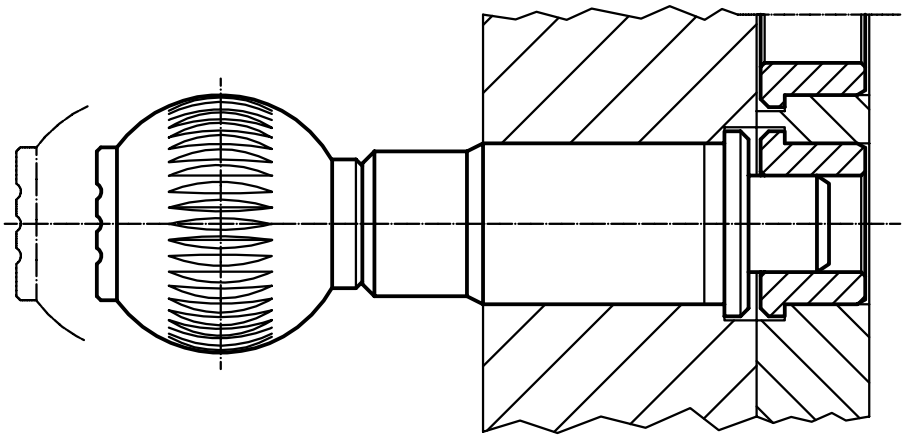

Precision Index Plungers • with tapered pin

EH 22130.

PRODUCT DESCRIPTION

Precision index plungers together with bushings are a perfect combination for quick positioning and mounting.
The precise tolerance of both, the precision index plunger and the bushing, guarantees a high repeatability of these two elements.

Material

Pin
- Case-hardened steel, case-hardened, blackened and ground

Bushing
- Case-hardened steel, case-hardened, blackened and ground

Body
- Case-hardened steel, case-hardened, blackened and ground

Ball knob
- Thermoplastic, greyish black

Assembly

To achieve precise setting, ball grip and index plunger have to be glued after assembly.

Operation

When using locking index plungers the knob is pulled out and turned 90°.

DRAWING

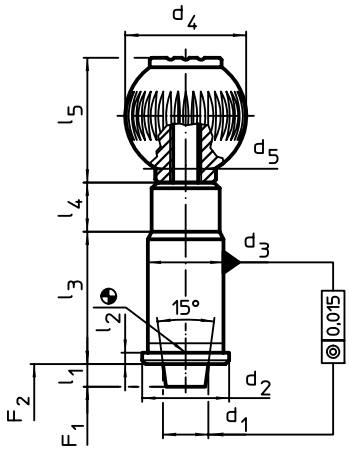

picture 1

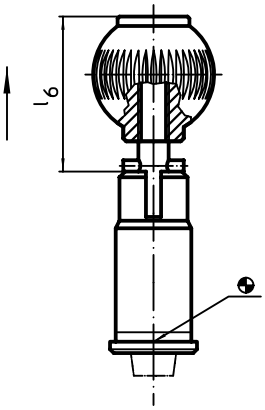

picture 2

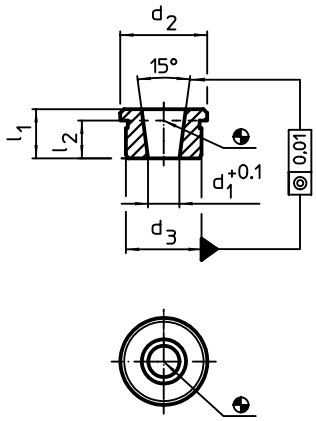

picture 3

ORDER INFORMATION

Nominal diameter	Dimensions											Spring load[1]			Art. No.
	d_1	d_2	d_3 n6	d_4	d_5	l_1 min.	l_2	l_3	l_4	l_5	l_6	F_1 ~	F_2 ~		
[mm]	[mm]											[N]		[g]	
without locking – picture 1															
10	10	19	16	25	M 6	6	2,5	31	13	25,0	–	19	29	78	22130.0110
12	12	23	20	32	M 8	6	3,0	35	13	33,0	–	22	35	135	22130.0112
16	16	28	25	40	M10	6	3,0	42	13	41,5	–	30	50	227	22130.0116
20	20	33	30	40	M10	6	3,0	50	13	41,5	–	46	63	348	22130.0120
25	25	42	38	50	M10	6	3,0	60	13	51,0	–	39	73	654	22130.0125
with locking – picture 2															
10	10	19	16	25	M 6	6	2,5	31	13	25,0	32,5	19	29	78	22130.0160
12	12	23	20	32	M 8	6	3,0	35	13	33,0	40,5	22	35	135	22130.0162
16	16	28	25	40	M10	6	3,0	42	13	41,5	49,0	30	50	228	22130.0166
20	20	33	30	40	M10	6	3,0	50	13	41,5	49,0	46	63	348	22130.0170
25	25	42	38	50	M10	6	3,0	60	13	51,0	58,5	39	73	651	22130.0175

[1] statistical average value

2

ACCESSORIES

	Nominal diameter	Dimensions						Art. No.
		d_1 +0,1	d_2	d_3 n6	l_1 min.	l_2		
	[mm]	[mm]					[g]	
tapered bushing – picture 3								
	10	**7,10**	19	16	11	8,5	13	**22130.0190**
	12	**8,28**	23	20	13	10,0	25	**22130.0192**
	16	**11,52**	28	25	17	14,0	47	**22130.0193**
	20	**15,49**	33	30	16	13,0	60	**22130.0194**
	25	**19,70**	42	38	19	16,0	114	**22130.0196**

APPLICATION EXAMPLE

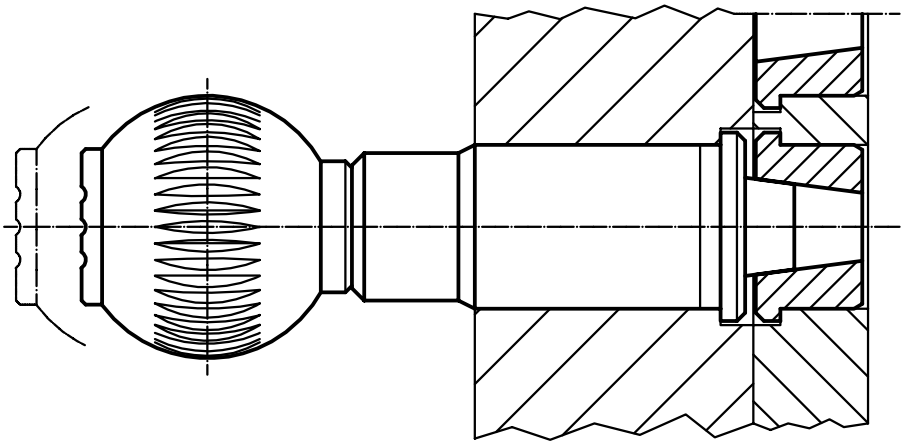

LATERAL PLUNGERS

METRIC MODELS

Our lateral plungers are the perfect choice for all applications that require you to position and press on workpieces. The models we offer also include screw-in and press-in options as well as versions that are sealed against chips and dirt.

2

Lateral Spring Plungers

EH 22140.

PRODUCT DESCRIPTION

To be used for positioning and applying pressure, e.g. during painting and sandblasting.

Material

Ball
- Stainless steel, hardened
- Thermoplastic POM, white
- Ball-bearing steel, hardened

Body
- Free cutting steel, blackened

Spring
- Stainless steel
- Plastic (PU)

Assembly

Insertion bore l_3 to be considered.

MORE INFORMATION

Notes

Special types on request.

DRAWING

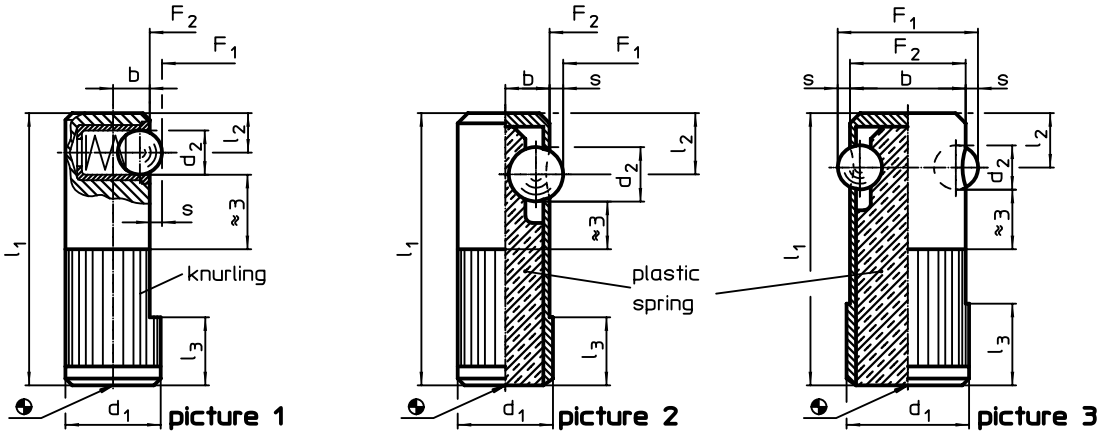

ORDER INFORMATION

Dimensions d_1 +0,1	d_2	l_1	l_2	l_3	b	Location hole H8	Stroke s	Spring load[1] F_1 ~	F_2 ~	min.	max.		Art. No.
[mm]						[mm]	[mm]	[N]		[°C]		[g]	
ball from stainless steel, standard spring load, one-sided – picture 1													
8	3,0	25	3,6	6	3,2	8	0,8	2,5	6,5	-30	50	9	22140.0008
10	4,0	30	4,2	7	4,0	10	1,0	4,5	9,0	-30	50	17	22140.0010
12	5,0	35	4,8	9	5,0	12	1,6	6,5	13,0	-30	50	29	22140.0012
14	6,5	40	5,8	10	5,4	14	1,9	8,0	18,0	-30	50	43	22140.0014
ball from thermoplastic, standard spring load, one-sided – picture 1													
8	3,0	25	3,6	6	3,2	8	0,8	2,5	6,5	-30	50	9	22140.0108
10	4,0	30	4,2	7	4,0	10	1,0	4,5	9,0	-30	50	17	22140.0110
12	5,0	35	4,8	9	5,0	12	1,6	6,5	13,0	-30	50	28	22140.0112
14	6,5	40	5,8	10	5,4	14	1,9	8,0	18,0	-30	50	42	22140.0114
ball from ball-bearing steel, heavy spring load, one-sided – picture 2													
10	5,5	30	7,0	8	4,5	10	1,0	60,0	170,0	-40	80	9	22140.0410
12	6,5	35	8,0	9	5,5	12	1,5	80,0	260,0	-40	80	14	22140.0412
14	8,0	40	9,0	10	6,5	14	2,0	120,0	480,0	-40	80	20	22140.0414
ball from ball-bearing steel, heavy spring load, on both sides – picture 3													
16	5,5	35	7,0	11	15,0	16	1,5	110,0	220,0	-40	80	21	22140.0616
18	6,5	40	8,0	12	17,0	18	1,8	120,0	330,0	-40	80	29	22140.0618
22	8,0	45	9,0	15	21,0	22	2,5	130,0	540,0	-40	80	45	22140.0622

[1] statistical average value

APPLICATION EXAMPLE

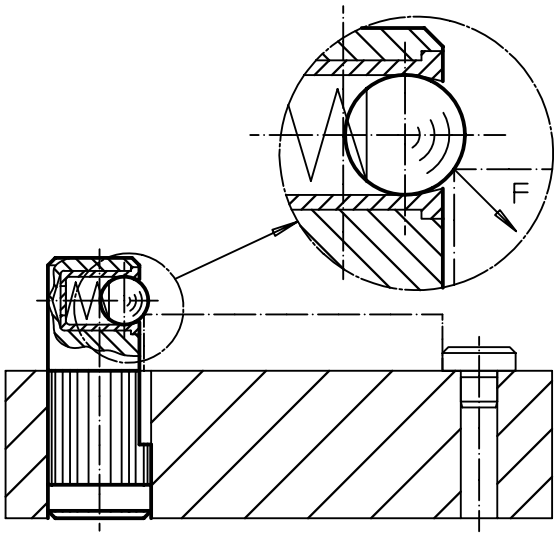

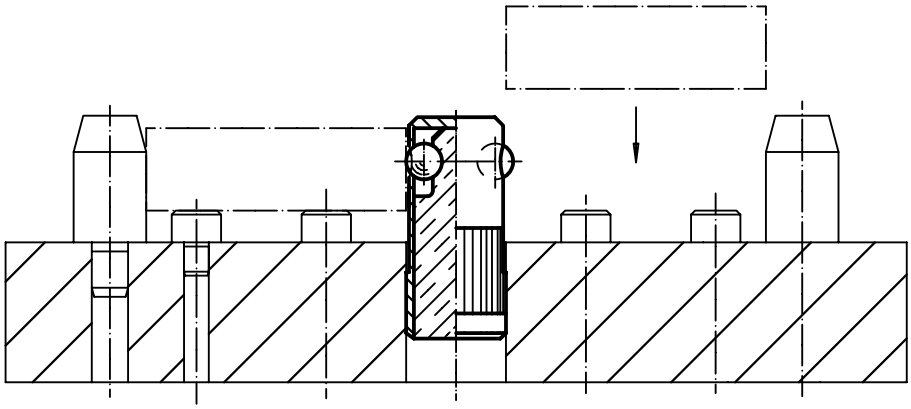

2

Lateral Plungers • smooth, without seal

EH 22150.

PRODUCT DESCRIPTION

To be used for positioning and applying pressure, e.g. during painting and sandblasting.

Material

Body
- Aluminium Al

Spring
- Stainless steel
- Steel, blackened
- Steel, zinc-plated by galvanization

Pin
- Steel, case-hardened, zinc-plated by galvanization
- Thermoplastic POM, white

Assembly

Installation by pressing in.
Formula for calculating the center distance for the mounting hole:
$l_0 = z/2 + w + x$,
l_0 = center distance,
y = workpiece height,
w = workpiece length,
x = coordinate dimension,
s = stroke,
z = stop diameter
Calculation dimension x:
y greater than or equal to $l_2 - d_2/2$, then
$x = d_2/2 - s$
or
y smaller than $l_2 - d_2/2$, then
$x = d_2/2 - s - [(l_2 - d_2/2 - y) * 0{,}123]$

Characteristic

Light spring load = spring from stainless steel
Standard spring load = spring from steel, blackened
Heavy spring load = spring from steel, zinc-plated by galvanization

MORE INFORMATION

Further products

Eccentric Mounting Bushings, for lateral plungers, smooth . . . . . → p. 154

DRAWING

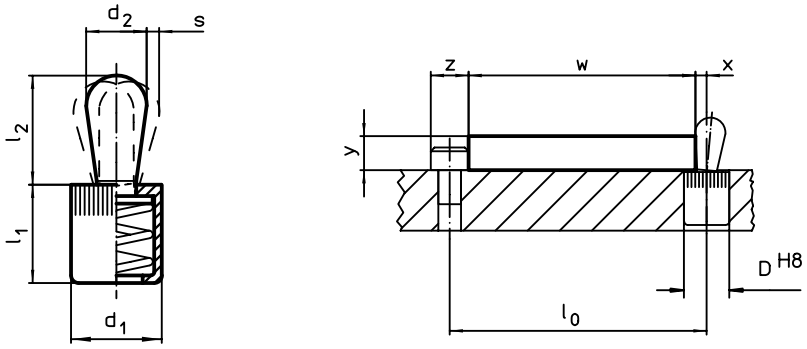

ORDER INFORMATION

Dimensions d_1 [mm]	Dimensions d_2 [mm]	Spring load F max.[1] ~ [N]	Dimensions l_1 -2 [mm]	Dimensions l_2 [mm]	Stroke s [mm]	Location hole D H8 [mm]	max. [°C]	[g]	Art. No.
pin: steel/light spring load									
6	**3**	**10**	7	4,0	1,0	6	250	0,60	**22150.0010**
10	**5**	**20**	11	6,7	1,6	10	250	2,60	**22150.0020**
	6	**40**	11	10,7	2,0	10	250	3,40	**22150.0025**
12	**8**	**50**	13	13,6	2,6	12	250	6,80	**22150.0030**
16	**10**	**100**	17	16,7	3,2	16	250	14,00	**22150.0040**
pin: steel/standard spring load									
6	**3**	**20**	7	4,0	1,0	6	250	0,63	**22150.0011**
10	**5**	**50**	11	6,7	1,6	10	250	2,80	**22150.0021**
	6	**75**	11	10,7	2,0	10	250	3,60	**22150.0026**
12	**8**	**100**	13	13,6	2,6	12	250	7,30	**22150.0031**
16	**10**	**150**	17	16,7	3,2	16	250	15,00	**22150.0041**
pin: steel/heavy spring load									
6	**3**	**40**	7	4,0	1,0	6	250	0,66	**22150.0012**
10	**5**	**100**	11	6,7	1,6	10	250	3,00	**22150.0022**
	6	**100**	11	10,7	2,0	10	250	3,90	**22150.0027**
12	**8**	**150**	13	13,6	2,6	12	250	7,80	**22150.0032**
16	**10**	**200**	17	16,7	3,2	16	250	15,00	**22150.0042**

[1] statistical average value

→

Dimensions d_1 [mm]	Dimensions d_2 [mm]	Spring load F max.[1] ~ [N]	Dimensions l_1 -2 [mm]	Dimensions l_2 [mm]	Stroke s [mm]	Location hole D H8 [mm]	max. [°C]	[g]	Art. No.
pin: thermoplastic/light spring load									
6	**3**	**10**	7	4,0	1,0	6	80	0,34	**22150.0050**
10	**5**	**20**	11	6,7	1,6	10	80	1,30	**22150.0060**
	6	**40**	11	10,7	2,0	10	80	1,54	**22150.0062**
12	**8**	**50**	13	13,9	2,6	12	80	2,90	**22150.0070**
16	**10**	**100**	17	16,7	3,2	16	80	6,60	**22150.0080**

[1] statistical average value

ACCESSORIES

	Dimensions d_1 [mm]	[g]	Art. No.
assembly tool			
	6	19	**22150.0830**
	10	49	**22150.0831**
	12	65	**22150.0832**
	16	105	**22150.0833**

APPLICATION EXAMPLE

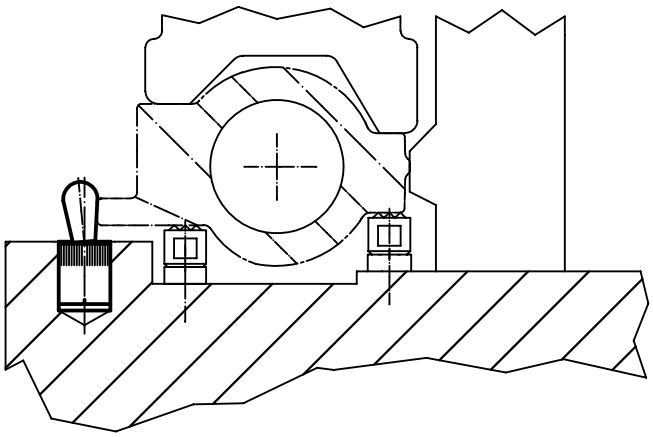

2

Lateral Plungers • smooth, with seal

EH 22150.

PRODUCT DESCRIPTION

To be used for positioning and applying pressure, e.g. during painting and sandblasting. Sealed against chips and dirt.

Material

Seal
- CR

Body
- Aluminium Al

Spring
- Stainless steel
- Steel, blackened
- Steel, zinc-plated by galvanization

Pin
- Steel, case-hardened, zinc-plated by galvanization
- Thermoplastic POM, white

Assembly

Installation by pressing in.
Formula for calculating the center distance for the mounting hole:
$l_0 = z/2 + w + x$,
l_0 = center distance,
y = workpiece height,
w = workpiece length,
x = coordinate dimension,
s = stroke,
z = stop diameter
Calculation dimension x:
y greater than or equal to $l_2 - d_2/2$, then
$x = d_2/2 - s$
or
y smaller than $l_2 - d_2/2$, then
$x = d_2/2 - s - [(l_2 - d_2/2 - y) * 0{,}123]$

Characteristic

Light spring load = spring from stainless steel
Standard spring load = spring from steel, blackened
Heavy spring load = spring from steel, zinc-plated by galvanization

MORE INFORMATION

Further products

Eccentric Mounting Bushings, for lateral plungers, smooth . . . . . → p. 154

DRAWING

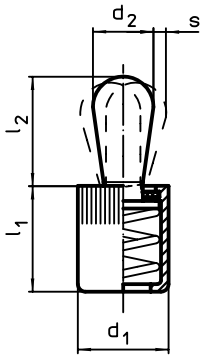

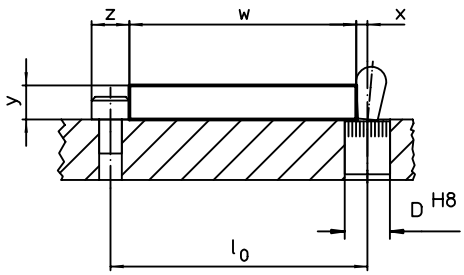

ORDER INFORMATION

Dimensions d_1 [mm]	Dimensions d_2 [mm]	Spring load F max.[1] ~ [N]	Dimensions l_1 -2 [mm]	Dimensions l_2 [mm]	Stroke s [mm]	Location hole D H8 [mm]	max. [°C]	[g]	Art. No.
pin: steel/light spring load									
6	**3**	**10**	7	3,7	1,0	6	110	0,60	**22150.0110**
10	**5**	**20**	12	6,0	1,6	10	110	2,60	**22150.0120**
	6	**40**	12	10,0	2,0	10	110	3,40	**22150.0125**
12	**8**	**50**	14	13,0	2,6	12	110	6,90	**22150.0130**
16	**10**	**100**	18	16,4	3,2	16	110	15,00	**22150.0140**
pin: steel/standard spring load									
6	**3**	**20**	7	3,7	1,0	6	110	0,60	**22150.0111**
10	**5**	**50**	12	6,0	1,6	10	110	2,90	**22150.0121**
	6	**75**	12	10,0	2,0	10	110	3,60	**22150.0126**
12	**8**	**100**	14	13,0	2,6	12	110	7,50	**22150.0131**
16	**10**	**150**	18	16,4	3,2	16	110	15,00	**22150.0141**
pin: steel/heavy spring load									
6	**3**	**40**	7	3,7	1,0	6	110	0,70	**22150.0112**
10	**5**	**100**	12	6,0	1,6	10	110	3,00	**22150.0122**
	6	**100**	12	10,0	2,0	10	110	3,90	**22150.0127**
12	**8**	**150**	14	13,0	2,6	12	110	7,90	**22150.0132**
16	**10**	**200**	18	16,4	3,2	16	110	16,00	**22150.0142**

[1] statistical average value →

Dimensions d_1 [mm]	Dimensions d_2 [mm]	Spring load F max.[1] ~ [N]	Dimensions l_1 -2 [mm]	Dimensions l_2 [mm]	Stroke s [mm]	Location hole D H8 [mm]	max. [°C]	[g]	Art. No.
pin: thermoplastic/light spring load									
6	**3**	**10**	7	3,7	1,0	6	80	0,46	**22150.0150**
10	**5**	**20**	12	6,0	1,6	10	80	1,40	**22150.0160**
	6	**40**	12	10,0	2,0	10	80	1,60	**22150.0165**
12	**8**	**50**	14	13,0	2,6	12	80	2,92	**22150.0170**
16	**10**	**100**	18	16,4	3,2	16	80	7,30	**22150.0180**

[1] statistical average value

ACCESSORIES

	Dimensions d_1 [mm]	[g]	Art. No.
assembly tool			
	6	19	**22150.0830**
	10	49	**22150.0831**
	12	65	**22150.0832**
	16	105	**22150.0833**

APPLICATION EXAMPLE

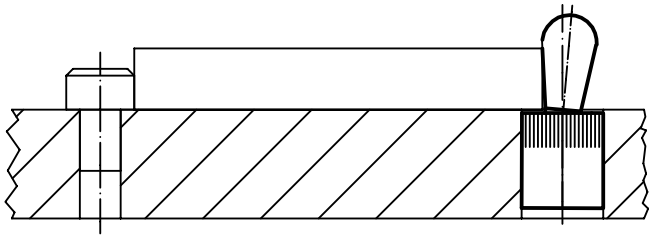

2

Lateral Plungers • with plastic spring and pin

EH 22150.

PRODUCT DESCRIPTION

To be used for positioning and applying pressure, e.g. during painting and sandblasting.

Material

Spring
- Plastic

Pin
- Steel, case-hardened, blackened
- Stainless steel
- Thermoplastic POM, white

Assembly

It is recommended to moisten the body.
Installation by pressing in.
Formula for calculating the center distance for the mounting hole:
$l_0 = z/2 + w + x$,
l_0 = center distance,
y = workpiece height,
w = workpiece length,
x = coordinate dimension,
s = stroke,
z = stop diameter
Calculation dimension x:
y greater than or equal to $l_2 - d_2/2$, then
$x = d_2/2 - s$
or
y smaller than $l_2 - d_2/2$, then
$x = d_2/2 - s - [(l_2 - d_2/2 - y) * 0{,}123]$

Characteristic

Light spring load = blue spring
Standard spring load = red spring
Heavy spring load = green spring

DRAWING

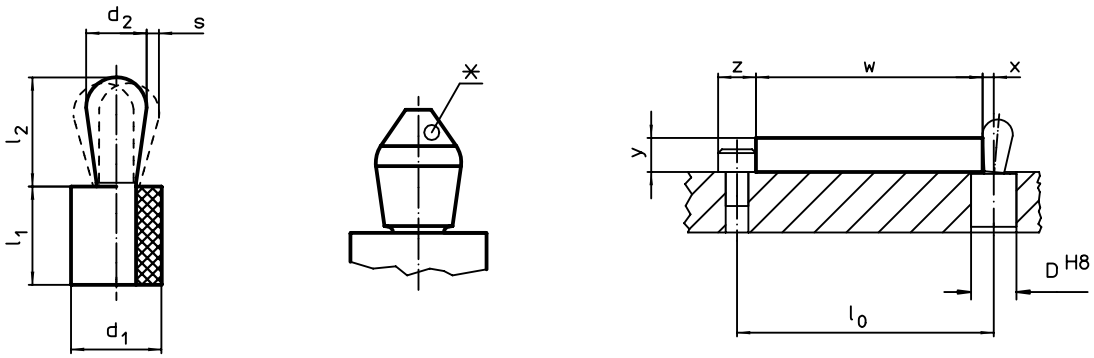

*some sizes (see chart) have a deviating pin shape

ORDER INFORMATION

Dimensions d_1 [mm]	Dimensions d_2 [mm]	Spring load F max.[1] ~ [N]	Dimensions l_1 -1 [mm]	Dimensions l_2 ±0,5 [mm]	Stroke s [mm]	Location hole D H8 [mm]	max. [°C]	[g]	Art. No.
pin: steel/light spring load									
6	**3**	**10**	7	3,7	0,4	5,9	100	0,54	**22150.0200**[2]
8	**4**	**15**	9	5,2	0,6	7,9	100	1,20	**22150.0202**
10	**5**	**30**	9	7,3	0,8	9,9	100	2,10	**22150.0204**
	6	**20**	9	10,3	1,0	9,9	100	2,90	**22150.0207**
pin: steel/standard spring load									
6	**3**	**20**	7	3,7	0,4	5,9	100	0,52	**22150.0201**[2]
8	**4**	**30**	9	5,2	0,6	7,9	100	1,20	**22150.0203**
10	**5**	**60**	9	7,3	0,8	9,9	100	2,10	**22150.0205**
	6	**30**	9	10,3	1,0	9,9	100	2,90	**22150.0208**
12	**8**	**50**	13	13,3	1,2	11,9	100	6,80	**22150.0211**
16	**10**	**80**	16	16,9	1,6	15,9	100	15,00	**22150.0213**
pin: steel/heavy spring load									
10	**5**	**90**	9	7,3	0,8	9,9	100	2,10	**22150.0206**
	6	**60**	9	10,3	1,0	9,9	100	2,90	**22150.0209**
12	**8**	**100**	13	13,3	1,2	11,9	100	6,80	**22150.0212**
16	**10**	**160**	16	16,9	1,6	15,9	100	15,00	**22150.0214**

[1] statistical average value
[2] deviating pin shape (see drawing)

→

Dimensions d_1 [mm]	Dimensions d_2 [mm]	Spring load F max.[1] ~ [N]	Dimensions l_1 -1 [mm]	Dimensions l_2 ±0,5 [mm]	Stroke s [mm]	Location hole D H8 [mm]	max. [°C]	[g]	Art. No.
pin: stainless steel/light spring load									
6	**3**	**10**	7	3,7	0,4	5,9	100	0,52	**22150.0215**[2]
8	**4**	**15**	9	5,2	0,6	7,9	100	1,20	**22150.0217**
10	**5**	**30**	9	7,3	0,8	9,9	100	2,10	**22150.0219**
	6	**20**	9	10,3	1,0	9,9	100	2,90	**22150.0222**
pin: stainless steel/standard spring load									
6	**3**	**20**	7	3,7	0,4	5,9	100	0,51	**22150.0216**[2]
8	**4**	**30**	9	5,2	0,6	7,9	100	1,20	**22150.0218**
10	**5**	**60**	9	7,3	0,8	9,9	100	2,10	**22150.0220**
	6	**30**	9	10,3	1,0	9,9	100	2,90	**22150.0223**
12	**8**	**50**	13	13,3	1,2	11,9	100	6,80	**22150.0226**
16	**10**	**80**	16	16,9	1,6	15,9	100	15,00	**22150.0228**
pin: stainless steel/heavy spring load									
10	**5**	**90**	9	7,3	0,8	9,9	100	2,10	**22150.0221**
	6	**60**	9	10,3	1,0	9,9	100	2,90	**22150.0224**
12	**8**	**100**	13	13,2	1,2	11,9	100	6,80	**22150.0227**
16	**10**	**160**	16	16,6	1,6	15,9	100	15,00	**22150.0229**
pin: thermoplastic/light spring load									
6	**3**	**10**	7	3,7	0,4	5,9	80	0,26	**22150.0230**[2]
8	**4**	**15**	9	5,2	0,6	7,9	80	0,61	**22150.0232**
10	**5**	**30**	9	7,3	0,8	9,9	80	0,99	**22150.0234**
	6	**20**	9	10,3	1,0	9,9	80	1,10	**22150.0237**
pin: thermoplastic/standard spring load									
6	**3**	**20**	7	3,7	0,4	5,9	80	0,27	**22150.0231**[2]
8	**4**	**30**	9	5,2	0,6	7,9	80	0,59	**22150.0233**
10	**5**	**60**	9	7,3	0,8	9,9	80	0,95	**22150.0235**
	6	**30**	9	10,3	1,0	9,9	80	1,00	**22150.0238**
12	**8**	**50**	13	13,3	1,2	11,9	80	0,23	**22150.0240**
16	**10**	**80**	16	16,9	1,6	15,9	80	0,49	**22150.0242**
pin: thermoplastic/heavy spring load									
10	**5**	**90**	9	7,3	0,8	9,9	80	0,97	**22150.0236**
	6	**60**	9	10,3	1,0	9,9	80	0,11	**22150.0239**
12	**8**	**100**	13	13,3	1,2	11,9	80	0,23	**22150.0241**
16	**10**	**160**	16	16,9	1,6	15,9	80	0,51	**22150.0243**

[1] statistical average value
[2] deviating pin shape (see drawing)

ACCESSORIES

	Dimensions d_1 [mm]	[g]	Art. No.
assembly tool			
	6	23	**22150.0840**
	8	47	**22150.0841**
	10	46	**22150.0842**
	12	98	**22150.0843**
	16	145	**22150.0844**

2

Lateral Plungers • smooth, without seal, with female thread

EH 22150.

PRODUCT DESCRIPTION

To be used for positioning and applying pressure, e.g. during painting and sandblasting.

Material

Body
- Aluminium Al

Threaded washer
- Steel, blackened

Spring
- Stainless steel
- Steel, blackened
- Steel, zinc-plated by galvanization

Assembly

Formula for calculating the center distance for the mounting hole:
$l_0 = z/2 + w + x$,
l_0 = center distance,
y = workpiece height,
w = workpiece length,
x = stroke,
z = stop diameter

Calculation dimension x for workpieces:
$x = d_2/2 - s$
Installation by pressing in.

Characteristic

Light spring load = spring from stainless steel
Standard spring load = spring from steel, blackened
Heavy spring load = spring from steel, zinc-plated by galvanization

MORE INFORMATION

Notes

Individual set screws can be screwed in the plate with threaded hole.

Further products

Eccentric Mounting Bushings, for lateral plungers, smooth . . . . . → p. 154

DRAWING

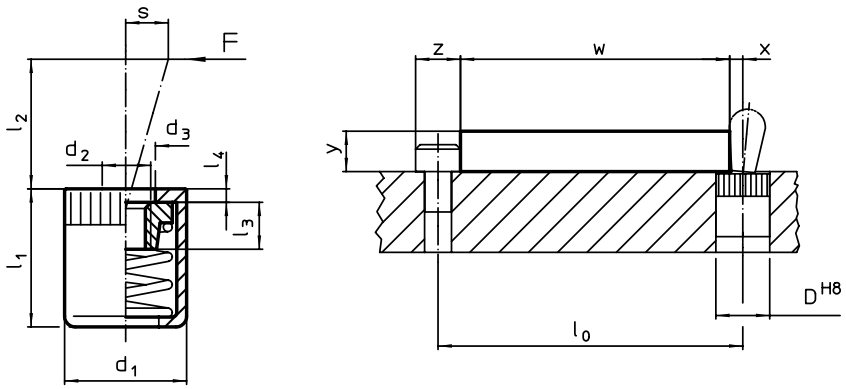

ORDER INFORMATION

Dimensions d_1 [mm]	Dimensions d_2 [mm]	Spring load F max.[1] ~ [N]	Dimensions d_3 [mm]	l_1 -2 [mm]	l_2 [mm]	l_3 [mm]	l_4 [mm]	Stroke s [mm]	Location hole D H8 [mm]	max. [°C]	[g]	Art. No.
light spring load												
10	**M4**	**20**	6,3	11	2,5	4,5	1,2	1,6	10	250	1,8	22150.1020
		40	6,3	11	7,5	4,5	1,2	2,0	10	250	1,9	22150.1025
16	**M6**	**100**	10,2	17	11,5	7,5	1,7	3,2	16	250	9,4	22150.1040
standard spring load												
10	**M4**	**50**	6,3	11	2,5	4,5	1,2	1,6	10	250	2,1	22150.1021
		75	6,3	11	7,5	4,5	1,2	2,0	10	250	2,1	22150.1026
16	**M6**	**150**	10,2	17	11,5	7,5	1,7	3,2	16	250	9,4	22150.1041
heavy spring load												
10	**M4**	**100**	6,3	11	2,5	4,5	1,2	1,6	10	250	2,3	22150.1022
		100	6,3	11	7,5	4,5	1,2	2,0	10	250	2,5	22150.1027
16	**M6**	**200**	10,2	17	11,5	7,5	1,7	3,2	16	250	9,3	22150.1042

[1] statistical average value

ACCESSORIES

	Dimensions d_1 [mm]	[g]	Art. No.
assembly tool			
	10	49	22150.0831
	16	105	22150.0833

Lateral Plungers • smooth, with seal, with female thread

EH 22150.

PRODUCT DESCRIPTION

To be used for positioning and applying pressure, e.g. during painting and sandblasting. Sealed against chips and dirt.

Material

Seal
- CR

Body
- Aluminium Al

Threaded washer
- Steel, blackened

Spring
- Stainless steel
- Steel, blackened
- Steel, zinc-plated by galvanization

Assembly

Formula for calculating the center distance for the mounting hole:
$l_0 = z/2 + w + x$,
l_0 = center distance,
y = workpiece height,
w = workpiece length,
x = stroke,
z = stop diameter
Calculation dimension x for workpieces:
$x = d_2/2 - s$
Installation by pressing in.

Characteristic

Light spring load = spring from stainless steel
Standard spring load = spring from steel, blackened
Heavy spring load = spring from steel, zinc-plated by galvanization

MORE INFORMATION

Notes

Individual set screws can be screwed in the plate with threaded hole.

Further products

Eccentric Mounting Bushings, for lateral plungers, smooth . . . . . → p. 154

DRAWING

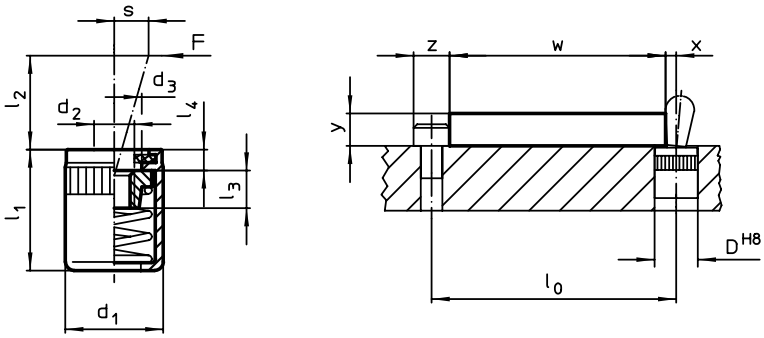

ORDER INFORMATION

Dimensions d_1 [mm]	Dimensions d_2 [mm]	Spring load F max.[1] ~ [N]	Dimensions d_3 [mm]	l_1 -2 [mm]	l_2 [mm]	l_3 [mm]	l_4 [mm]	Stroke s [mm]	Location hole D H8 [mm]	max. [°C]	[g]	Art. No.
light spring load												
10	M4	20	6,3	12	2,5	4,5	1,8	1,6	10	110	1,9	22150.1120
		40	6,3	12	7,5	4,5	1,8	2,0	10	110	2,0	22150.1125
16	M6	100	10,2	18	11,5	7,5	2,0	3,2	16	110	9,6	22150.1140
standard spring load												
10	M4	50	6,3	12	2,5	4,5	1,8	1,6	10	110	2,2	22150.1121
		75	6,3	12	7,5	4,5	1,8	2,0	10	110	2,2	22150.1126
16	M6	150	10,2	18	11,5	7,5	2,0	3,2	16	110	9,5	22150.1141
heavy spring load												
10	M4	100	6,3	12	2,5	4,5	1,8	1,6	10	110	2,3	22150.1122
					7,5	4,5	1,8	2,0	10	110	2,5	22150.1127
16	M6	200	10,2	18	11,5	7,5	2,0	3,2	16	110	10,0	22150.1142

[1] statistical average value

ACCESSORIES

	Dimensions d_1 [mm]	[g]	Art. No.
assembly tool			
	10	49	22150.0831
	16	105	22150.0833

2

Eccentric Mounting Bushings • for lateral plungers, smooth

EH 22150.

PRODUCT DESCRIPTION

The eccentric mounting bushing is used in conjunction with smooth lateral plungers EH 22150. for positioning or clamping workpieces with large tolerances.

Material

Body
- Steel, blackened

Assembly

Mounting and position determination by means of clamping with threaded pin.

DRAWING

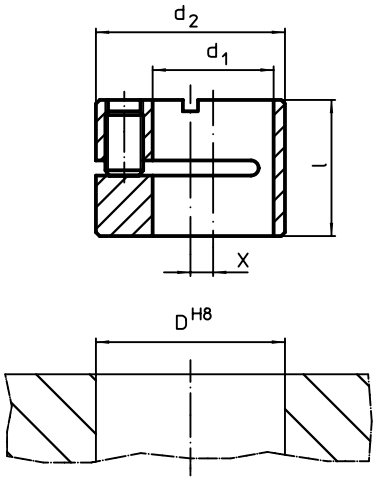

ORDER INFORMATION

Dimensions				Location hole		Art. No.
d_1 H7	d_2 h9	l	x	D H8		
[mm]				[mm]	[g]	
6	12	9,9	2	12	5,5	22150.0806
10	16	11,9	2	16	9,5	22150.0810
12	18	13,9	2	18	13,0	22150.0812
16	25	17,9	3	25	35,0	22150.0816

APPLICATION EXAMPLE

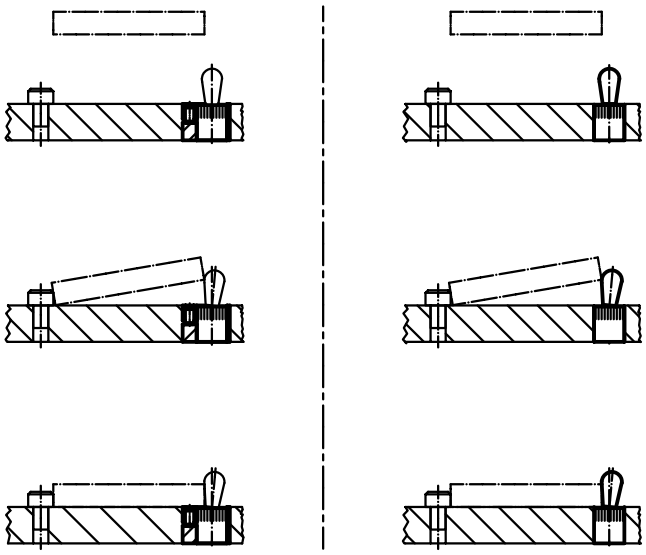

Lateral Plungers • with thread, without seal

EH 22150.

PRODUCT DESCRIPTION

To be used for positioning and applying pressure, e.g. during painting and sandblasting.

Material

Body
- Steel, zinc-plated by galvanization

Spring
- Stainless steel
- Steel, blackened
- Steel, zinc-plated by galvanization

Pin
- Steel, case-hardened, zinc-plated by galvanization
- Thermoplastic POM, white

Assembly

Lateral plungers are installed by screwing in by means of a mounting tool.
Formula for calculating the center distance for the mounting hole:
$l_0 = z/2 + w + x$,
l_0 = center distance,
y = workpiece height,
w = workpiece length,
x = coordinate dimension,
s = stroke,
z = stop diameter
Calculation dimension x:
y greater than or equal to $l_2 - d_2/2$, then
$x = d_2/2 - s$
or
y smaller than $l_2 - d_2/2$, then
$x = d_2/2 - s - [(l_2 - d_2/2 - y) * 0{,}123]$

Characteristic

Light spring load = spring from stainless steel
Standard spring load = spring from steel, blackened
Heavy spring load = spring from steel, zinc-plated by galvanization

DRAWING

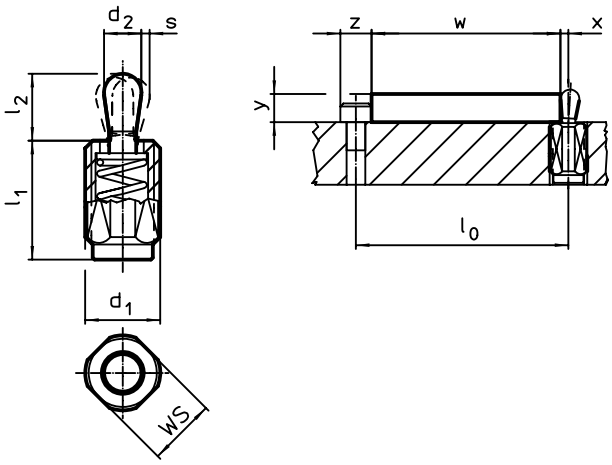

ORDER INFORMATION

Dimensions					Stroke	WS	max.		Art. No.
d_1	l_1 -2	Spring load F max.[1] ~	d_2	l_2	s				
[mm]		[N]	[mm]		[mm]	[mm]	[°C]	[g]	
pin: steel/light spring load									
M12	11,5	20	5	6,4	1,6	10	250	4,0	22150.0310
	19,0	20	5	6,4	1,6	10	250	5,9	22150.0314
	26,5	20	5	6,4	1,6	10	250	7,9	22150.0318
	11,5	40	6	10,4	2,0	10	250	4,8	22150.0330
	19,0	40	6	10,4	2,0	10	250	6,6	22150.0334
	26,5	40	6	10,4	2,0	10	250	8,6	22150.0338
M18 x 1,5	18,0	100	10	16,9	3,2	16	250	19,0	22150.0350
	31,5	100	10	16,9	3,2	16	250	28,0	22150.0354
	45,0	100	10	16,9	3,2	16	250	36,0	22150.0358

[1] statistical average value

2

Dimensions d_1 [mm]	l_1 -2 [mm]	Spring load F max.[1] ~ [N]	d_2 [mm]	l_2 [mm]	Stroke s [mm]	WS [mm]	max. [°C]	[g]	Art. No.
pin: steel/standard spring load									
M12	**11,5**	**50**	5	6,4	1,6	10	250	4,1	22150.0311
	19,0	**50**	5	6,4	1,6	10	250	6,4	22150.0315
	26,5	**50**	5	6,4	1,6	10	250	8,3	22150.0319
	11,5	**75**	6	10,4	2,0	10	250	4,9	22150.0331
	19,0	**75**	6	10,4	2,0	10	250	7,1	22150.0335
	26,5	**75**	6	10,4	2,0	10	250	9,6	22150.0339
M18 x 1,5	**18,0**	**150**	10	16,9	3,2	16	250	20,0	22150.0351
	31,5	**150**	10	16,9	3,2	16	250	29,0	22150.0355
	45,0	**150**	10	16,9	3,2	16	250	39,0	22150.0359
pin: steel/heavy spring load									
M12	**11,5**	**100**	5	6,4	1,6	10	250	4,4	22150.0312
	19,0	**100**	5	6,4	1,6	10	250	6,9	22150.0316
	26,5	**100**	5	6,4	1,6	10	250	9,0	22150.0320
	11,5	**100**	6	10,4	2,0	10	250	5,4	22150.0332
	19,0	**100**	6	10,4	2,0	10	250	7,7	22150.0336
	26,5	**100**	6	10,4	2,0	10	250	10,0	22150.0340
M18 x 1,5	**18,0**	**200**	10	16,9	3,2	16	250	21,0	22150.0352
	31,5	**200**	10	16,9	3,2	16	250	30,0	22150.0356
	45,0	**200**	10	16,9	3,2	16	250	40,0	22150.0360
pin: thermoplastic/light spring load									
M12	**11,5**	**20**	5	6,4	1,6	10	80	2,7	22150.0370
	19,0	**20**	5	6,4	1,6	10	80	4,6	22150.0375
	26,5	**20**	5	6,4	1,6	10	80	6,5	22150.0383
	11,5	**40**	6	10,4	2,0	10	80	3,1	22150.0373
	19,0	**40**	6	10,4	2,0	10	80	4,8	22150.0380
	26,5	**40**	6	10,4	2,0	10	80	6,8	22150.0385
M18 x 1,5	**18,0**	**100**	10	16,9	3,2	16	80	12,0	22150.0390
	31,5	**100**	10	16,9	3,2	16	80	20,0	22150.0393
	45,0	**100**	10	16,9	3,2	16	80	30,0	22150.0395

[1] statistical average value

ACCESSORIES

	Dimensions d_1 [mm]	[g]	Art. No.
assembly tool			
	M12	76	22150.0820
	M18 x 1,5	137	22150.0822

APPLICATION EXAMPLE

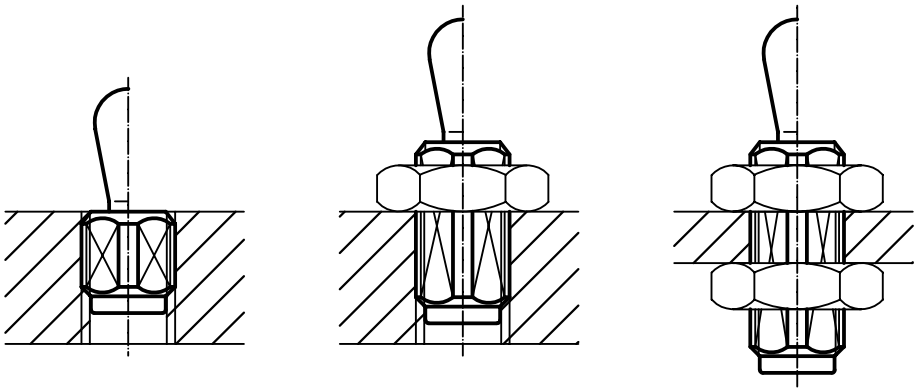

Lateral Plungers • with thread, with seal

EH 22150.

PRODUCT DESCRIPTION

To be used for positioning and applying pressure, e.g. during painting and sandblasting. Sealed against chips and dirt.

Material

Seal
- CR

Body
- Steel, zinc-plated by galvanization

Spring
- Stainless steel
- Steel, blackened
- Steel, zinc-plated by galvanization

Pin
- Steel, case-hardened, zinc-plated by galvanization
- Thermoplastic POM, white

Assembly

Lateral plungers are installed by screwing in by means of a mounting tool.
Formula for calculating the center distance for the mounting hole:

$l_0 = z/2 + w + x$,
l_0 = center distance,
y = workpiece height,
w = workpiece length,
x = coordinate dimension,
s = stroke,
z = stop diameter
Calculation dimension x:
y greater than or equal to $l_2 - d_2/2$, then
$x = d_2/2 - s$
or
y smaller than $l_2 - d_2/2$, then
$x = d_2/2 - s - [(l_2 - d_2/2 - y) * 0{,}123]$

Characteristic

Light spring load = spring from stainless steel
Standard spring load = spring from steel, blackened
Heavy spring load = spring from steel, zinc-plated by galvanization

DRAWING

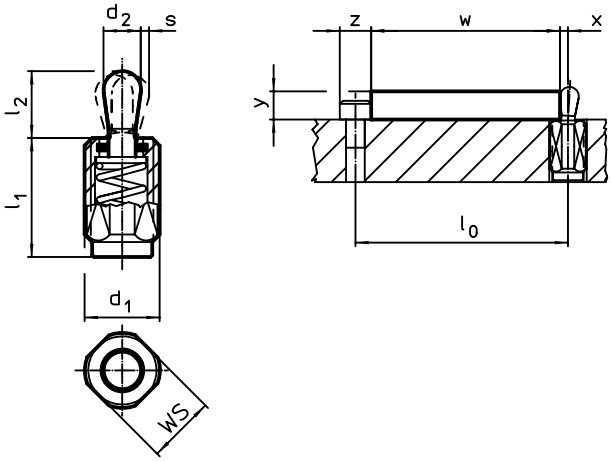

ORDER INFORMATION

Dimensions					Stroke	WS	max.		Art. No.
d_1	l_1 -2	Spring load F max.[1] ~	d_2	l_2	s				
[mm]		[N]	[mm]		[mm]	[mm]	[°C]	[g]	
pin: steel/light spring load									
M12	11,5	20	5	6	0,8	10	110	3,8	22150.0410
	19,0	20	5	6	0,8	10	110	5,6	22150.0414
	26,5	20	5	6	0,8	10	110	7,5	22150.0418
	11,5	40	6	10	1,0	10	110	4,7	22150.0430
	19,0	40	6	10	1,0	10	110	6,5	22150.0434
	26,5	40	6	10	1,0	10	110	8,3	22150.0438
M18 x 1,5	18,0	100	10	16	1,6	16	110	20,0	22150.0450
	31,5	100	10	16	1,6	16	110	28,0	22150.0454
	45,0	100	10	16	1,6	16	110	36,0	22150.0458

[1] statistical average value

→

2

Dimensions d_1 [mm]	l_1 -2 [mm]	Spring load F max.[1] ~ [N]	d_2 [mm]	l_2 [mm]	Stroke s [mm]	WS [mm]	max. [°C]	[g]	Art. No.
pin: steel/standard spring load									
M12	**11,5**	**50**	5	6	0,8	10	110	4,1	22150.0411
	19,0	**50**	5	6	0,8	10	110	6,3	22150.0415
	26,5	**50**	5	6	0,8	10	110	8,1	22150.0419
	11,5	**75**	6	10	1,0	10	110	4,8	22150.0431
	19,0	**75**	6	10	1,0	10	110	6,9	22150.0435
	26,5	**75**	6	10	1,0	10	110	8,9	22150.0439
M18 x 1,5	**18,0**	**150**	10	16	1,6	16	110	20,0	22150.0451
	31,5	**150**	10	16	1,6	16	110	29,0	22150.0455
	45,0	**150**	10	16	1,6	16	110	40,0	22150.0459
pin: steel/heavy spring load									
M12	**11,5**	**100**	5	6	0,8	10	110	4,2	22150.0412
	19,0	**100**	5	6	0,8	10	110	6,6	22150.0416
	26,5	**100**	5	6	0,8	10	110	8,7	22150.0420
	11,5	**100**	6	10	1,0	10	110	5,4	22150.0432
	19,0	**100**	6	10	1,0	10	110	7,6	22150.0436
	26,5	**100**	6	10	1,0	10	110	10,0	22150.0440
M18 x 1,5	**18,0**	**200**	10	16	1,6	16	110	20,0	22150.0452
	31,5	**200**	10	16	1,6	16	110	29,0	22150.0456
	45,0	**200**	10	16	1,6	16	110	38,0	22150.0460
pin: thermoplastic/light spring load									
M12	**11,5**	**20**	5	6	0,8	10	80	2,6	22150.0470
	19,0	**20**	5	6	0,8	10	80	4,4	22150.0475
	26,5	**20**	5	6	0,8	10	80	6,1	22150.0483
	11,5	**40**	6	10	1,0	10	80	2,7	22150.0473
	19,0	**40**	6	10	1,0	10	80	4,5	22150.0480
	26,5	**40**	6	10	1,0	10	80	6,2	22150.0485
M18 x 1,5	**18,0**	**100**	10	16	1,6	16	80	12,0	22150.0490
	31,5	**100**	10	16	1,6	16	80	21,0	22150.0493
	45,0	**100**	10	16	1,6	16	80	30,0	22150.0495

[1] statistical average value

ACCESSORIES

	Dimensions d_1 [mm]	[g]	Art. No.
assembly tool			
	M12	76	22150.0820
	M18 x 1,5	137	22150.0822

APPLICATION EXAMPLE

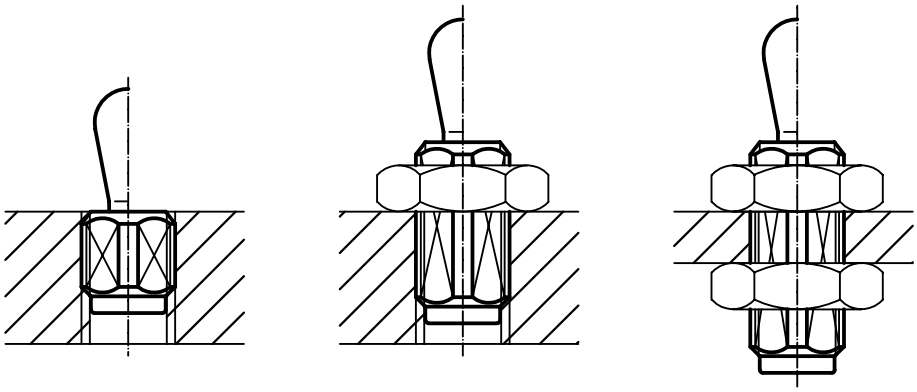

Lateral Plungers • with thread, without seal, with female thread

EH 22150.

PRODUCT DESCRIPTION

To be used for positioning and applying pressure, e.g. during painting and sandblasting.

Material

Body
- Steel, zinc-plated

Threaded washer
- Steel, blackened

Spring
- Stainless steel
- Steel, blackened
- Steel, zinc-plated by galvanization

Assembly

Formula for calculating the center distance for the mounting hole:
$l_0 = z/2 + w + x$,
l_0 = center distance,
y = workpiece height,
w = workpiece length,
x = stroke,
z = stop diameter
Calculation dimension x for workpieces:
$x = d_2/2 - s$
Lateral plungers are installed by screwing in by means of a mounting tool.

Characteristic

Light spring load = spring from stainless steel
Standard spring load = spring from steel, blackened
Heavy spring load = spring from steel, zinc-plated by galvanization

MORE INFORMATION

Notes

Individual set screws can be screwed in the plate with threaded hole.

DRAWING

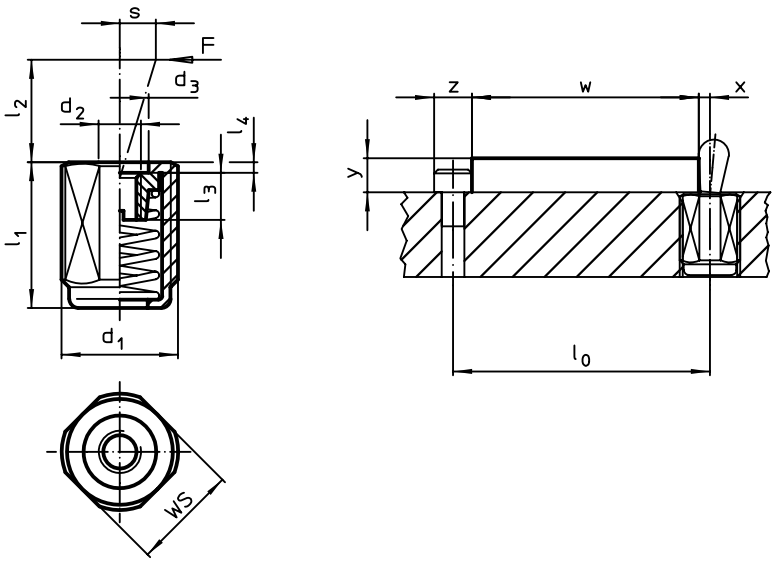

ORDER INFORMATION

Dimensions d_1 [mm]	l_1 -2 [mm]	Spring load F max.[1] ~ [N]	Dimensions d_2 [mm]	d_3 [mm]	l_2 [mm]	l_3 [mm]	l_4 [mm]	Stroke s [mm]	WS [mm]	max. [°C]	[g]	Art. No.
light spring load												
M12	**11,5**	**20**	M4	6,3	4,0	4,5	1,5	1,6	10	250	3,2	**22150.1310**
	19,0	**20**	M4	6,3	4,0	4,5	1,5	1,6	10	250	5,1	**22150.1314**
	26,5	**20**	M4	6,1	4,0	4,5	1,5	1,6	10	250	6,9	**22150.1318**
	11,5	**40**	M4	6,1	7,5	4,5	1,5	2,0	10	250	3,3	**22150.1330**
	19,0	**40**	M4	6,1	7,5	4,5	1,5	2,0	10	250	5,2	**22150.1334**
	26,5	**40**	M4	6,1	7,5	4,5	1,5	2,0	10	250	6,9	**22150.1338**
M18 x 1,5	**18,0**	**100**	M6	10,5	11,5	7,5	1,5	3,2	16	250	14,6	**22150.1350**
	31,5	**100**	M6	10,5	11,5	7,5	1,5	3,2	16	250	23,1	**22150.1354**
	45,0	**100**	M6	10,5	11,5	7,5	1,5	3,2	16	250	31,8	**22150.1358**

[1] statistical average value

→

2

Dimensions d_1	l_1 -2 [mm]	Spring load F max.[1] ~ [N]	Dimensions d_2	d_3	l_2	l_3	l_4 [mm]	Stroke s [mm]	WS [mm]	max. [°C]	[g]	Art. No.
standard spring load												
M12	**11,5**	**50**	M4	6,3	4,0	4,5	1,5	1,6	10	250	3,5	**22150.1311**
	19,0	**50**	M4	6,1	4,0	4,5	1,5	1,6	10	250	5,6	**22150.1315**
	26,5	**50**	M4	6,1	4,0	4,5	1,5	1,6	10	250	7,6	**22150.1319**
	11,5	**75**	M4	6,1	7,5	4,5	1,5	2,0	10	250	3,5	**22150.1331**
	19,0	**75**	M4	6,1	7,5	4,5	1,5	2,0	10	250	5,6	**22150.1335**
	26,5	**75**	M4	6,1	7,5	4,5	1,5	2,0	10	250	7,7	**22150.1339**
M18 x 1,5	**18,0**	**150**	M6	10,5	11,5	7,5	1,5	3,2	16	250	14,5	**22150.1351**
	31,5	**150**	M6	10,5	11,5	7,5	1,5	3,2	16	250	23,1	**22150.1355**
	45,0	**150**	M6	10,5	11,5	7,5	1,5	3,2	16	250	32,1	**22150.1359**
heavy spring load												
M12	**11,5**	**100**	M4	6,3	4,0	4,5	1,5	1,6	10	250	3,7	**22150.1312**
	19,0	**100**	M4	6,1	4,0	4,5	1,5	1,6	10	250	6,0	**22150.1316**
	26,5	**100**	M4	6,1	4,0	4,5	1,5	1,6	10	250	8,2	**22150.1320**
	11,5	**100**	M4	6,1	7,5	4,5	1,5	2,0	10	250	3,9	**22150.1332**
	19,0	**100**	M4	6,1	7,5	4,5	1,5	2,0	10	250	6,5	**22150.1336**
	26,5	**100**	M4	6,1	7,5	4,5	1,5	2,0	10	250	8,6	**22150.1340**
M18 x 1,5	**18,0**	**200**	M6	10,5	11,5	7,5	1,5	3,2	16	250	14,4	**22150.1352**
	31,5	**200**	M6	10,5	11,5	7,5	1,5	3,2	16	250	22,9	**22150.1356**
	45,0	**200**	M6	10,5	11,5	7,5	1,5	3,2	16	250	31,9	**22150.1360**

[1] statistical average value

ACCESSORIES

	Dimensions d_1 [mm]	[g]	Art. No.
assembly tool			
	M12	76	**22150.0820**
	M18 x 1,5	137	**22150.0822**

APPLICATION EXAMPLE

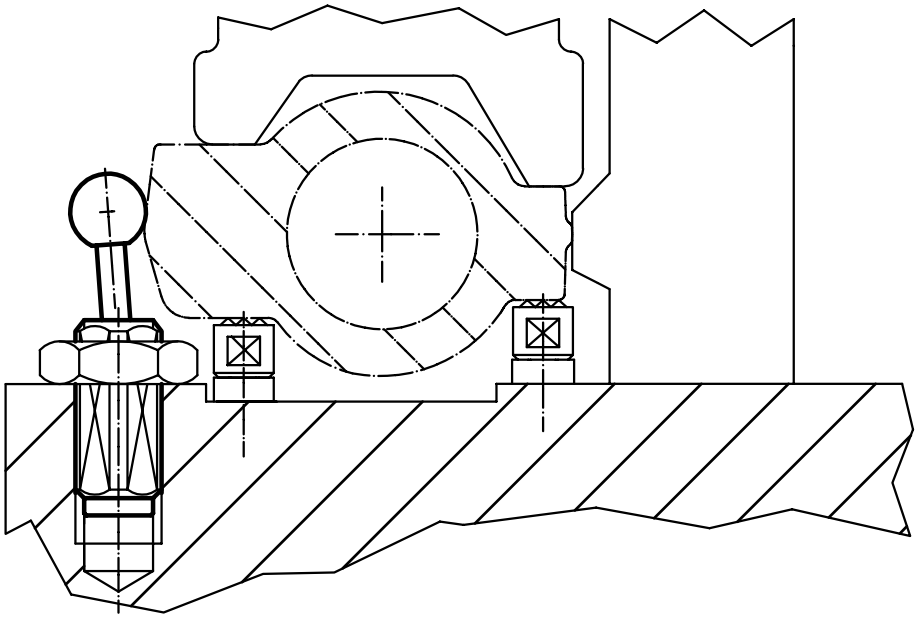

Lateral Plungers • with thread, with seal, with female thread

EH 22150.

PRODUCT DESCRIPTION

To be used for positioning and applying pressure, e.g. during painting and sandblasting. Sealed against chips and dirt.

Material

Seal
- CR

Body
- Steel, zinc-plated

Threaded washer
- Steel, blackened

Spring
- Stainless steel
- Steel, blackened
- Steel, zinc-plated by galvanization

Assembly

Formula for calculating the center distance for the mounting hole:
l_0 = z/2 + w + x,
l_0 = center distance,
y = workpiece height,
w = workpiece length,
x = stroke,
z = stop diameter
Calculation dimension x for workpieces:
x = d_2/2 - s
Lateral plungers are installed by screwing in by means of a mounting tool.

Characteristic

Light spring load = spring from stainless steel
Standard spring load = spring from steel, blackened
Heavy spring load = spring from steel, zinc-plated by galvanization

MORE INFORMATION

Notes

Individual set screws can be screwed in the plate with threaded hole.

DRAWING

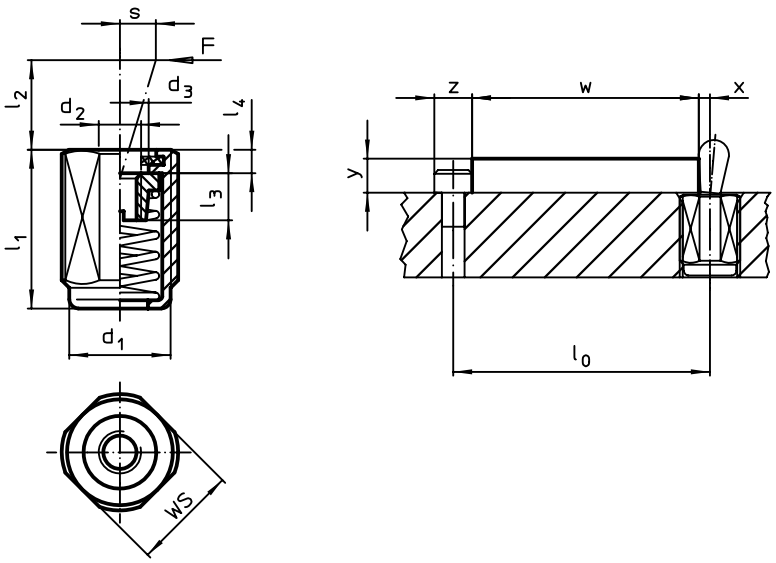

ORDER INFORMATION

Dimensions d_1 [mm]	Dimensions l_1 -2 [mm]	Spring load F max.[1] ~ [N]	Dimensions d_2 [mm]	Dimensions d_3 [mm]	Dimensions l_2 [mm]	Dimensions l_3 [mm]	Dimensions l_4 [mm]	Stroke s [mm]	WS [mm]	max. [°C]	[g]	Art. No.
light spring load												
M12	**11,5**	**20**	M4	6,1	4,0	4,5	2,0	1,6	10	110	3,0	**22150.1410**
	19,0	**20**	M4	6,1	4,0	4,5	2,0	1,6	10	110	4,9	**22150.1414**
	26,5	**20**	M4	6,1	4,0	4,5	2,0	1,6	10	110	6,7	**22150.1418**
	11,5	**40**	M4	6,1	7,5	4,5	2,0	2,0	10	110	3,1	**22150.1430**
	19,0	**40**	M4	6,1	7,5	4,5	2,0	2,0	10	110	5,1	**22150.1434**
	26,5	**40**	M4	6,1	7,5	4,5	2,0	2,0	10	110	6,8	**22150.1438**
M18 x 1,5	**18,0**	**100**	M6	10,1	11,5	7,5	2,3	3,2	16	110	14,6	**22150.1450**
	31,5	**100**	M6	10,1	11,5	7,5	2,3	3,2	16	110	23,1	**22150.1454**
	45,0	**100**	M6	10,1	11,5	7,5	2,3	3,2	16	110	31,9	**22150.1458**

[1] statistical average value

→

2

Dimensions d_1 [mm]	l_1 -2	Spring load F max.[1] ~ [N]	Dimensions d_2 [mm]	d_3	l_2	l_3	l_4	Stroke s [mm]	WS [mm]	max. [°C]	[g]	Art. No.
standard spring load												
M12	**11,5**	**50**	M4	6,1	4,0	4,5	2,0	1,6	10	110	3,3	**22150.1411**
	19,0	**50**	M4	6,1	4,0	4,5	2,0	1,6	10	110	5,4	**22150.1415**
	26,5	**50**	M4	6,1	4,0	4,5	2,0	1,6	10	110	7,3	**22150.1419**
	11,5	**75**	M4	6,1	7,5	4,5	2,0	2,0	10	110	3,3	**22150.1431**
	19,0	**75**	M4	6,1	7,5	4,5	2,0	2,0	10	110	5,5	**22150.1435**
	26,5	**75**	M4	6,1	7,5	4,5	2,0	2,0	10	110	7,4	**22150.1439**
M18 x 1,5	**18,0**	**150**	M6	10,1	11,5	7,5	2,3	3,2	16	110	14,7	**22150.1451**
	31,5	**150**	M6	10,1	11,5	7,5	2,3	3,2	16	110	23,1	**22150.1455**
	45,0	**150**	M6	10,1	11,5	7,5	2,3	3,2	16	110	32,1	**22150.1459**
heavy spring load												
M12	**11,5**	**100**	M4	6,1	4,0	4,5	2,0	1,6	10	110	3,5	**22150.1412**
	19,0	**100**	M4	6,1	4,0	4,5	2,0	1,6	10	110	5,8	**22150.1416**
	26,5	**100**	M4	6,1	4,0	4,5	2,0	1,6	10	110	8,0	**22150.1420**
	11,5	**100**	M4	6,1	7,5	4,5	2,0	2,0	10	110	3,6	**22150.1432**
	19,0	**100**	M4	6,1	7,5	4,5	2,0	2,0	10	110	6,2	**22150.1436**
	26,5	**100**	M4	6,1	7,5	4,5	2,0	2,0	10	110	8,7	**22150.1440**
M18 x 1,5	**18,0**	**200**	M6	10,1	11,5	7,5	2,3	3,2	16	110	14,6	**22150.1452**
	31,5	**200**	M6	10,1	11,5	7,5	2,3	3,2	16	110	23,0	**22150.1456**
	45,0	**200**	M6	10,1	11,5	7,5	2,3	3,2	16	110	32,0	**22150.1460**

[1] statistical average value

ACCESSORIES

	Dimensions d_1 [mm]	[g]	Art. No.
assembly tool			
	M12	76	**22150.0820**
	M18 x 1,5	137	**22150.0822**

APPLICATION EXAMPLE

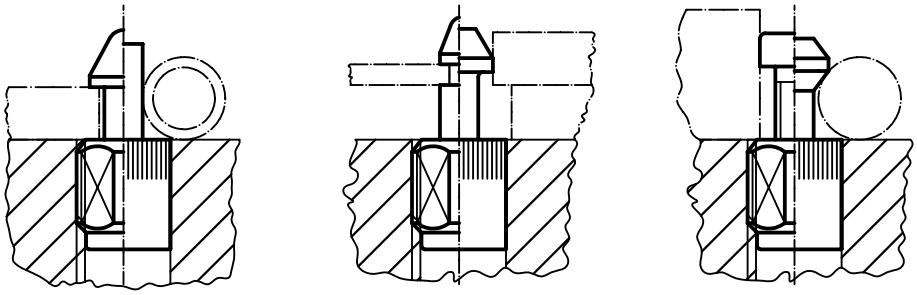

Lateral Spring Plungers • with spring steel sheet

EH 22160.

PRODUCT DESCRIPTION

The lateral spring plunger with spring steel sheet guarantees a simple and secure positioning of workpieces or components at stops or fixture plates, e.g. in board mounting or before the clamping process in the jig and fixture construction.
The double-sided version allows for serial clamping.
Below h_1 is resulting a down hold effect.

Material

Spring element
- Stainless steel

Body
- Steel, black

DRAWING

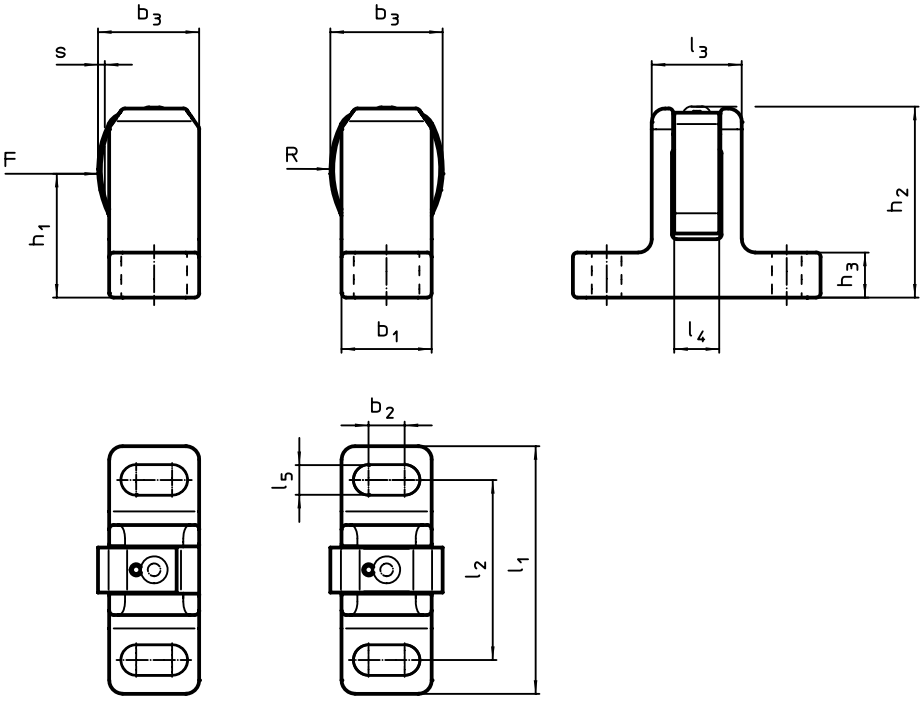

picture 1 picture 2

ORDER INFORMATION

Dimensions												Stroke s	For screw	Spring load F max.[1] ~	max.		Art. No.
l_1 ±1	l_2	l_3	l_4	l_5	b_1 ±0,5	b_2	b_3 ~	h_1	h_2 ±1	h_3	R						
[mm]												[mm]	[mm]	[N]	[°C]	[g]	
one-sided – picture 1																	
55	40	20	10	6,6	20	8	22,5	28,5	43,0	10	22,5	1,5	M 6	55	250	130	22160.0006
72	50	23	12	13,5	25	6	29,0	40,5	61,5	15	32,8	1,5	M12	170	250	255	22160.0012
double-sided – picture 2																	
55	40	20	10	6,6	20	8	25,0	28,5	42,5	10	22,5	1,5	M 6	55	250	135	22160.0206
72	50	23	12	13,5	25	6	33,5	40,5	61,5	15	32,8	1,5	M12	170	250	260	22160.0212

[1] statistical average value

APPLICATION EXAMPLE

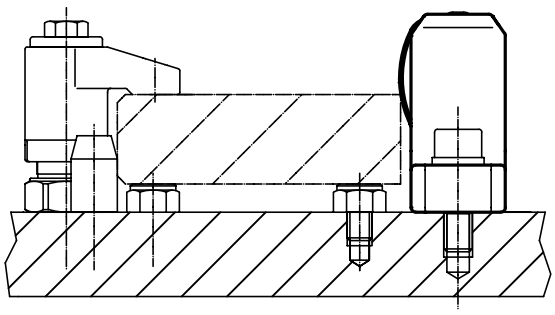

2

LATERAL PLUNGERS

INCH MODELS

Our premium-grade lateral plungers are also available as imperial versions. These models are available as press-in versions.

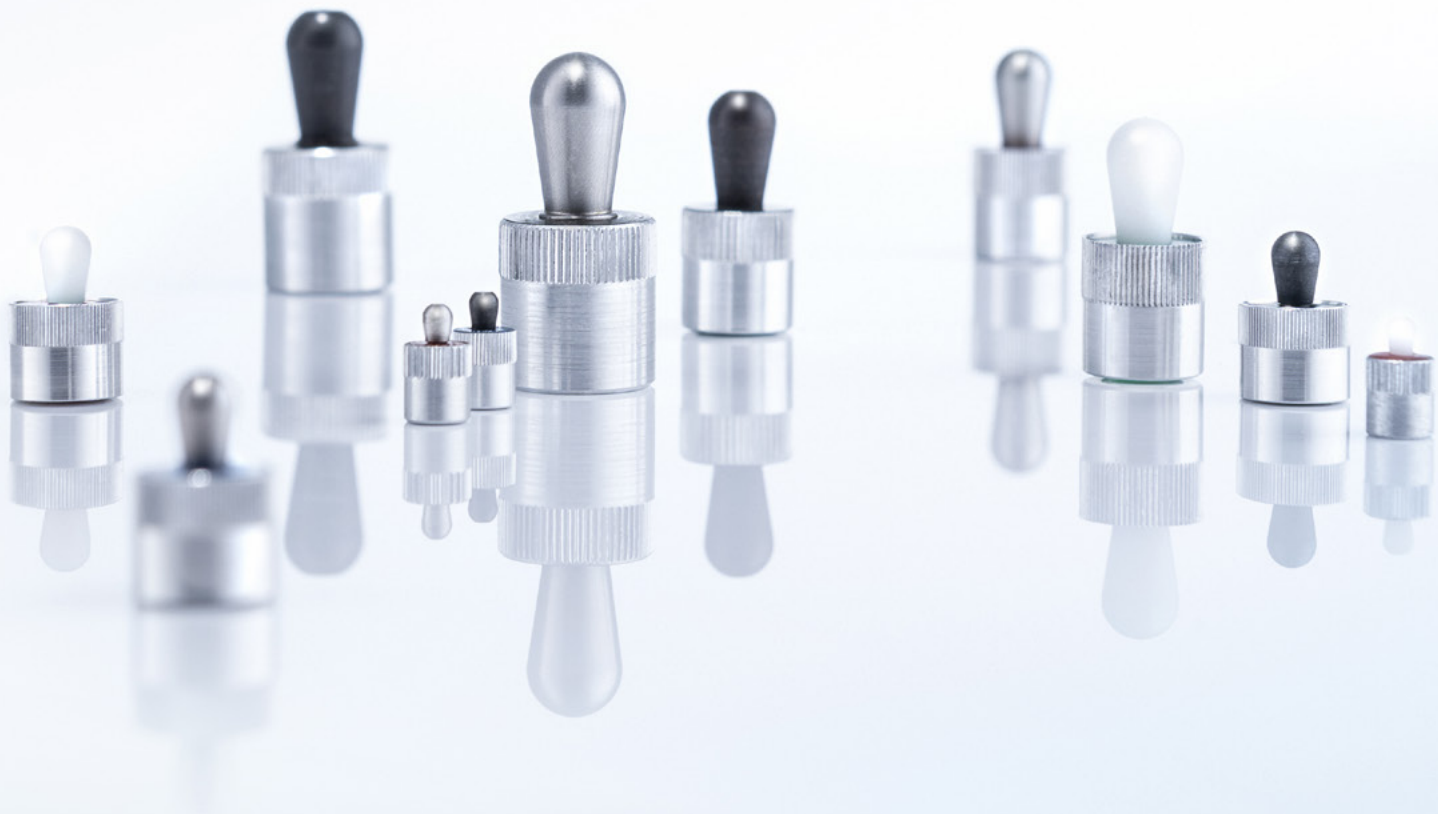

Lateral Plungers • smooth, without seal - INCH

EH 2B150.

PRODUCT DESCRIPTION

To be used for positioning and applying pressure, e.g. during painting and sandblasting.

Material

Body
- Aluminium Al

Spring
- Stainless steel
- Steel, blackened
- Steel, zinc-plated by galvanization

Pin
- Steel, case-hardened, zinc-plated by galvanization
- Thermoplastic POM, white

Assembly

Installation by pressing in.
Formula for calculating the center distance for the mounting hole:
l_0 = z/2 + w + x,
l_0 = center distance,
y = workpiece height,
w = workpiece length,
x = coordinate dimension,
s = stroke,
z = stop diameter
Calculation dimension x:
y greater than or equal to l_2 - d_2/2, then
x = d_2/2 - s
or
y smaller than l_2 - d_2/2, then
x = d_2/2 - s - [(l_2 - d_2/2 - y) * 0,123]

Characteristic

Light spring load = spring from stainless steel
Standard spring load = spring from steel, blackened
Heavy spring load = spring from steel, zinc-plated by galvanization

MORE INFORMATION

Further products

Eccentric Mounting Bushings, for lateral plungers, smooth - INCH . . . . . → p. 173

DRAWING

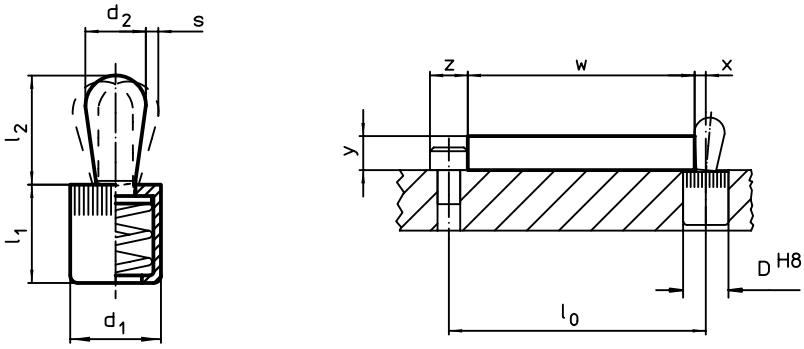

ORDER INFORMATION

Dimensions d_1 [inch]	Dimensions d_2 [inch]	Spring load F max.[1] ~ [lb]	Dimensions l_1 -0,08 [inch]	Dimensions l_2 [inch]	Stroke s [inch]	Location hole D H8 [inch]	max. [°F]	[oz]	Art. No.
pin: steel/light spring load									
1/4	**0,118**	**2,2**	0,275	0,157	0,04	1/4	482	0,023	**2B150.0010**
7/16	**0,197**	**4,5**	0,433	0,263	0,06	7/16	482	0,107	**2B150.0020**
	0,236	**9,0**	0,433	0,421	0,08	7/16	482	0,139	**2B150.0025**
1/2	**0,315**	**11,2**	0,525	0,535	0,09	1/2	482	0,260	**2B150.0030**
5/8	**0,393**	**22,5**	0,669	0,657	0,12	5/8	482	0,535	**2B150.0040**
pin: steel/standard spring load									
1/4	**0,118**	**4,5**	0,275	0,157	0,04	1/4	482	0,023	**2B150.0011**
7/16	**0,197**	**11,2**	0,433	0,263	0,06	7/16	482	0,117	**2B150.0021**
	0,236	**16,9**	0,433	0,421	0,08	7/16	482	0,142	**2B150.0026**
1/2	**0,315**	**22,5**	0,525	0,535	0,09	1/2	482	0,282	**2B150.0031**
5/8	**0,393**	**34,0**	0,669	0,657	0,12	5/8	482	0,535	**2B150.0041**
pin: steel/heavy spring load									
1/4	**0,118**	**9,0**	0,275	0,157	0,04	1/4	482	0,025	**2B150.0012**
7/16	**0,197**	**21,5**	0,433	0,263	0,06	7/16	482	0,124	**2B150.0022**
	0,236	**22,5**	0,433	0,421	0,08	7/16	482	0,157	**2B150.0027**
1/2	**0,315**	**34,0**	0,525	0,535	0,09	1/2	482	0,296	**2B150.0032**
5/8	**0,393**	**45,0**	0,669	0,657	0,12	5/8	482	0,571	**2B150.0042**

[1] statistical average value →

2

Dimensions d_1 [inch]	Dimensions d_2 [inch]	Spring load F max.[1) ~ [lb]	Dimensions l_1 -0,08 [inch]	Dimensions l_2 [inch]	Stroke s [inch]	Location hole D H8 [inch]	max. [°F]	[oz]	Art. No.
pin: thermoplastic/light spring load									
1/4	**0,118**	**2,2**	0,275	0,157	0,04	1/4	176	0,014	**2B150.0050**
7/16	**0,197**	**4,5**	0,433	0,263	0,06	7/16	176	0,064	**2B150.0060**
	0,236	**9,0**	0,433	0,421	0,08	7/16	176	0,071	**2B150.0065**
1/2	**0,315**	**11,2**	0,525	0,547	0,09	1/2	176	0,117	**2B150.0070**
5/8	**0,393**	**22,5**	0,669	0,657	0,12	5/8	176	0,249	**2B150.0080**

[1) statistical average value

ACCESSORIES

	Dimensions d_1 [inch]	[oz]	Art. No.
assembly tool			
	1/4	0,678	**22150.0830**
	7/16	1,749	**22150.0831**
	1/2	2,321	**22150.0832**
	5/8	3,749	**22150.0833**

APPLICATION EXAMPLE

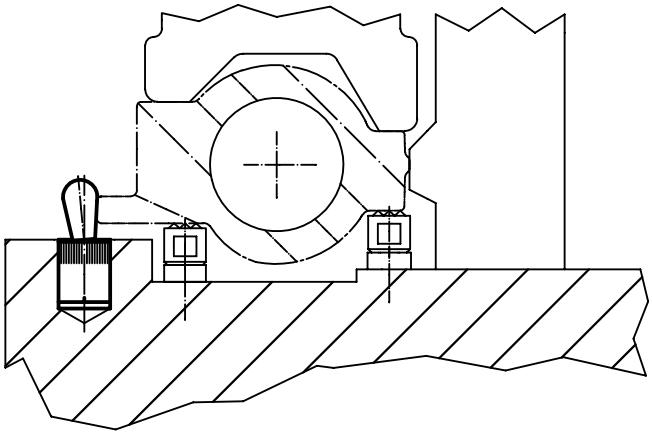

Lateral Plungers • smooth, with seal - INCH

EH 2B150.

PRODUCT DESCRIPTION

To be used for positioning and applying pressure, e.g. during painting and sandblasting. Sealed against chips and dirt.

Material

Seal
- CR

Body
- Aluminium Al

Spring
- Stainless steel
- Steel, blackened
- Steel, zinc-plated by galvanization

Pin
- Steel, case-hardened, zinc-plated by galvanization
- Thermoplastic POM, white

Assembly

Installation by pressing in.
Formula for calculating the center distance for the mounting hole:
$l_0 = z/2 + w + x$,
l_0 = center distance,
y = workpiece height,
w = workpiece length,
x = coordinate dimension,
s = stroke,
z = stop diameter
Calculation dimension x:
y greater than or equal to $l_2 - d_2/2$, then
$x = d_2/2 - s$
or
y smaller than $l_2 - d_2/2$, then
$x = d_2/2 - s - [(l_2 - d_2/2 - y) * 0{,}123]$

Characteristic

Light spring load = spring from stainless steel
Standard spring load = spring from steel, blackened
Heavy spring load = spring from steel, zinc-plated by galvanization

MORE INFORMATION

Further products

Eccentric Mounting Bushings, for lateral plungers, smooth - INCH . . . . . → p. 173

DRAWING

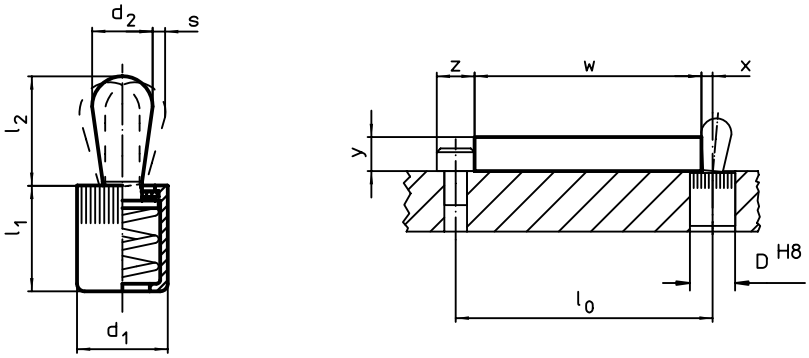

ORDER INFORMATION

Dimensions d_1 [inch]	Dimensions d_2 [inch]	Spring load F max.[1] ~ [lb]	Dimensions l_1 -0,08 [inch]	Dimensions l_2 [inch]	Stroke s [inch]	Location hole D H8 [inch]	max. [°F]	[oz]	Art. No.
pin: steel/light spring load									
1/4	**0,118**	**2,2**	0,275	0,157	0,04	1/4	230	0,024	**2B150.0110**
7/16	**0,197**	**4,5**	0,430	0,236	0,06	7/16	230	0,111	**2B150.0120**
	0,236	**9,0**	0,430	0,393	0,08	7/16	230	0,139	**2B150.0125**
1/2	**0,315**	**11,2**	0,551	0,511	0,09	1/2	230	0,261	**2B150.0130**
5/8	**0,393**	**22,5**	0,708	0,646	0,12	5/8	230	0,571	**2B150.0140**
pin: steel/standard spring load									
1/4	**0,118**	**4,5**	0,275	0,157	0,04	1/4	230	0,024	**2B150.0111**
7/16	**0,197**	**11,2**	0,430	0,236	0,06	7/16	230	0,117	**2B150.0121**
	0,236	**16,9**	0,430	0,393	0,08	7/16	230	0,149	**2B150.0126**
1/2	**0,315**	**22,5**	0,551	0,511	0,09	1/2	230	0,278	**2B150.0131**
5/8	**0,393**	**34,0**	0,708	0,646	0,12	5/8	230	0,535	**2B150.0141**
pin: steel/heavy spring load									
1/4	**0,118**	**9,0**	0,275	0,157	0,04	1/4	230	0,026	**2B150.0112**
7/16	**0,197**	**21,5**	0,430	0,236	0,06	7/16	230	0,124	**2B150.0122**
	0,236	**22,5**	0,430	0,393	0,08	7/16	230	0,161	**2B150.0127**
1/2	**0,315**	**34,0**	0,551	0,511	0,09	1/2	230	0,292	**2B150.0132**
5/8	**0,393**	**45,0**	0,708	0,646	0,12	5/8	230	0,535	**2B150.0142**

[1] statistical average value →

2

Dimensions d_1 [inch]	Dimensions d_2 [inch]	Spring load F max.[1) ~ [lb]	Dimensions l_1 -0,08 [inch]	Dimensions l_2 [inch]	Stroke s [inch]	Location hole D H8 [inch]	max. [°F]	[oz]	Art. No.
pin: thermoplastic/light spring load									
1/4	**0,118**	**2,2**	0,275	0,157	0,04	1/4	176	0,014	**2B150.0150**
7/16	**0,197**	**4,5**	0,430	0,236	0,06	7/16	176	0,064	**2B150.0160**
	0,236	**9,0**	0,393	0,472	0,08	7/16	176	0,074	**2B150.0165**
1/2	**0,315**	**11,2**	0,551	0,531	0,09	1/2	176	0,114	**2B150.0170**
5/8	**0,393**	**22,5**	0,708	0,646	0,12	5/8	176	0,299	**2B150.0180**

1) statistical average value

ACCESSORIES

	Dimensions d_1 [inch]	[oz]	Art. No.
assembly tool			
	1/4	0,678	**22150.0830**
	7/16	1,749	**22150.0831**
	1/2	2,321	**22150.0832**
	5/8	3,749	**22150.0833**

APPLICATION EXAMPLE

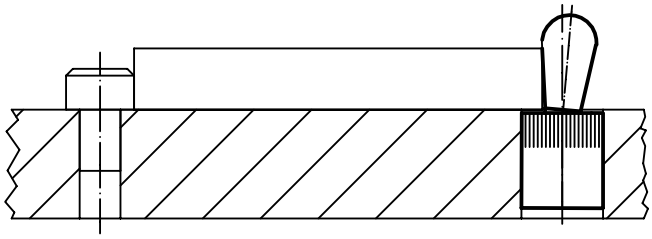

Lateral Plungers • with plastic spring and pin - INCH

EH 2B150.

PRODUCT DESCRIPTION

To be used for positioning and applying pressure, e.g. during painting and sandblasting.

Material

Body
- Aluminium Al

Spring
- Plastic

Pin
- Steel, case-hardened, blackened
- Stainless steel
- Thermoplastic POM, white

Assembly

Installation by pressing in.
Formula for calculating the center distance for the mounting hole:
$l_0 = z/2 + w + x$,
l_0 = center distance,
y = workpiece height,
w = workpiece length,
x = coordinate dimension,
s = stroke,
z = stop diameter
Calculation dimension x:
y greater than or equal to $l_2 - d_2/2$, then
$x = d_2/2 - s$
or
y smaller than $l_2 - d_2/2$, then
$x = d_2/2 - s - [(l_2 - d_2/2 - y) * 0{,}123]$

Characteristic

Light spring load = blue spring
Standard spring load = red spring
Heavy spring load = green spring

DRAWING

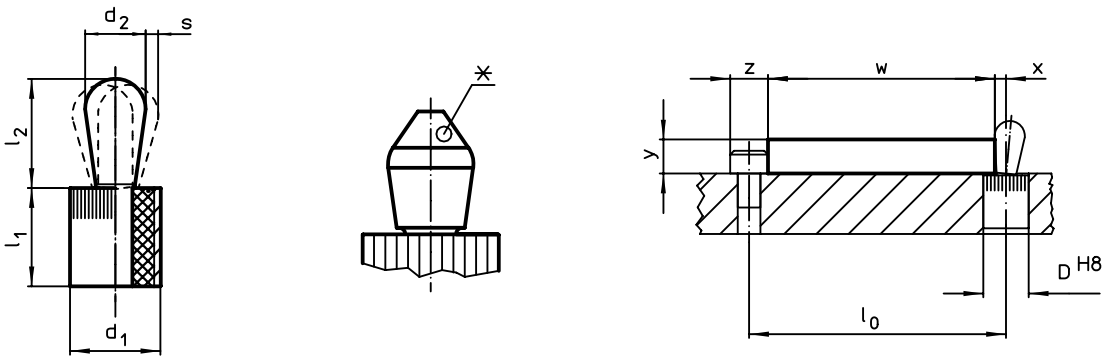

*some sizes (see chart) have a deviating pin shape

ORDER INFORMATION

Dimensions d_1 [inch]	Dimensions d_2 [inch]	Spring load F max.[1] ~ [lb]	Dimensions l_1 -0,03 [inch]	Dimensions l_2 ±0,02 [inch]	Stroke s [inch]	Location hole D H8 [inch]	max. [°F]	[oz]	Art. No.
pin: steel/light spring load									
1/4	**0,118**	**2,2**	0,295	0,145	0,016	0,250	212	0,021	**2B150.0210**[2]
7/16	**0,197**	**6,7**	0,374	0,287	0,032	0,438	212	0,096	**2B150.0220**
	0,236	**4,4**	0,374	0,406	0,040	0,438	212	0,121	**2B150.0225**
pin: steel/standard spring load									
1/4	**0,118**	**4,4**	0,295	0,145	0,016	0,250	212	0,021	**2B150.0211**[2]
7/16	**0,197**	**13,5**	0,374	0,287	0,032	0,438	212	0,092	**2B150.0221**
	0,236	**6,7**	0,374	0,406	0,040	0,438	212	0,121	**2B150.0226**
1/2	**0,315**	**11,1**	0,553	0,515	0,048	0,500	212	0,264	**2B150.0230**
5/8	**0,394**	**18,0**	0,675	0,678	0,062	0,625	212	0,535	**2B150.0240**
pin: steel/heavy spring load									
7/16	**0,197**	**20,0**	0,374	0,287	0,032	0,438	212	0,096	**2B150.0222**
	0,236	**13,5**	0,374	0,406	0,040	0,438	212	0,124	**2B150.0227**
1/2	**0,315**	**22,2**	0,553	0,515	0,048	0,500	212	0,267	**2B150.0231**
5/8	**0,394**	**36,0**	0,675	0,678	0,062	0,625	212	0,535	**2B150.0241**

[1] statistical average value
[2] deviating pin shape (see drawing)

→

Dimensions d_1 [inch]	Dimensions d_2 [inch]	Spring load F max.[1] ~ [lb]	Dimensions l_1 -0,03 [inch]	Dimensions l_2 ±0,02 [inch]	Stroke s [inch]	Location hole D H8 [inch]	max. [°F]	[oz]	Art. No.
pin: stainless steel/light spring load									
1/4	**0,118**	**2,2**	0,295	0,145	0,016	0,250	212	0,021	**2B150.0310**[2]
7/16	**0,197**	**6,7**	0,374	0,287	0,032	0,438	212	0,096	**2B150.0320**
	0,236	**4,4**	0,374	0,406	0,040	0,438	212	0,124	**2B150.0325**
pin: stainless steel/standard spring load									
1/4	**0,118**	**4,4**	0,295	0,145	0,016	0,250	212	0,021	**2B150.0311**[2]
7/16	**0,197**	**13,5**	0,374	0,287	0,032	0,438	212	0,092	**2B150.0321**
	0,236	**6,7**	0,374	0,406	0,040	0,438	212	0,124	**2B150.0326**
1/2	**0,315**	**11,1**	0,553	0,515	0,048	0,500	212	0,246	**2B150.0330**
5/8	**0,394**	**18,0**	0,675	0,678	0,062	0,625	212	0,571	**2B150.0340**
pin: stainless steel/heavy spring load									
7/16	**0,197**	**20,0**	0,374	0,287	0,032	0,438	212	0,092	**2B150.0322**
	0,236	**13,5**	0,374	0,406	0,040	0,438	212	0,124	**2B150.0327**
1/2	**0,315**	**22,2**	0,553	0,515	0,048	0,500	212	0,264	**2B150.0331**
5/8	**0,394**	**36,0**	0,675	0,678	0,062	0,625	212	0,571	**2B150.0341**
pin: thermoplastic/light spring load									
1/4	**0,118**	**2,2**	0,295	0,145	0,016	0,250	176	0,012	**2B150.0410**[2]
7/16	**0,197**	**6,7**	0,374	0,287	0,032	0,438	176	0,053	**2B150.0420**
	0,236	**4,4**	0,374	0,406	0,040	0,438	176	0,061	**2B150.0425**
pin: thermoplastic/standard spring load									
1/4	**0,118**	**4,4**	0,295	0,145	0,016	0,250	176	0,012	**2B150.0411**[2]
7/16	**0,197**	**13,5**	0,374	0,287	0,032	0,438	176	0,053	**2B150.0421**
	0,236	**6,7**	0,374	0,406	0,040	0,438	176	0,057	**2B150.0426**
1/2	**0,315**	**11,1**	0,553	0,515	0,048	0,500	176	0,107	**2B150.0430**
5/8	**0,394**	**18,0**	0,675	0,678	0,062	0,625	176	0,199	**2B150.0440**
pin: thermoplastic/heavy spring load									
7/16	**0,197**	**20,0**	0,374	0,287	0,032	0,438	176	0,053	**2B150.0422**
	0,236	**13,5**	0,374	0,406	0,040	0,438	176	0,061	**2B150.0427**
1/2	**0,315**	**22,2**	0,553	0,515	0,048	0,500	176	0,107	**2B150.0431**
5/8	**0,394**	**36,0**	0,675	0,678	0,062	0,625	176	0,203	**2B150.0441**

[1] statistical average value
[2] deviating pin shape (see drawing)

ACCESSORIES

	Dimensions d_1 [inch]	[oz]	Art. No.
assembly tool			
	1/4	0,678	**22150.0830**
	7/16	1,749	**22150.0831**
	1/2	2,321	**22150.0832**
	5/8	3,749	**22150.0833**

Lateral Plungers • smooth, without seal, with female thread - INCH

EH 2B150.

PRODUCT DESCRIPTION

To be used for positioning and applying pressure, e.g. during painting and sandblasting.

Material

Body
- Aluminium Al

Threaded washer
- Steel, blackened

Spring
- Stainless steel
- Steel, blackened
- Steel, zinc-plated by galvanization

Assembly

Formula for calculating the center distance for the mounting hole:
$l_0 = z/2 + w + x$,
l_0 = center distance,
y = workpiece height,
w = workpiece length,
x = stroke,
z = stop diameter

Calculation dimension x for workpieces:
$x = d_2/2 - s$
Installation by pressing in.

Characteristic

Light spring load = spring from stainless steel
Standard spring load = spring from steel, blackened
Heavy spring load = spring from steel, zinc-plated by galvanization

MORE INFORMATION

Notes

Individual set screws can be screwed in the plate with threaded hole.

Further products

Eccentric Mounting Bushings, for lateral plungers, smooth - INCH . . . . . → p. 173

DRAWING

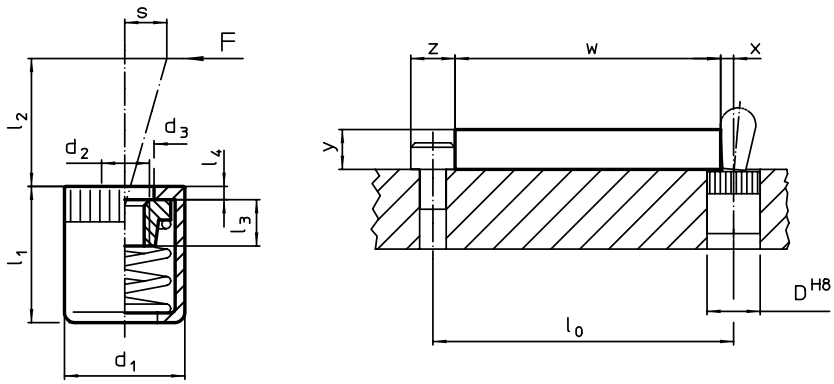

ORDER INFORMATION

Dimensions d_1 [inch]	Dimensions d_2	Spring load F max.[1] ~ [lb]	Dimensions d_3 +0,008 [inch]	Dimensions l_1 -0,08 [inch]	Dimensions l_2 [inch]	Dimensions l_3 [inch]	Dimensions l_4 [inch]	Stroke s [inch]	Location hole D H8 [inch]	max. [°F]	[oz]	Art. No.
light spring load												
7/16	8-32	4,5	0,248	0,433	0,1000	0,177	0,047	0,063	7/16	482	0,082	2B150.1020
		9,0	0,248	0,433	0,2950	0,177	0,047	0,079	7/16	482	0,082	2B150.1025
5/8	1/4-20	22,5	0,409	0,669	0,4530	0,295	0,067	0,126	5/8	482	0,357	2B150.1040
standard spring load												
7/16	8-32	11,2	0,248	0,433	0,1000	0,177	0,047	0,063	7/16	482	0,089	2B150.1021
		16,9	0,248	0,433	0,2950	0,177	0,047	0,079	7/16	482	0,092	2B150.1026
5/8	1/4-20	34,0	0,409	0,669	0,4530	0,295	0,067	0,126	5/8	482	0,321	2B150.1041
heavy spring load												
7/16	8-32	22,5	0,248	0,433	0,1000	0,177	0,047	0,063	7/16	482	0,096	2B150.1022
		34,0	0,248	0,433	0,2950	0,177	0,047	0,079	7/16	482	0,099	2B150.1027
5/8	1/4-20	45,0	0,409	0,669	0,4563	0,295	0,067	0,126	5/8	482	0,346	2B150.1042

[1] statistical average value

ACCESSORIES

	Dimensions d_1 [inch]	[oz]	Art. No.
assembly tool			
	7/16	1,749	22150.0831
	5/8	3,749	22150.0833

2

Lateral Plungers • smooth, with seal, with female thread - INCH

EH 2B150.

PRODUCT DESCRIPTION

To be used for positioning and applying pressure, e.g. during painting and sandblasting. Sealed against chips and dirt.

Material

Seal
- CR

Body
- Aluminium Al

Threaded washer
- Steel, blackened

Spring
- Stainless steel
- Steel, blackened
- Steel, zinc-plated by galvanization

Assembly

Formula for calculating the center distance for the mounting hole:
$l_0 = z/2 + w + x$,
l_0 = center distance,
y = workpiece height,
w = workpiece length,
x = stroke,
z = stop diameter
Calculation dimension x for workpieces:
$x = d_2/2 - s$
Installation by pressing in.

Characteristic

Light spring load = spring from stainless steel
Standard spring load = spring from steel, blackened
Heavy spring load = spring from steel, zinc-plated by galvanization

MORE INFORMATION

Notes

Individual set screws can be screwed in the plate with threaded hole.

Further products

Eccentric Mounting Bushings, for lateral plungers, smooth - INCH . . . . . → p. 173

DRAWING

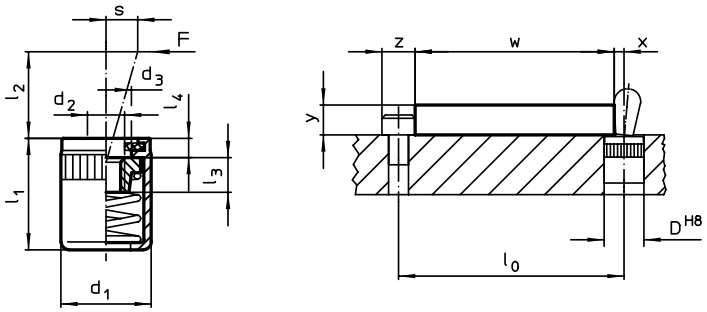

ORDER INFORMATION

Dimensions d_1 [inch]	Dimensions d_2	Spring load F max.[1] ~ [lb]	Dimensions d_3 +0,008 [mm]	l_1 -0,08 [inch]	l_2 [inch]	l_3 [inch]	l_4 [inch]	Stroke s [inch]	Location hole D H8 [inch]	max. [°F]	[oz]	Art. No.
light spring load												
7/16	**8-32**	**4,5**	0,248	0,430	0,100	0,177	0,063	0,063	7/16	230	0,082	**2B150.1120**
		9,0	0,248	0,430	0,295	0,177	0,063	0,079	7/16	230	0,085	**2B150.1125**
5/8	**1/4-20**	**22,5**	0,401	0,709	0,453	0,295	0,079	0,126	5/8	230	0,357	**2B150.1140**
standard spring load												
7/16	**8-32**	**11,2**	0,248	0,430	0,100	0,177	0,063	0,063	7/16	230	0,089	**2B150.1121**
		16,9	0,248	0,430	0,295	0,177	0,063	0,079	7/16	230	0,096	**2B150.1126**
5/8	**1/4-20**	**34,0**	0,401	0,709	0,453	0,295	0,079	0,126	5/8	230	0,317	**2B150.1141**
heavy spring load												
7/16	**8-32**	**22,5**	0,248	0,430	0,100	0,177	0,063	0,063	7/16	230	0,096	**2B150.1122**
		34,0	0,248	0,430	0,295	0,177	0,063	0,079	7/16	230	0,107	**2B150.1127**
5/8	**1/4-20**	**45,0**	0,401	0,709	0,453	0,295	0,079	0,126	5/8	230	0,339	**2B150.1142**

[1] statistical average value

ACCESSORIES

	Dimensions d_1 [inch]	[oz]	Art. No.
assembly tool			
	7/16	1,749	**22150.0831**
	5/8	3,749	**22150.0833**

Eccentric Mounting Bushings • for lateral plungers, smooth - INCH

EH 2B150.

PRODUCT DESCRIPTION

The eccentric mounting bushing is used in conjunction with smooth lateral plungers EH 22150. for positioning or clamping workpieces with large tolerances.

Material

Body

- Steel, blackened

Assembly

Mounting and position determination by means of clamping with threaded pin.

DRAWING

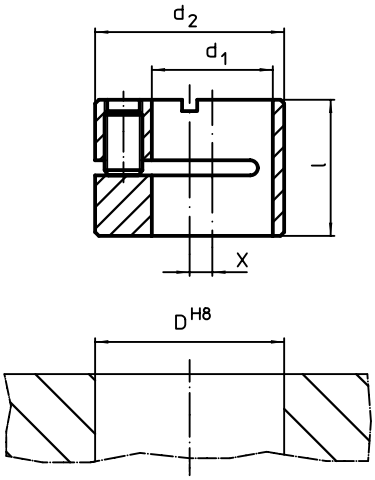

ORDER INFORMATION

Dimensions				Location hole		Art. No.
d_1	d_2	l	x	D H8		
[inch]				[inch]	[oz]	
1/4	1/2	0,390	0,079	1/2	0,214	2B150.0806
7/16	11/16	0,469	0,079	11/16	0,392	2B150.0810
1/2	3/4	0,547	0,079	3/4	0,499	2B150.0812
5/8	1	0,705	0,118	1	1,285	2B150.0816

2

Spring-Loaded Catches • DIN 6310 catches with spring

EH 22200.

PRODUCT DESCRIPTION

Material

- Heat-treated steel, blackened. Hardened where shown by _ _ _ line.

DRAWING

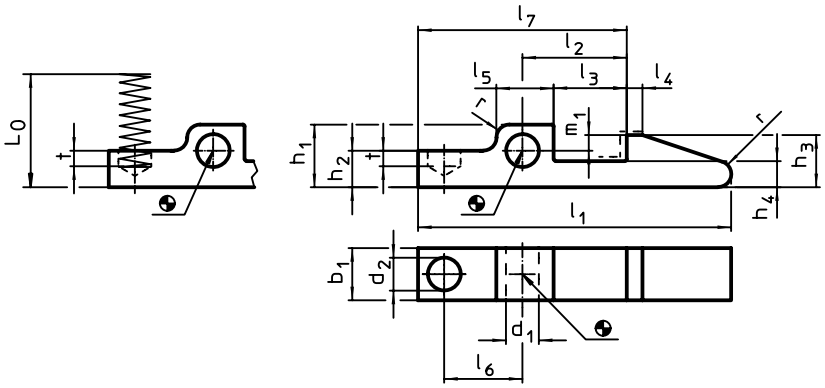

Hardened where shown by _ _ _ line.

ORDER INFORMATION

Dimensions																		Spring rate R ~		Art. No.
l_1	b_1 -0,2	d_1 E9	d_2	h_1	h_2	h_3	h_4	l_2 ±0,1	l_3	l_4	l_5	l_6	l_7	m_1	t	r	L_0 ~	[N/mm]	[g]	
[mm]																				
45	8	4	5,0	9,5	5,5	8	4	15	10	2	9	11	30	2,5	1,5	1,6	17,8	3,0	15	22200.0045
60	10	5	6,3	12,0	7,0	10	5	20	14	3	11	15	40	3,0	3,0	2,5	21,2	4,0	32	22200.0060
80	14	6	8,0	15,0	9,0	14	7	30	22	5	14	23	60	5,0	5,0	4,0	25,1	4,8	80	22200.0080

APPLICATION EXAMPLE

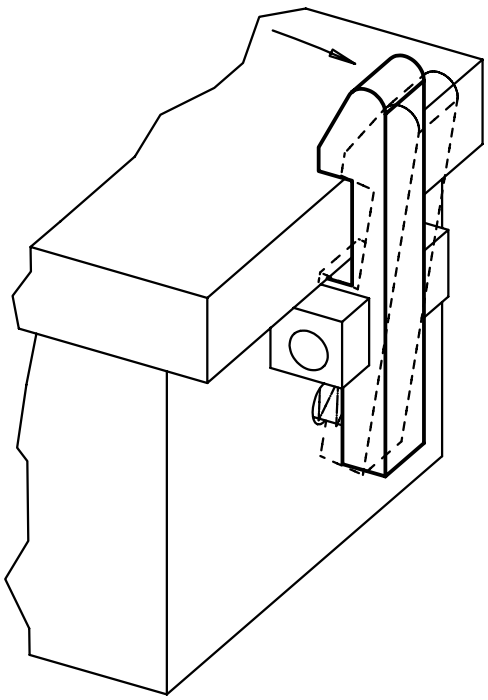

Door Catches

EH 22260.

PRODUCT DESCRIPTION

Material

- Sintered steel

Assembly

Not suitable for fastening by welded connection. Secure by using pins.

DRAWING

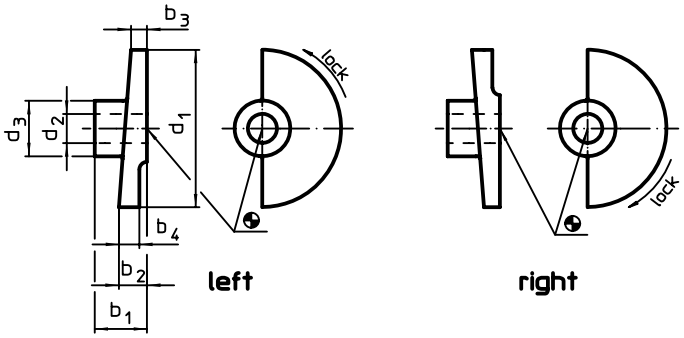

ORDER INFORMATION

Dimensions								Art. No.
d_1	d_2 H8	d_3	b_1	b_2	b_3	b_4		
			[mm]				[g]	
locking by turning to the right								
35	**8**	18	15	7	3	7,0	33	22260.0008
	10	18	15	7	3	7,0	31	22260.0010
65	**12**	23	20	10	5	7,2	103	22260.0012
80	**16**	27	24	12	6	8,8	174	22260.0016
locking by turning to the left								
35	**8**	18	15	7	3	7,0	34	22260.0108
	10	18	15	7	3	7,0	31	22260.0110
65	**12**	23	20	10	5	7,2	103	22260.0112
80	**16**	27	24	12	6	8,8	175	22260.0116

APPLICATION EXAMPLE

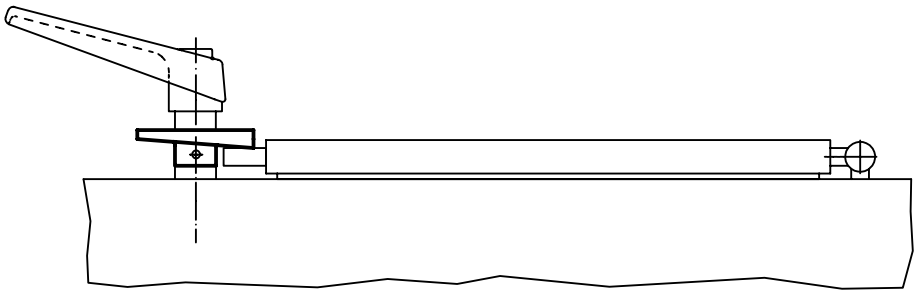

2

Clamping Catches

EH 22260.

PRODUCT DESCRIPTION

Clamping catches have a round running taper surface and enable fast and safe clamping and releasing with a relatively large adjustment range and high tensioning force. Due to the small gradient angle of the taper surface, the clamping catch is self-locking.

Material

Body
- Steel, case-hardened, blackened
- Stainless steel 1.4305, nickel-plated

Screw
- Steel, nitrided
- Stainless steel 1.4021, heat-treated, nickel-plated

Gear lever handle
- Steel, ground, blackened
- Stainless steel 1.4305, dull blasted

Ball knob
- Thermosetting plastic PF 31, black, DIN 319

Assembly

Fix with screw bolt M 10 (WS 6). Ensure a tightening torque of max. 40 Nm.

Operation

The screw bolt and the washer are adjustable. Once screwed in, the clamping catch can easily be turned to the desired position. For Art. No. 22260.0250 / .0251 and 22260.0450 / .0451, the serration helps to put the clamping lever to the preferred position.

MORE INFORMATION

Notes

Left turn type can be supplied on request.

DRAWING

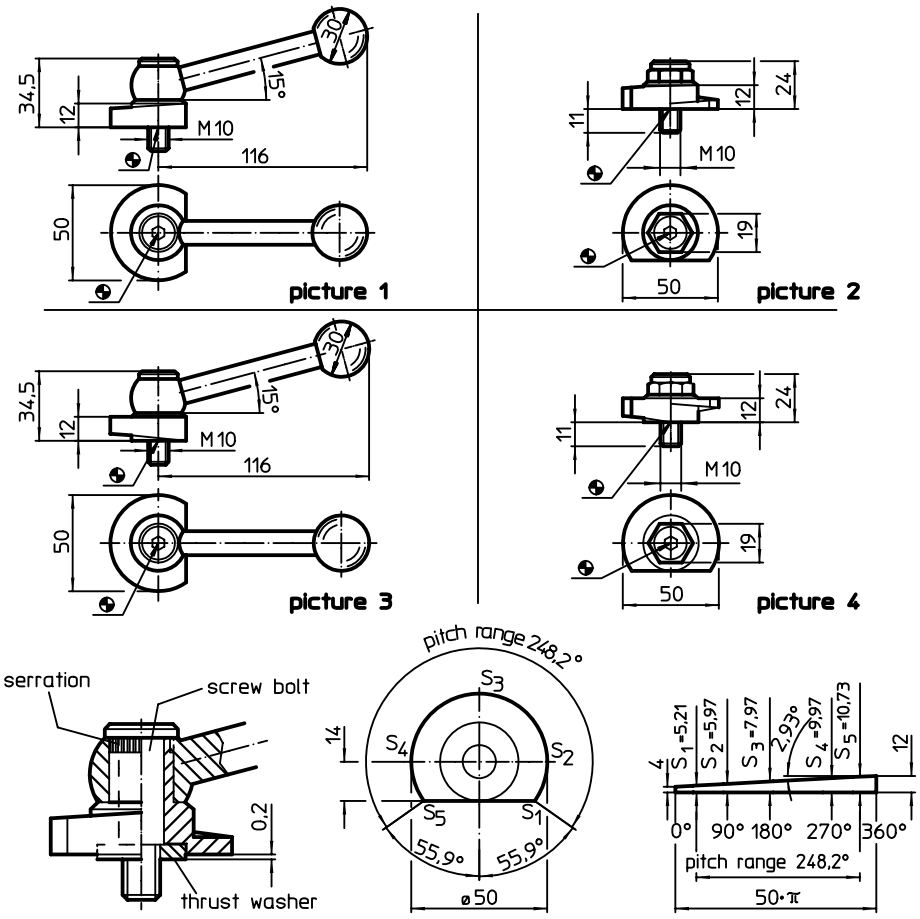

ORDER INFORMATION

Tightening torque max. [Nm]	[g]	Art. No. steel	Art. No. stainless steel
with adjustable clamping lever, pitch opposite to bearing surface – picture 1			
40	304	22260.0250	22260.0251
with clamping screw, pitch opposite to bearing surface – picture 2			
40	154	22260.0350	22260.0351

Tightening torque max. [Nm]	[g]	Art. No. steel	Art. No. stainless steel
with adjustable clamping lever, pitch on bearing surface – picture 3			
40	302	22260.0450	22260.0451
with clamping screw, pitch on bearing surface – picture 4			
40	154	22260.0550	22260.0551

APPLICATION EXAMPLE

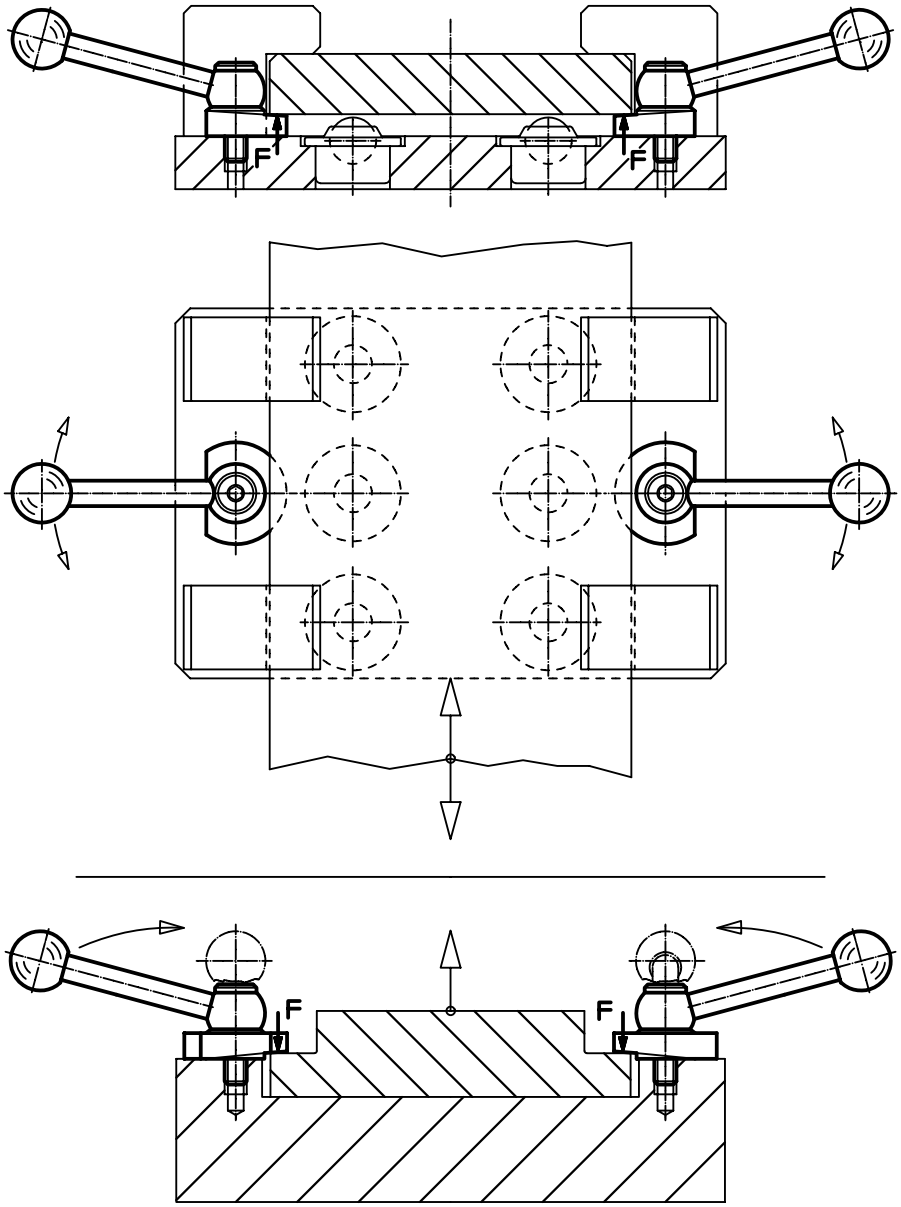

2

Shaft-End Washers

EH 22270.

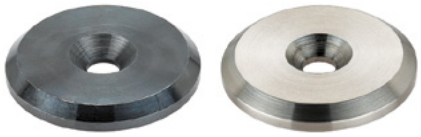

PRODUCT DESCRIPTION

Material

- Free cutting steel, unhardened, blackened
- Stainless steel 1.4305

DRAWING

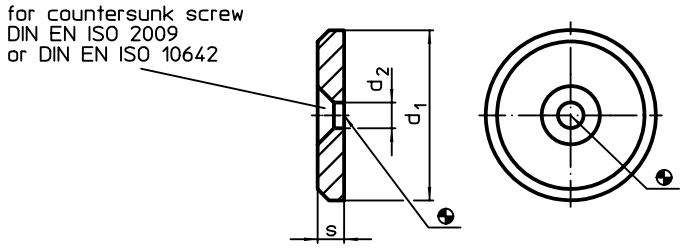

ORDER INFORMATION

Dimensions				Art. No.	
d_1	d_2	s		free cutting steel	stainless steel
[mm]			[g]		
16	4,5	3,0	3,6	22270.0016	22270.0116
20	4,5	3,0	6,1	22270.0020	22270.0120
22	5,5	3,5	8,1	22270.0022	22270.0122
25	5,5	3,5	11,0	22270.0025	22270.0125
28	5,5	3,5	14,0	22270.0028	22270.0128
32	6,6	4,0	22,0	22270.0032	22270.0132
36	6,6	4,0	28,0	22270.0036	22270.0136
40	6,6	5,0	44,0	22270.0040	22270.0140
45	6,6	6,0	68,0	22270.0045	22270.0145
52	6,6	6,0	92,0	22270.0052	22270.0152

APPLICATION EXAMPLE

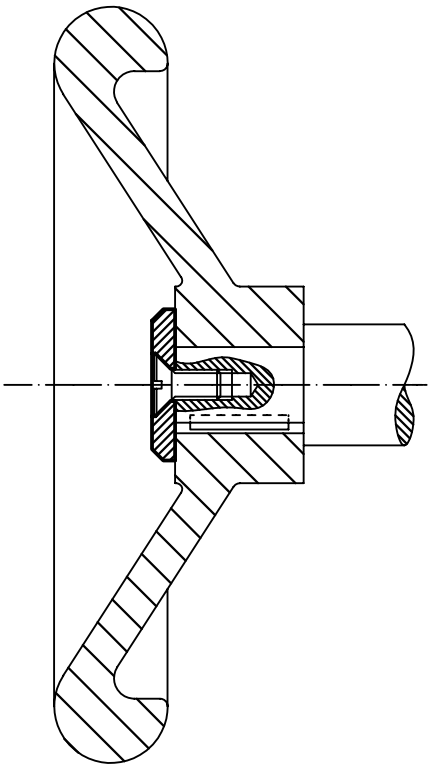

Captive C-Washers • DIN 6371 with countersunk screw DIN 923

EH 22280.

PRODUCT DESCRIPTION

Material

Countersunk screw
- Steel, blackened, quality 5.8

Captive C-Washer
- Heat-treated steel, tempered, blackened

Assembly

The captive C-washers can be installed on both sides using the included bolt. You can select either clockwise or anti-clockwise rotation.

DRAWING

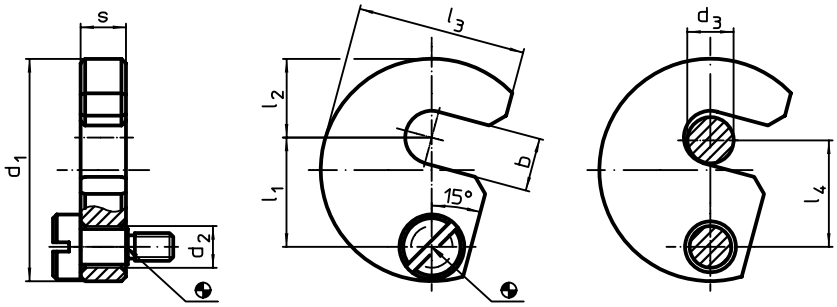

ORDER INFORMATION

Nominal size d_3 [mm]	Dimensions b [mm]	d_1	d_2	l_1	l_2	l_3	l_4	s -0,2	Suitable screw [mm]	[g]	Art. No.
6	7,5	38	9	19,6	11	29,0	19	9,8	M6 x 10	66	22280.0006
8	9,5	43	9	21,6	14	32,5	21	9,8	M6 x 10	81	22280.0008
10	11,5	48	9	23,6	17	36,5	23	9,8	M6 x 10	99	22280.0010
12	13,5	61	11	29,6	22	45,0	29	11,8	M8 x 12	194	22280.0012
16	17,5	68	11	33,6	25	50,0	33	11,8	M8 x 12	229	22280.0016
20	21,5	74	11	36,6	28	55,0	36	11,8	M8 x 12	265	22280.0020
24	25,5	82	11	40,6	32	62,0	40	15,8	M8 x 16	430	22280.0024
30	32,0	97	11	49,0	39	73,0	48	15,8	M8 x 16	584	22280.0030

APPLICATION EXAMPLE

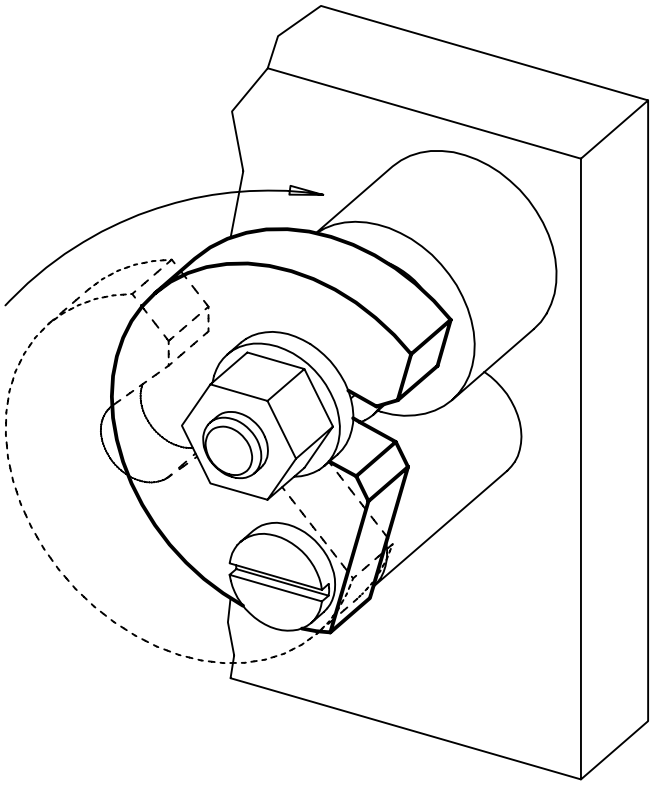

2

C-Washers • DIN 6372

EH 22290.

PRODUCT DESCRIPTION

Material

- Heat-treated steel, tempered, blackened

DRAWING

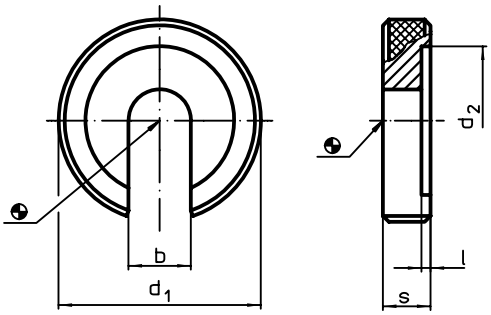

ORDER INFORMATION

Nominal size [mm]	Dimensions b [mm]	d1 [mm]	d2 [mm]	l [mm]	s [mm]	[g]	Art. No.
6	6,4	22	16	0,8	6	13	22290.0006
8	8,4	28	21	1,0	7	23	22290.0008
10	10,5	34	25	1,2	8	38	22290.0010
12	13,0	40	30	1,8	9	56	22290.0012
16	17,0	56	37	1,8	12	164	22290.0016
20	21,0	64	45	2,0	14	241	22290.0020
24	25,0	75	52	2,0	16	376	22290.0024
30	31,0	90	65	2,0	18	610	22290.0030
36	37,0	100	75	2,5	20	796	22290.0036

APPLICATION EXAMPLE

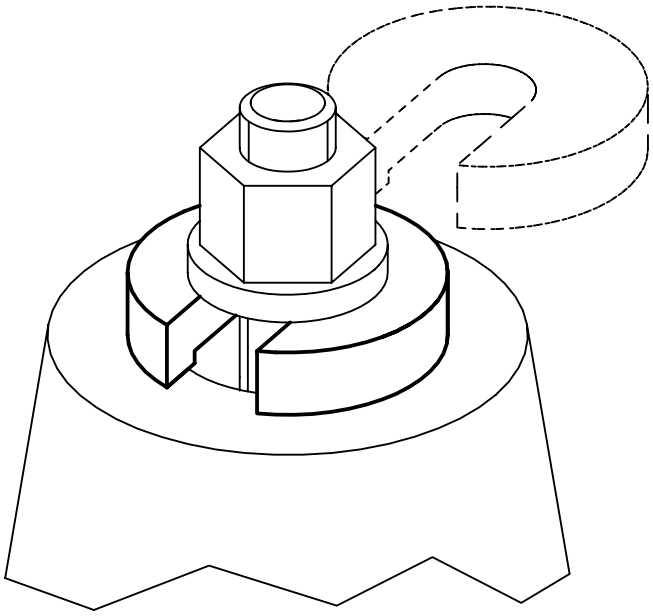

Ball Lock Connectors • self-locking, with holder

EH 22330.

PRODUCT DESCRIPTION

Parts can be connected fast and easily with the ball lock connector in combination with the locating bushings.
The locating bushings are made from stainless steel. There are two versions available that can be mounted into wood (picture 2 and picture 4) and one version that can be mounted into plastic (picture 3). Both bushings (picture 2 and picture 3) allow an interlock of 4x90°. The bushing (picture 4) enables a 360° rotation in the locked state.
As a robust tool, the item is made from stainless steel. The ball lock connector is maintenance-free, soundless and secured against loss.

Material

Pin part
- Stainless steel 1.4305

Sling swivel ports
- Stainless steel 1.4305

Ball
- Stainless steel

Spring
- Stainless steel

Assembly

Mounting into wood (picture 2 and picture 4)
1. Insert location hole and pilot hole for safety bolt according to specifications
2. Optionally recommended is the use of adhesive for securing
3. Press in bushing
4. Secure bushing with a screw

Note: The bore diameter (D_2) for the pilot hole of the safety bolt depends on the screw used.

Mounting into plastic (picture 3)
1. Insert location hole according specifications
2. Optionally recommended is the use of adhesive for securing
3. Screw in bushing

Note: The bore diameter to be chosen for the location hole depends on the hardness of the plastic.

Operation

The balls are unlocked by pressing the knob.

Characteristic

At l_1 or l_2: marking line

MORE INFORMATION

Notes

Special types on request.

Further products

Ball Lock Connectors, self-locking, with holder, compact construction. . . . . → p. 183
Ball Lock Connectors, self-locking, with holding rings . . . . . → p. 185

DRAWING

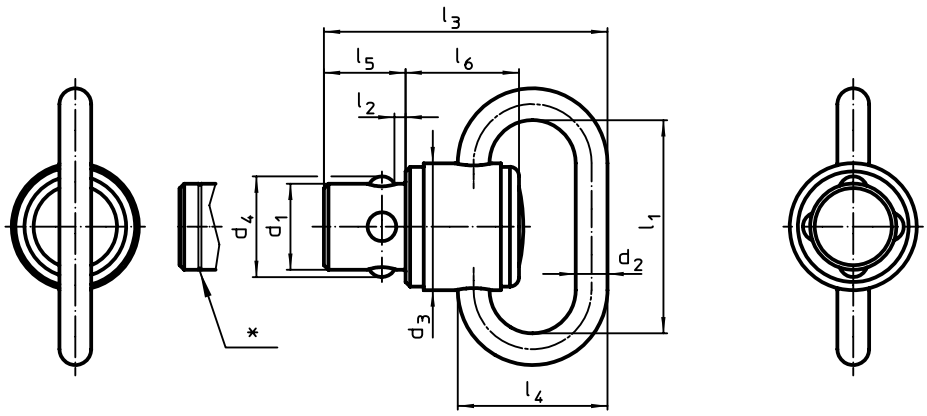

picture 1

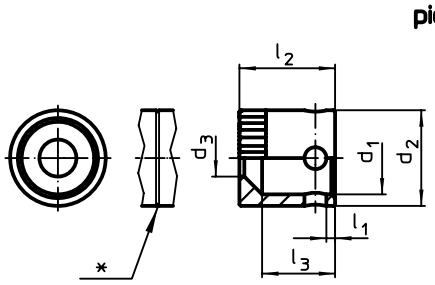

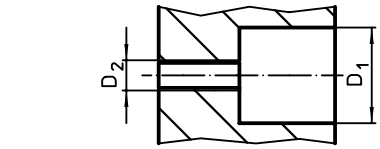

picture 2

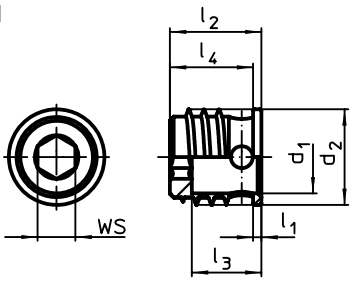

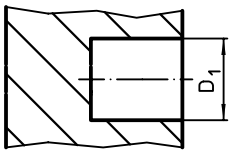

picture 3

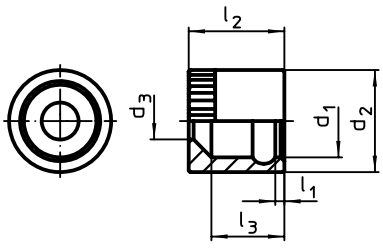

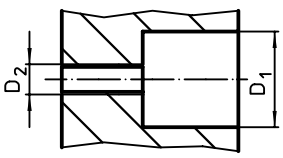

picture 4

* For l_1 or l_2 = 1,5 with marking.

2

ORDER INFORMATION

Nominal diameter d_1 [mm]	Dimensions l_1 [mm]	l_2	d_2	d_3	d_4	l_3	l_4	l_5	l_6	Load capacity max. [kN]	min. [°C]	max.	[g]	Art. No.
ball lock connector – picture 1														
9,50	**23,0**	**1,00**	3,50	14,0	11,1	31,30	16,5	9	12,5	1,2	-50	150	21,0	22330.0110
		1,50	3,50	14,0	11,1	31,30	16,5	9	12,5	1,2	-50	150	21,0	22330.0111
	40,0	**1,00**	4,50	14,0	11,1	36,60	23,0	9	12,5	2,0	-50	150	34,0	22330.0120
		1,50	4,50	14,0	11,1	36,60	23,0	9	12,5	2,0	-50	150	34,0	22330.0121
bushing, mounting in wood – picture 2														
9,55	**1,0**	**12,65**	12,65	4,9	–	9,65	–	–	–	–	-50	150	7,0	22330.0305
	1,5	**12,65**	12,65	4,9	–	9,65	–	–	–	–	-50	150	7,0	22330.0306
bushing, mounting in plastic – picture 3														
9,55	**1,0**	**12,10**	12,65	–	10,7	9,20	11,0	–	–	–	-50	150	5,0	22330.0310
	1,5	**12,10**	12,65	–	10,7	9,20	11,0	–	–	–	-50	150	5,0	22330.0311
bushing, mounting in wood, 360° function – picture 4														
9,55	**1,0**	**12,65**	13,50	4,9	–	9,65	–	–	–	–	-50	150	8,5	22330.0315
	1,5	**12,65**	13,50	4,9	–	9,65	–	–	–	–	-50	150	8,5	22330.0316

APPLICATION EXAMPLE

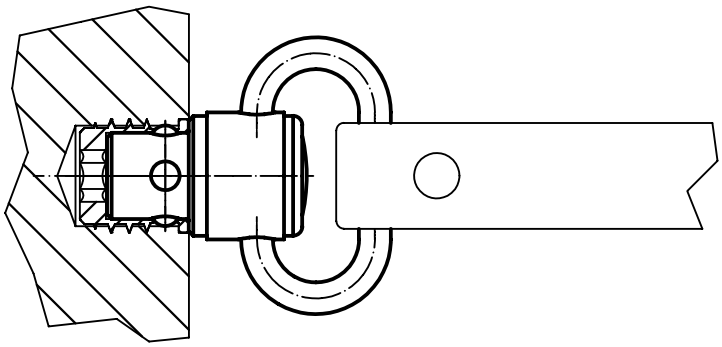

Ball Lock Connectors • self-locking, with holder, compact construction

EH 22330.

PRODUCT DESCRIPTION

Parts can be connected fast and easily with the ball lock connector in combination with the locating bushings.
The locating bushings are made from stainless steel. There are two versions available that can be mounted into wood (picture 2 and picture 4) and one version that can be mounted into plastic (picture 3). Both bushings (picture 2 and picture 3) allow an interlock of 4x90°. The bushing (picture 4) enables a 360° rotation in the locked state.
As a robust tool, the item is made from stainless steel. The ball lock connector is maintenance-free, soundless and secured against loss.

Material

Pin part
- Stainless steel 1.4542

Sling swivel ports
- Stainless steel 1.4305

Ball
- Stainless steel

Spring
- Stainless steel

Assembly

Mounting into wood (picture 2 and picture 4)
1. Insert location hole and pilot hole for safety bolt according to specifications
2. Optionally recommended is the use of adhesive for securing
3. Press in bushing
4. Secure bushing with a screw

Note: The bore diameter (D_2) for the pilot hole of the safety bolt depends on the screw used.

Mounting into plastic (picture 3)
1. Insert location hole according specifications
2. Optionally recommended is the use of adhesive for securing
3. Screw in bushing

Note: The bore diameter to be chosen for the location hole depends on the hardness of the plastic.

Operation

The balls are unlocked by pressing the knob.

MORE INFORMATION

Notes

Special types on request.

Further products

Ball Lock Connectors, self-locking, with holder. . . . . → p. 181
Ball Lock Connectors, self-locking, with holding rings . . . . . → p. 185

MASSZEICHNUNG

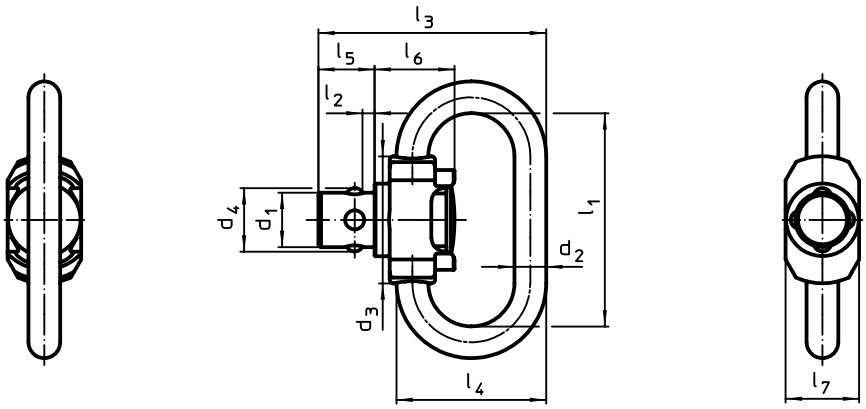

picture 1

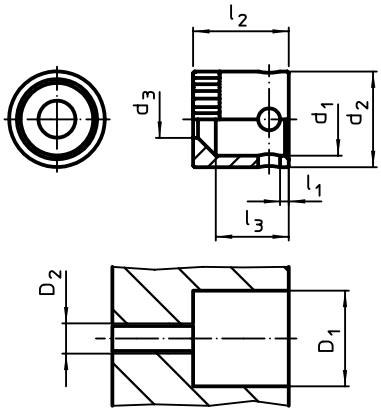

picture 2

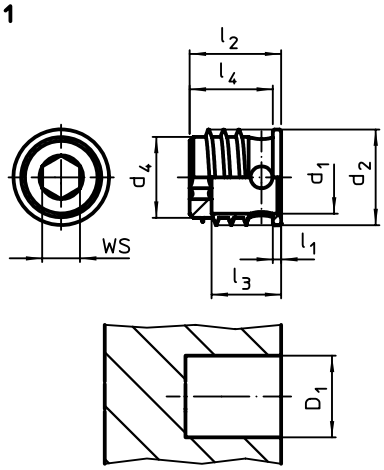

picture 3

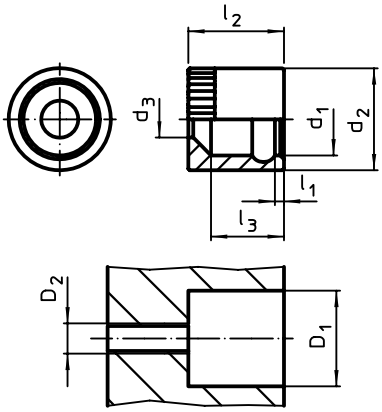

picture 4

ORDER INFORMATION

Nominal diameter d_1 [mm]	Dimensions l_1 [mm]	l_2	d_2	d_3	d_4	l_3	l_4	l_5	l_6	l_7	Load capacity max. [kN]	min. [°C]	max. [°C]	[g]	Art. No.
ball lock connector – picture 1															
6,00	**23**	**1**	3,50	14,0	7,0	22,0	16,5	6,2	8,8	8,1	1,5	-50	150	10,0	**22330.0402**
bushing, mounting in wood – picture 2															
6,05	**1**	**9**	8,15	3,1	–	6,5	–	–	–	–	–	-50	150	1,7	**22330.0405**
bushing, mounting in plastic – picture 3															
6,05	**1**	**9**	10,00	–	8,2	6,5	8,2	–	–	–	–	-50	150	2,1	**22330.0407**
bushing, mounting in wood, 360° function – picture 4															
6,05	**1**	**9**	9,15	3,1	–	6,5	–	–	–	–	–	-50	150	2,6	**22330.0409**

Ball Lock Connectors • self-locking, with holding rings

EH 22340.

PRODUCT DESCRIPTION

With the ball connector, parts and tools can be secured or connected quickly and easily.

Material

Pin
- Stainless steel 1.4305

Bushing
- Stainless steel 1.4305

Rings
- Stainless steel

Spring
- Stainless steel

Operation

The balls are unlocked by pressing the knob.

MORE INFORMATION

Notes

Pin and bushing separately on request.

Further products

Ball Lock Connectors, self-locking, with holder. . . . . → p. 181
Ball Lock Connectors, self-locking, with holder, compact construction. . . . . → p. 183

DRAWING

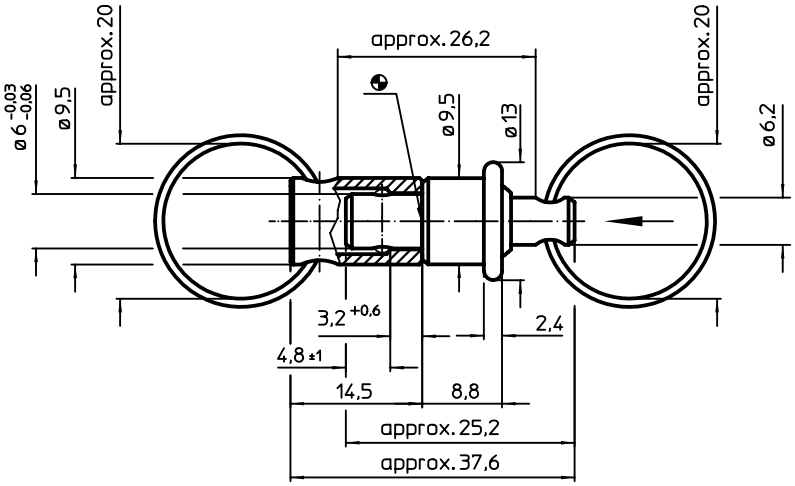

ORDER INFORMATION

Load capacity max. [N]	max. [°C]	[g]	Art. No.
30	250	15	22340.0905

APPLICATION EXAMPLE

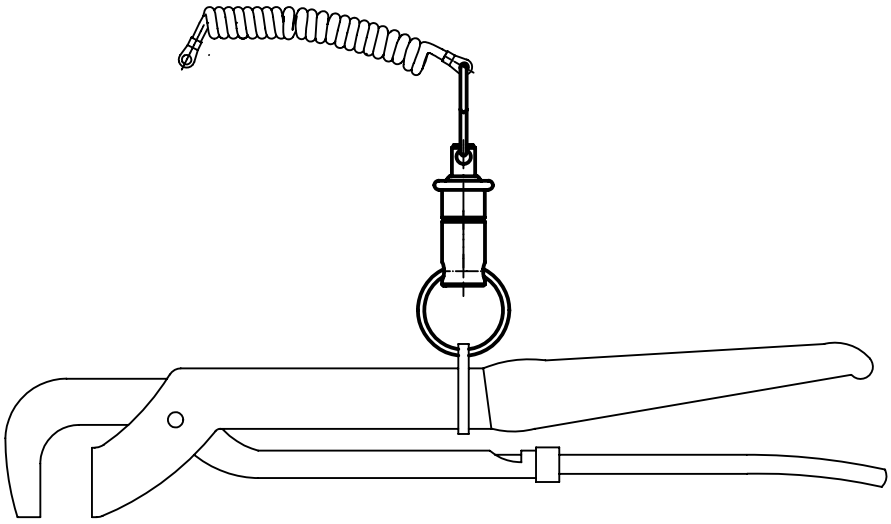

2

SELF-LOCKING LIFTING PINS

READY TO SUPPORT ANY LOAD

LIFTING CAPACITY OF UP TO 1,000 KG

Aside from delivering an exceptional lifting capacity, our lifting pins require next to no effort as they are in no need of a thread. Better still, they ensure maximum safety during use.

The assortment was also extended by a variant with manual handle. This allows easy, safe and reliable manual lifting and transport of unhandy components.

www.halder.com/
LiftingPins-Video

Lifting Pins • self-locking

EH 22350.

PRODUCT DESCRIPTION

Heavy-duty lifting element for quick and easy use, with moveable shackle and locking stud to provide protection against unintentional unlocking. Special lifting devices, e.g. threads for ring bolts, are no longer required on the workpiece.
All versions are corrosion-resistant.

Material

Pin part
- Heat-treated steel, tempered, manganese phosphated

Press button
- Aluminium, red anodised

Shackle
- Heat-treated steel, tempered, manganese phosphated

Spring
- Stainless steel

Assembly

Simple H11 boreholes are sufficient.
Each lifting pin contains an instruction manual with an EC Declaration of Conformity.

Operation

The balls are unlocked by pressing the knob.

MORE INFORMATION

Accessories

As accessories, we offer matching locating bushings for d_1 = 8, 10, 12, 16 and 20

Further products

Lifting Pins, self-locking, stainless steel . . . . . → p. 189
Locating Bushings, for lifting pins . . . . → p. 191
Locating Bushings, plain, for lifting pins . . . . . → p. 193
Locating Bushings with Seal, plain, for lifting pins. . . . . → p. 195
Threaded Lifting Pins, self-locking. . . . → p. 199

DRAWING

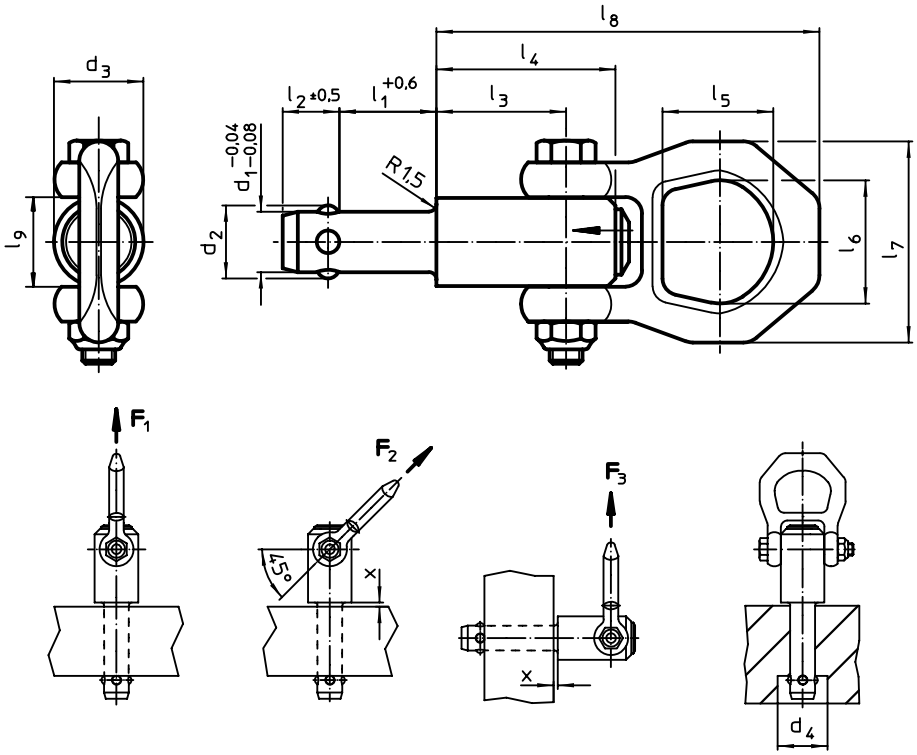

ORDER INFORMATION

Dimensions													Carrying force[1]			x		Location hole H11	max.		Art. No.
d_1 -0,04 -0,08	l_1 +0,6	d_2	d_3	d_4 min.	l_2	l_3	l_4	l_5	l_6	l_7	l_8	l_9	F_1	F_2	F_3	[1] min.	max.				
[mm]													[kN]			[mm]		[mm]	[°C]	[g]	
8,0	10	9,35	21,5	9,85	8,75	25,7	36,0	27,0	30	49	87,5	21,5	1,5	1,2	0,5	1,5	5	8,0	250	218	22350.0601
	15	9,35	21,5	9,85	8,75	25,7	36,0	27,0	30	49	87,5	21,5	1,5	1,2	0,5	1,5	10	8,0	250	220	22350.0602
	25	9,35	21,5	9,85	8,75	25,7	36,0	27,0	30	49	87,5	21,5	1,5	1,2	0,5	1,5	15	8,0	250	223	22350.0604
	35	9,35	21,5	9,85	8,75	25,7	36,0	27,0	30	49	87,5	21,5	1,5	1,2	0,5	1,5	15	8,0	250	226	22350.0606

[1] for a 5-fold safety against breakage →

Dimensions													Carrying force[1]			x		Location hole H11	max.		Art. No.
d_1 -0,04 -0,08	l_1 +0,6	d_2	d_3	d_4 min.	l_2	l_3	l_4	l_5	l_6	l_7	l_8	l_9	F_1	F_2	F_3	[1] min.	max.				
[mm]													[kN]			[mm]		[mm]	[°C]	[g]	
8,3	10	9,65	21,5	10,05	8,75	25,7	36,0	27,0	30	49	87,5	21,5	1,5	1,2	0,5	1,5	5	8,3	250	218	22350.0611
	15	9,65	21,5	10,05	8,75	25,7	36,0	27,0	30	49	87,5	21,5	1,5	1,2	0,5	1,5	10	8,3	250	219	22350.0612
	25	9,65	21,5	10,05	8,75	25,7	36,0	27,0	30	49	87,5	21,5	1,5	1,2	0,5	1,5	15	8,3	250	223	22350.0614
	35	9,65	21,5	10,05	8,75	25,7	36,0	27,0	30	49	87,5	21,5	1,5	1,2	0,5	1,5	15	8,3	250	228	22350.0616
10,0	15	11,70	21,5	12,20	10,20	25,7	36,0	27,0	30	49	87,5	21,5	2,7	2,4	2,1	1,5	10	10,0	250	226	22350.0621
	25	11,70	21,5	12,20	10,20	25,7	36,0	27,0	30	49	87,5	21,5	2,7	2,4	2,1	1,5	10	10,0	250	238	22350.0623
	35	11,70	21,5	12,20	10,20	25,7	36,0	27,0	30	49	87,5	21,5	2,7	2,4	2,1	1,5	10	10,0	250	244	22350.0625
	50	11,70	21,5	12,20	10,20	25,7	36,0	27,0	30	49	87,5	21,5	2,7	2,4	2,1	1,5	10	10,0	250	252	22350.0627
12,0	15	14,20	21,5	14,70	11,00	25,7	36,0	27,0	30	49	87,5	21,5	3,5	3,2	2,8	1,5	10	12,0	250	238	22350.0631
	25	14,20	21,5	14,70	11,00	25,7	36,0	27,0	30	49	87,5	21,5	3,5	3,2	2,8	1,5	15	12,0	250	243	22350.0633
	35	14,20	21,5	14,70	11,00	25,7	36,0	27,0	30	49	87,5	21,5	3,5	3,2	2,8	1,5	15	12,0	250	251	22350.0635
	50	14,20	21,5	14,70	11,00	25,7	36,0	27,0	30	49	87,5	21,5	3,5	3,2	2,8	1,5	15	12,0	250	268	22350.0637
13,8	25	16,20	21,5	16,70	13,00	25,7	36,0	27,0	30	49	87,5	21,5	3,8	3,5	2,8	1,5	15	13,8	250	251	22350.0651
	50	16,20	21,5	16,70	13,00	25,7	36,0	27,0	30	49	87,5	21,5	3,8	3,5	2,8	1,5	35	13,8	250	279	22350.0653
	75	16,20	21,5	16,70	13,00	25,7	36,0	27,0	30	49	87,5	21,5	3,8	3,5	2,8	1,5	35	13,8	250	309	22350.0655
16,0	25	18,60	25,0	19,20	15,10	31,0	44,5	27,0	30	49	92,8	21,5	4,8	4,5	4,1	1,5	15	16,0	250	312	22350.0641
	50	18,60	25,0	19,20	15,10	31,0	44,5	27,0	30	49	92,8	21,5	4,8	4,5	4,1	1,5	35	16,0	250	353	22350.0643
	75	18,60	25,0	19,20	15,10	31,0	44,5	27,0	30	49	92,8	21,5	4,8	4,5	4,1	1,5	40	16,0	250	388	22350.0645
20,0	50	24,50	30,0	25,00	19,70	36,5	52,0	32,6	36	56	114,0	26,0	10,0	8,5	6,5	1,5	25	20,0	250	607	22350.0673
	75	24,50	30,0	25,00	19,70	36,5	52,0	32,6	36	56	114,0	26,0	10,0	8,5	6,5	1,5	30	20,0	250	666	22350.0675

[1] for a 5-fold safety against breakage

APPLICATION EXAMPLE

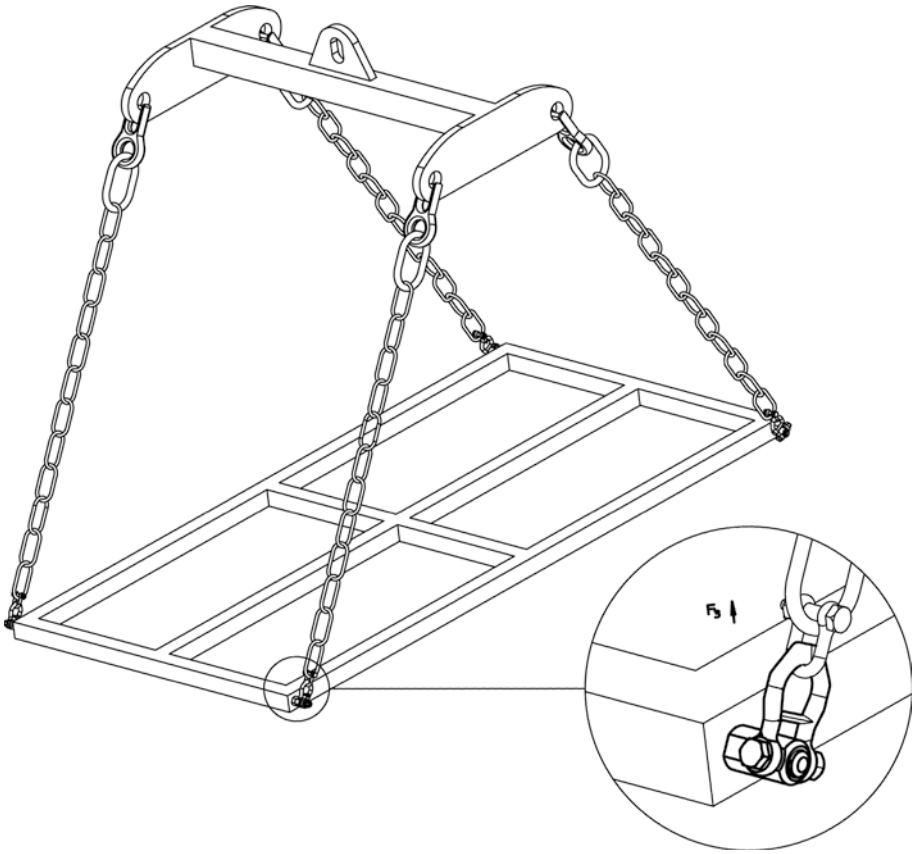

Lifting Pins • self-locking, stainless steel

EH 22350.

PRODUCT DESCRIPTION

Heavy-duty lifting element for quick and easy use, with moveable shackle and locking stud to provide protection against unintentional unlocking. Special lifting devices, e.g. threads for ring bolts, are no longer required on the workpiece.
Corrosion and weathering resistant, thus also suitable for outdoor application. Very solid, precipitation-hardened pin with an extreme load capacity.

Material

Pin part
- Stainless steel 1.4542, precipitation-hardened

Press button
- Aluminium, red anodised

Shackle
- Stainless steel 1.4571

Spring
- Stainless steel

Assembly

Simple H11 boreholes are sufficient.
Each lifting pin contains an instruction manual with an EC Declaration of Conformity.

Operation

The balls are unlocked by pressing the knob.

MORE INFORMATION

Accessories

As accessories, we offer matching locating bushings for d_1 = 8, 10, 12, 16 and 20

Further products

Lifting Pins, self-locking . . . . . → p. 187
Locating Bushings, for lifting pins . . . . → p. 191
Locating Bushings, plain, for lifting pins . . . . . → p. 193
Locating Bushings with Seal, plain, for lifting pins. . . . . → p. 195
Threaded Lifting Pins, self-locking. . . . → p. 199

DRAWING

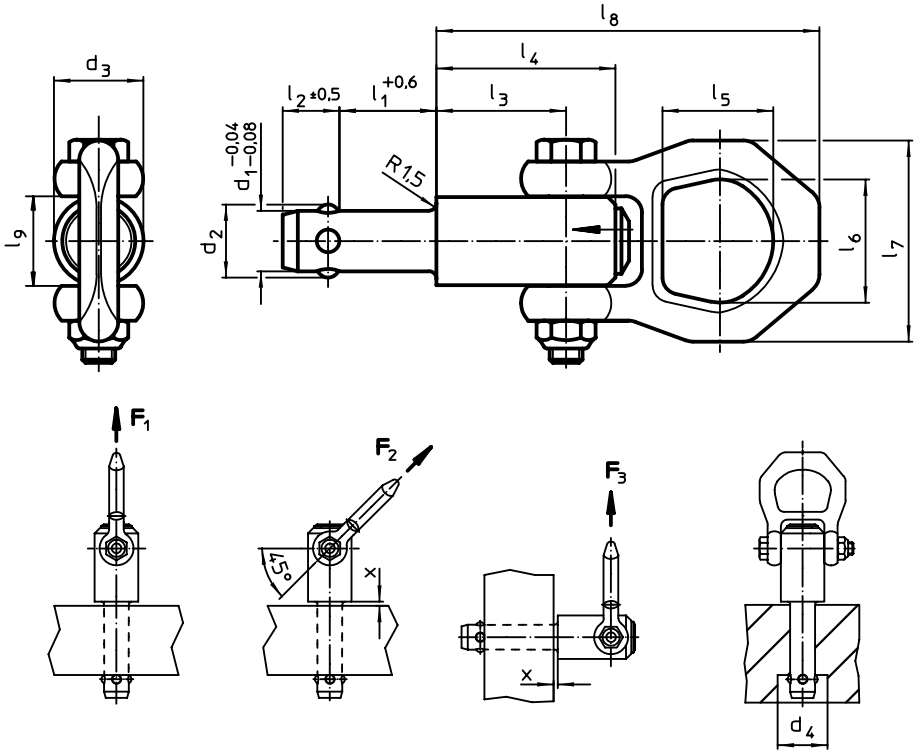

ORDER INFORMATION

Dimensions													Carrying force[1]			x		Location hole H11	max.		Art. No.
d_1 -0,04 -0,08	l_1 +0,6	d_2	d_3	d_4 min.	l_2	l_3	l_4	l_5	l_6	l_7	l_8	l_9	F_1	F_2	F_3	[1] min.	max.				
[mm]													[kN]			[mm]		[mm]	[°C]	[g]	
8,0	**10**	9,35	21,5	9,85	8,75	25,7	36,0	27,0	30	49	87,5	21,5	1,5	1,2	0,5	1,5	5	8,0	250	221	22350.0701
	15	9,35	21,5	9,85	8,75	25,7	36,0	27,0	30	49	87,5	21,5	1,5	1,2	0,5	1,5	10	8,0	250	222	22350.0702
	25	9,35	21,5	9,85	8,75	25,7	36,0	27,0	30	49	87,5	21,5	1,5	1,2	0,5	1,5	15	8,0	250	225	22350.0704
	35	9,35	21,5	9,85	8,75	25,7	36,0	27,0	30	49	87,5	21,5	1,5	1,2	0,5	1,5	15	8,0	250	229	22350.0706

[1] for a 5-fold safety against breakage →

Dimensions													Carrying force[1]			x		Location hole H11	max.		Art. No.
d_1 -0,04 -0,08	l_1 +0,6	d_2	d_3	d_4 min.	l_2	l_3	l_4	l_5	l_6	l_7	l_8	l_9	F_1	F_2	F_3	[1] min.	max.				
[mm]													[kN]			[mm]		[mm]	[°C]	[g]	
8,3	10	9,65	21,5	10,05	8,75	25,7	36,0	27,0	30	49	87,5	21,5	1,5	1,2	0,5	1,5	5	8,3	250	222	22350.0711
	15	9,65	21,5	10,05	8,75	25,7	36,0	27,0	30	49	87,5	21,5	1,5	1,2	0,5	1,5	10	8,3	250	223	22350.0712
	25	9,65	21,5	10,05	8,75	25,7	36,0	27,0	30	49	87,5	21,5	1,5	1,2	0,5	1,5	15	8,3	250	225	22350.0714
	35	9,65	21,5	10,05	8,75	25,7	36,0	27,0	30	49	87,5	21,5	1,5	1,2	0,5	1,5	15	8,3	250	231	22350.0716
10,0	15	11,70	21,5	12,20	10,20	25,7	36,0	27,0	30	49	87,5	21,5	2,7	2,4	2,1	1,5	10	10,0	250	233	22350.0721
	25	11,70	21,5	12,20	10,20	25,7	36,0	27,0	30	49	87,5	21,5	2,7	2,4	2,1	1,5	10	10,0	250	243	22350.0723
	35	11,70	21,5	12,20	10,20	25,7	36,0	27,0	30	49	87,5	21,5	2,7	2,4	2,1	1,5	10	10,0	250	250	22350.0725
	50	11,70	21,5	12,20	10,20	25,7	36,0	27,0	30	49	87,5	21,5	2,7	2,4	2,1	1,5	10	10,0	250	257	22350.0727
12,0	15	14,20	21,5	14,70	11,00	25,7	36,0	27,0	30	49	87,5	21,5	3,5	3,2	2,8	1,5	10	12,0	250	246	22350.0731
	25	14,20	21,5	14,70	11,00	25,7	36,0	27,0	30	49	87,5	21,5	3,5	3,2	2,8	1,5	15	12,0	250	255	22350.0733
	35	14,20	21,5	14,70	11,00	25,7	36,0	27,0	30	49	87,5	21,5	3,5	3,2	2,8	1,5	15	12,0	250	265	22350.0735
	50	14,20	21,5	14,70	11,00	25,7	36,0	27,0	30	49	87,5	21,5	3,5	3,2	2,8	1,5	15	12,0	250	273	22350.0737
13,8	25	16,20	21,5	16,70	13,00	25,7	36,0	27,0	30	49	87,5	21,5	3,8	3,5	2,8	1,5	15	13,8	250	255	22350.0751
	50	16,20	21,5	16,70	13,00	25,7	36,0	27,0	30	49	87,5	21,5	3,8	3,5	2,8	1,5	35	13,8	250	283	22350.0753
	75	16,20	21,5	16,70	13,00	25,7	36,0	27,0	30	49	87,5	21,5	3,8	3,5	2,8	1,5	35	13,8	250	311	22350.0755
16,0	25	18,60	25,0	19,20	15,10	31,0	44,5	27,0	30	49	92,8	21,5	4,8	4,5	4,1	1,5	15	16,0	250	313	22350.0741
	50	18,60	25,0	19,20	15,10	31,0	44,5	27,0	30	49	92,8	21,5	4,8	4,5	4,1	1,5	35	16,0	250	367	22350.0743
	75	18,60	25,0	19,20	15,10	31,0	44,5	27,0	30	49	92,8	21,5	4,8	4,5	4,1	1,5	40	16,0	250	403	22350.0745
20,0	50	24,50	30,0	25,00	19,70	36,5	52,0	32,6	36	56	114,0	26,0	10,0	8,5	6,5	1,5	25	20,0	250	607	22350.0773
	75	24,50	30,0	25,00	19,70	36,5	52,0	32,6	36	56	114,0	26,0	10,0	8,5	6,5	1,5	30	20,0	250	666	22350.0775

[1] for a 5-fold safety against breakage

APPLICATION EXAMPLE

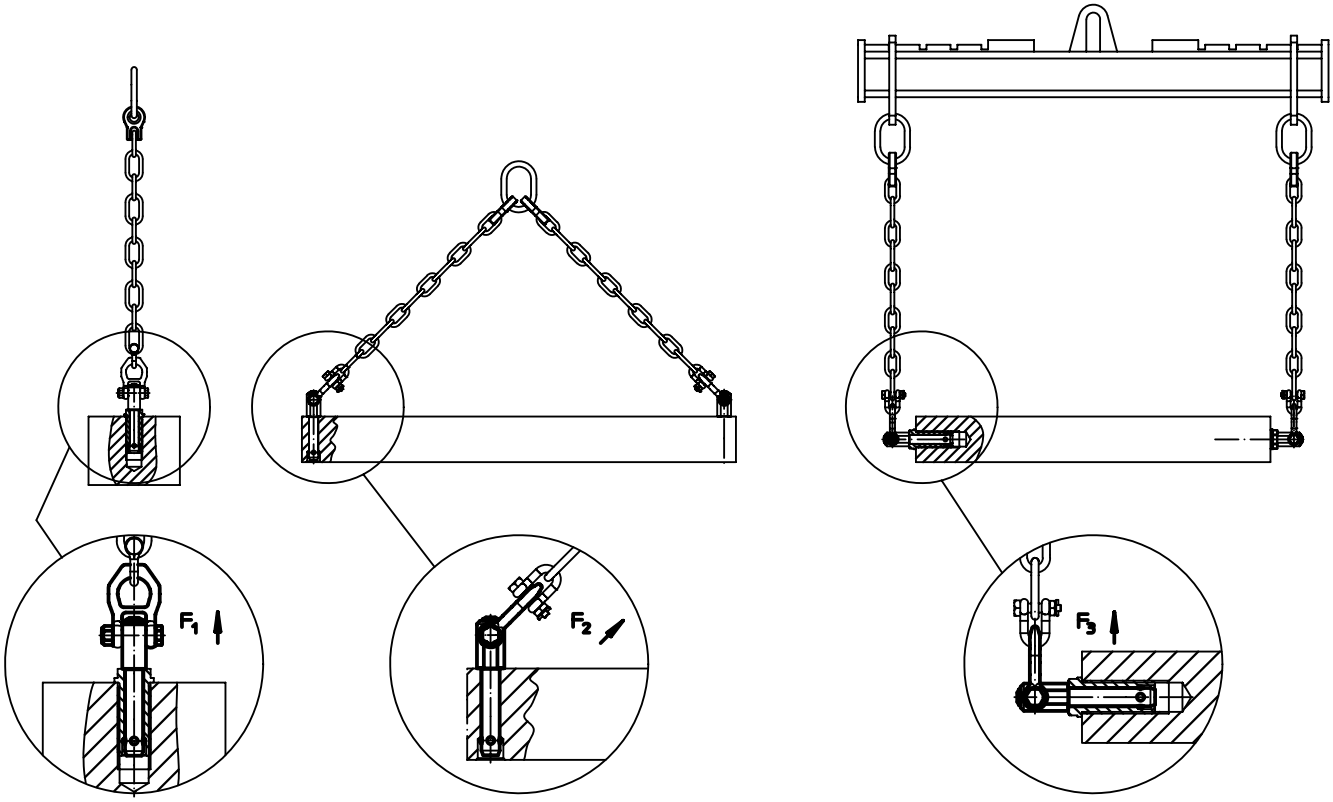

Locating Bushings • for lifting pins

EH 22350.

PRODUCT DESCRIPTION

Locating bushings are used for quick and safe locating of lifting pins EH 22350. / EH 22351.
Corrosion and abrasion resistant.

Material

- Stainless steel 1.4542, precipitation-hardened

Assembly

Safe tolerances and consistent function.

Easily incorporated into different materials.
Can be mounted in blind holes.
For thin-walled parts, lock nuts are used for assembly.

DRAWING

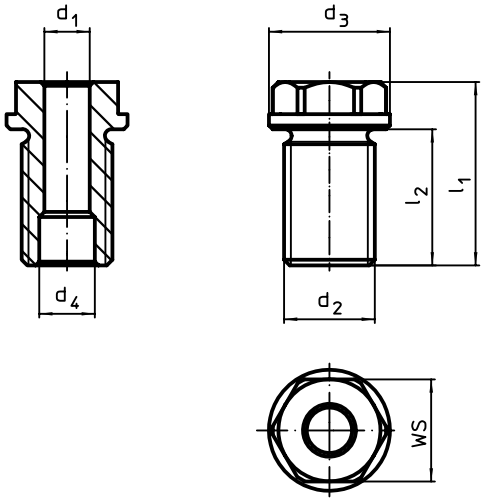

ORDER INFORMATION

Dimensions d_1 H11	Dimensions d_2	For nominal length l	Dimensions d_3 -0,2	Dimensions d_4 +0,3	Dimensions l_1	Dimensions l_2	WS	Tightening torque max.	x[1]	Carrying force[1] F_1	Carrying force[1] F_2	Carrying force[1] F_3	For lifting pin		Art. No.
[mm]		[mm]	[mm]				[mm]	[Nm]	[mm]	[kN]				[g]	
8	M16 x 1,5	10	24	9,8	27,5	20	19	90	1,5	1,5	1,2	0,5	22350.0601 / .0701	32	22350.0900
		15	24	9,8	27,5	20	19	90	1,5	1,5	1,2	0,5	22350.0602 / .0702	33	22350.0902
	M16	25	24	9,8	37,5	25	19	75	1,5	1,5	1,2	0,5	22350.0604 / .0704	46	22350.0904
		35	24	9,8	47,5	35	19	75	1,5	1,5	1,2	0,5	22350.0606 / .0706	55	22350.0906
10	M20 x 1,5	15	28	12,2	35,5	24	24	145	1,5	2,7	2,4	2,1	22350.0621 / .0721	70	22350.0910
		25	28	12,2	35,5	24	24	145	1,5	2,7	2,4	2,1	22350.0623 / .0723	73	22350.0912
	M20	35	28	12,2	46,0	29	24	130	1,5	2,7	2,4	2,1	22350.0625 / .0725	93	22350.0914
		50	28	12,2	65,0	49	24	130	1,5	2,7	2,4	2,1	22350.0627 / .0727	117	22350.0916
12	M24 x 1,5	15	32	14,7	35,5	24	27	220	1,5	3,5	3,2	2,8	22350.0631 / .0731	94	22350.0920
		25	32	14,7	36,5	24	27	220	1,5	3,5	3,2	2,8	22350.0633 / .0733	102	22350.0922
	M24	35	32	14,7	48,5	36	27	200	1,5	3,5	3,2	2,8	22350.0635 / .0735	119	22350.0924
		50	32	14,7	72,5	60	27	200	1,5	3,5	3,2	2,8	22350.0637 / .0737	164	22350.0926
16	M30 x 2	25	39	19,2	44,0	29	30	440	1,5	4,8	4,5	4,1	22350.0641 / .0741	163	22350.0930
	M30	50	39	19,2	66,0	44	30	400	1,5	4,8	4,5	4,1	22350.0643 / .0743	236	22350.0934
		75	39	19,2	96,0	74	30	400	1,5	4,8	4,5	4,1	22350.0645 / .0745	323	22350.0936
20	M36 x 2	50	43	26,0	70,0	55	36	440	1,5	10,0	8,5	6,5	22350.0673 / .0773	366	22350.0954
		75	43	26,0	95,0	80	36	440	1,5	10,0	8,5	6,5	22350.0675 / .0775	503	22350.0956

[1] for a 5-fold safety against breakage

2

APPLICATION EXAMPLE

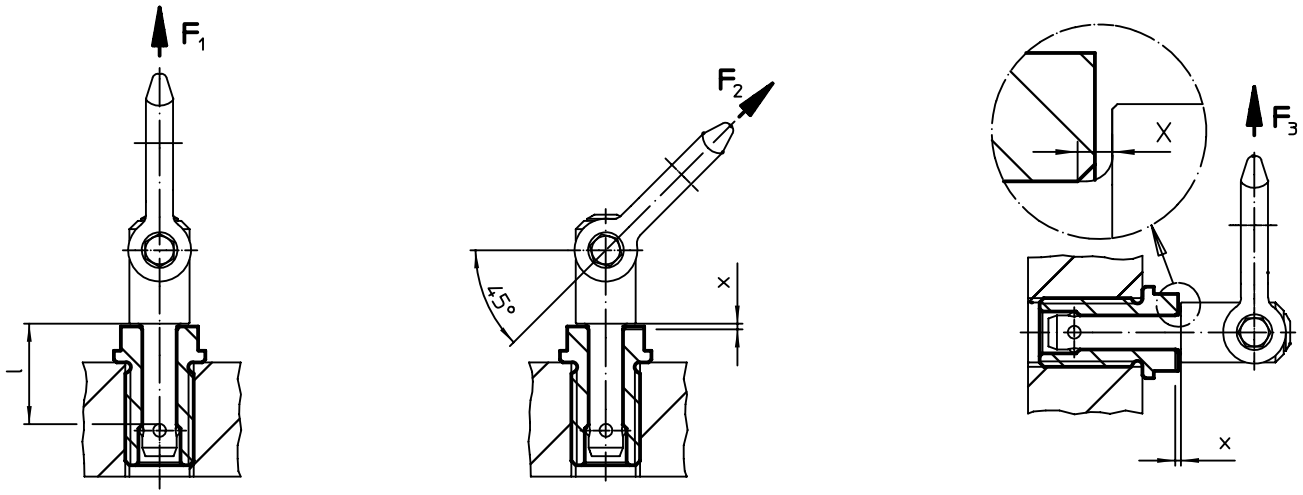

Locating Bushings, plain • for lifting pins

EH 22350.

PRODUCT DESCRIPTION

Locating bushings are used for quick and safe locating of lifting pins EH 22350. / EH 22351. This design is suitable for applications which require installation flush to the surface.
A face wrench is required for installation. As an accessory, we offer a standard adjustable face wrench, offset, and a face and socket wrench. In combination with a socket-wrench/ screwdriver, the face and socket wrench is especially suitable for use if space is restricted.
Corrosion and abrasion resistant.

Material

- Stainless steel 1.4542, precipitation-hardened

Assembly

Safe tolerances and consistent function.

Easily incorporated into different materials.
Bush can be easily installed via optional assembly tool.
Can be mounted in blind holes.
For thin-walled parts, lock nuts are used for assembly.

DRAWING

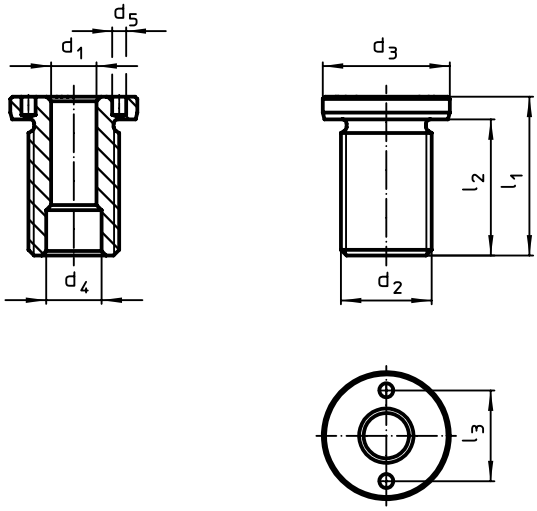

size M16/M16x1,5/M20 M20x1,5/M24x1,5/M30x2

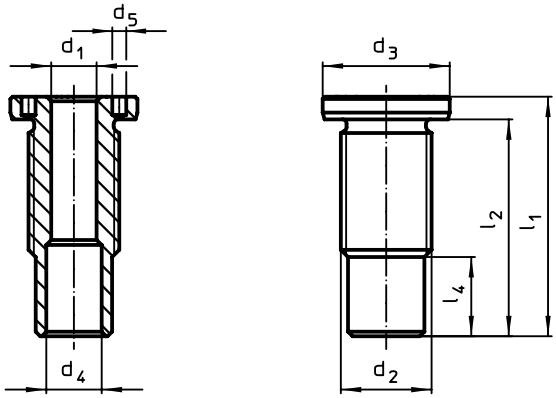

size M24/M30/M36x2

ORDER INFORMATION

Dimensions d_1 H11	Dimensions d_2	For nominal length l	Dimensions d_3 -0,2	d_4 +0,3	d_5 +0,1	l_1	l_2	l_3	l_4	Tightening torque max.	x[1]	Carrying force[1] F_1	F_2	F_3	For lifting pin		Art. No.
[mm]		[mm]	[mm]							[Nm]	[mm]	[kN]				[g]	
8	M16 x 1,5	10	24	9,8	3,1	25	20	16	–	75	1,5	1,5	1,2	0,5	22350.0601 / .0701	33	22350.1900
		15	24	9,8	3,1	25	20	16	–	75	1,5	1,5	1,2	0,5	22350.0602 / .0702	33	22350.1902
	M16	25	24	9,8	3,1	35	30	16	–	75	1,5	1,5	1,2	0,5	22350.0604 / .0704	33	22350.1904
		35	24	9,8	3,1	45	40	16	–	75	1,5	1,5	1,2	0,5	22350.0606 / .0706	33	22350.1906
10	M20 x 1,5	15	28	12,2	5,1	30	24	20	–	100	1,5	2,7	2,4	2,1	22350.0621 / .0721	70	22350.1910
		25	28	12,2	5,1	35	29	20	–	100	1,5	2,7	2,4	2,1	22350.0623 / .0723	70	22350.1912
	M20	35	28	12,2	5,1	45	39	20	–	100	1,5	2,7	2,4	2,1	22350.0625 / .0725	70	22350.1914
		50	28	12,2	5,1	60	54	20	–	100	1,5	2,7	2,4	2,1	22350.0627 / .0727	70	22350.1916
12	M24 x 1,5	15	32	14,7	5,1	32	26	22	–	150	1,5	3,5	3,2	2,8	22350.0631 / .0731	94	22350.1920
		25	32	14,7	5,1	40	34	22	–	150	1,5	3,5	3,2	2,8	22350.0633 / .0733	94	22350.1922
	M24	35	32	14,7	5,1	50	44	22	3,8	150	1,5	3,5	3,2	2,8	22350.0635 / .0735	94	22350.1924
		50	32	14,7	5,1	65	59	22	18,8	150	1,5	3,5	3,2	2,8	22350.0637 / .0737	94	22350.1926
16	M30 x 2	25	39	19,2	5,1	45	39	30	–	200	1,5	4,8	4,5	4,1	22350.0641 / .0741	163	22350.1930
	M30	50	39	19,2	5,1	65	59	30	6,0	200	1,5	4,8	4,5	4,1	22350.0643 / .0743	163	22350.1934
		75	39	19,2	5,1	90	84	30	31,0	200	1,5	4,8	4,5	4,1	22350.0645 / .0745	163	22350.1936
20	M36 x 2	50	43	26,0	5,1	70	63	30	3,5	200	1,5	10,0	8,5	6,5	22350.0673 / .0773	340	22350.1954
		75	43	26,0	5,1	95	88	30	28,5	200	1,5	10,0	8,5	6,5	22350.0675 / .0775	340	22350.1956

[1] for a 5-fold safety against breakage

2

ACCESSORIES

	Suitable for size d_1 [mm]	Pin spacing ±0,1 [mm]	Pin diameter -0,1 [mm]	Square drive [inch]	[g]	Art. No.
adjustable face wrench, offset						
	8/10/12	–	3		121	22350.1990
	16/20/25	–	5		309	22350.1991
face wrench (socket wrench insert)						
	8	16	3	1/2	116	22350.1995
	10	20	5	1/2	136	22350.1996
	12	22	5	1/2	185	22350.1997
	16/20	30	5	1/2	243	22350.1998

APPLICATION EXAMPLE

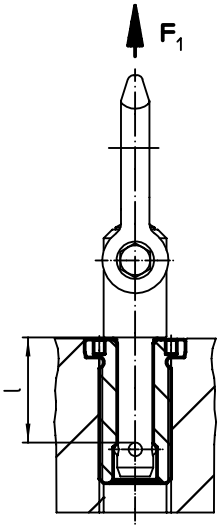

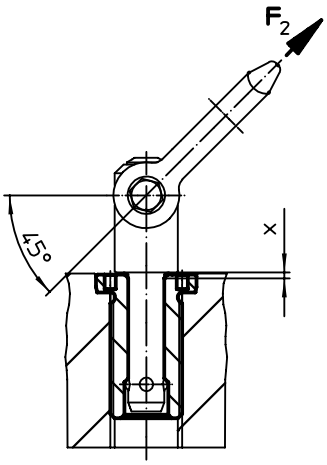

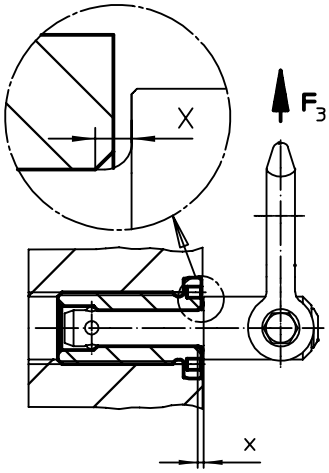

Locating Bushings with Seal, plain • for lifting pins

EH 22350.

PRODUCT DESCRIPTION

The seal prevents the penetration of liquid and dirt. The bushing is therefore especially suitable for use in the open air.
Locating bushings are used for quick and safe locating of lifting pins EH 22350. / EH 22351.
This design is suitable for applications which require installation flush to the surface.
A face wrench is required for installation. As an accessory, we offer a standard adjustable face wrench, offset, and a face and socket wrench. In combination with a socket-wrench/ screwdriver, the face and socket wrench is especially suitable for use if space is restricted.
Corrosion and abrasion resistant.

Material

Bushing
- Stainless steel 1.4542, precipitation-hardened

O-ring
- NBR

Spring
- Stainless steel

Assembly

Safe tolerances and consistent function.
Easily incorporated into different materials.
Bush can be easily installed via optional assembly tool.
Can be mounted in blind holes.
For thin-walled parts, lock nuts are used for assembly.

DRAWING

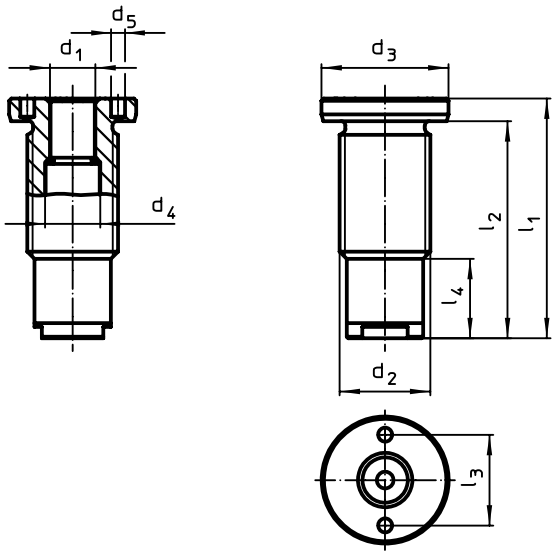

ORDER INFORMATION

Dimensions d_1 H11 [mm]	Dimensions d_2 [mm]	For nominal length l [mm]	Dimensions d_3 -0,2 [mm]	d_4 +0,3	d_5 +0,1	l_1	l_2	l_3	l_4	Tightening torque max. [Nm]	x[1] [mm]	Carrying force[1] F_1 [kN]	F_2	F_3	For lifting pin	[g]	Art. No.
8	**M16 x 1,5**	**10**	24	9,9	3,1	37,5	32,5	16	12,5	75	1,5	1,5	1,2	0,5	22350.0601 / .0701	40	**22350.1960**
10	**M20 x 1,5**	**15**	28	12,3	5,1	51,0	45,0	20	21,0	100	1,5	2,7	2,4	2,1	22350.0621 / .0721	82	**22350.1961**
12	**M24 x 1,5**	**15**	32	14,4	5,1	53,0	47,0	22	21,0	150	1,5	3,5	0,2	2,8	22350.0631 / .0731	125	**22350.1962**
16	**M30 x 2**	**25**	39	19,3	5,1	78,0	72,0	30	33,0	200	1,5	4,8	4,5	4,1	22350.0641 / .0741	253	**22350.1963**

[1] for a 5-fold safety against breakage

2

ACCESSORIES

	Suitable for size d_1 [mm]	Pin spacing ±0,1 [mm]	Pin diameter -0,1 [mm]	Square drive [inch]	[g]	Art. No.
adjustable face wrench, offset						
	8/10/12	–	3		121	22350.1990
	16/20/25	–	5		309	22350.1991
face wrench (socket wrench insert)						
	8	16	3	1/2	116	22350.1995
	10	20	5	1/2	136	22350.1996
	12	22	5	1/2	185	22350.1997
	16/20	30	5	1/2	243	22350.1998

APPLICATION EXAMPLE

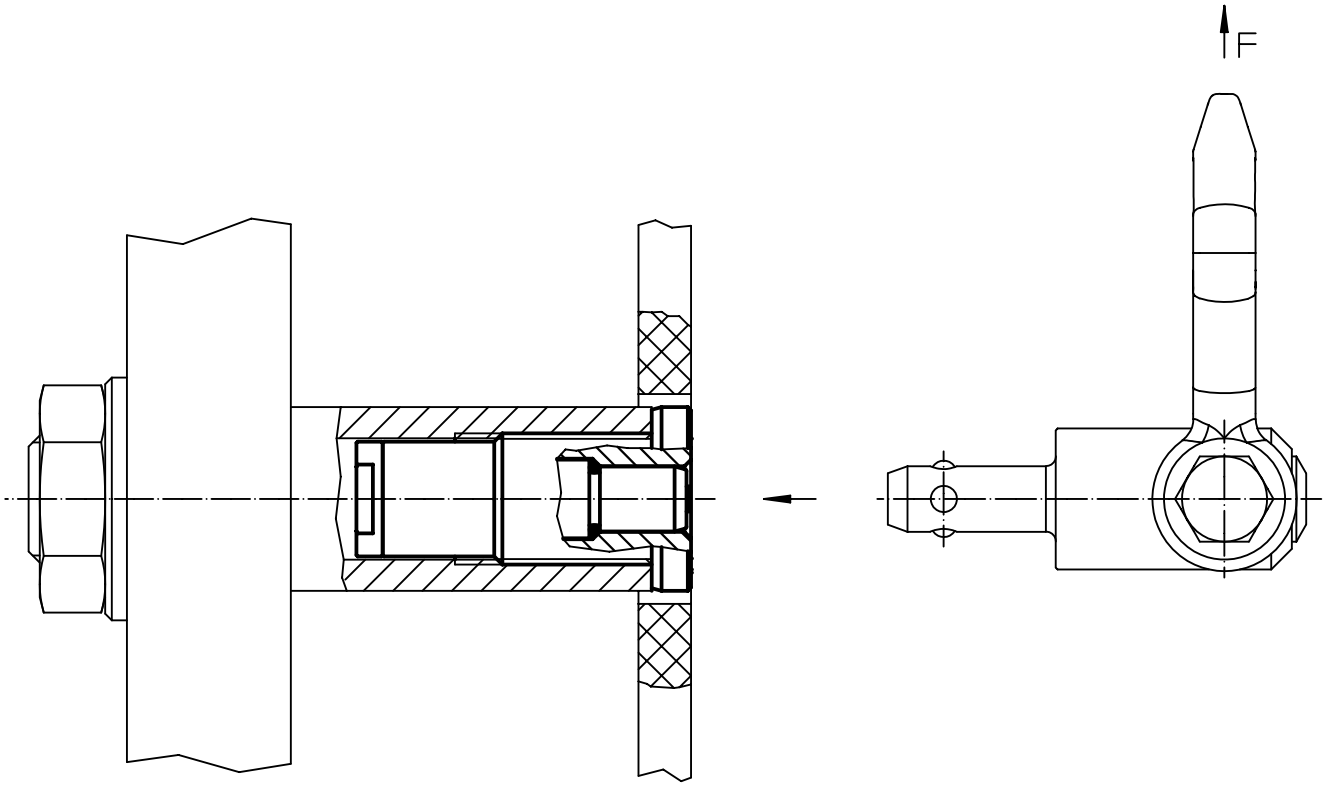

Lifting Pins • self-locking, with handle

EH 22351.

PRODUCT DESCRIPTION

The T-handled grip can be used to move or transport workpieces via hand, e.g. part finished components, workholding systems, speakers and other containers.
Corrosion and weathering resistant, thus also suitable for outdoor application. Very solid, precipitation-hardened pin with an extreme load capacity.

Material

Pin part
- Stainless steel 1.4542, precipitation-hardened

Handle
- Aluminium, blue anodised

Press button
- Aluminium, blue anodised

Spring
- Stainless steel

Assembly

Simple H11 boreholes are sufficient.
Each lifting pin contains an instruction manual with an EC Declaration of Conformity.

Operation

The balls are unlocked by pressing the knob.

MORE INFORMATION

Accessories

As accessories, we offer matching locating bushings for d_1 = 8, 10 and 12

Further products

Locating Bushings, for lifting pins . . . . → p. 191
Locating Bushings, plain, for lifting pins . . . . . → p. 193
Locating Bushings with Seal, plain, for lifting pins. . . . . → p. 195

DRAWING

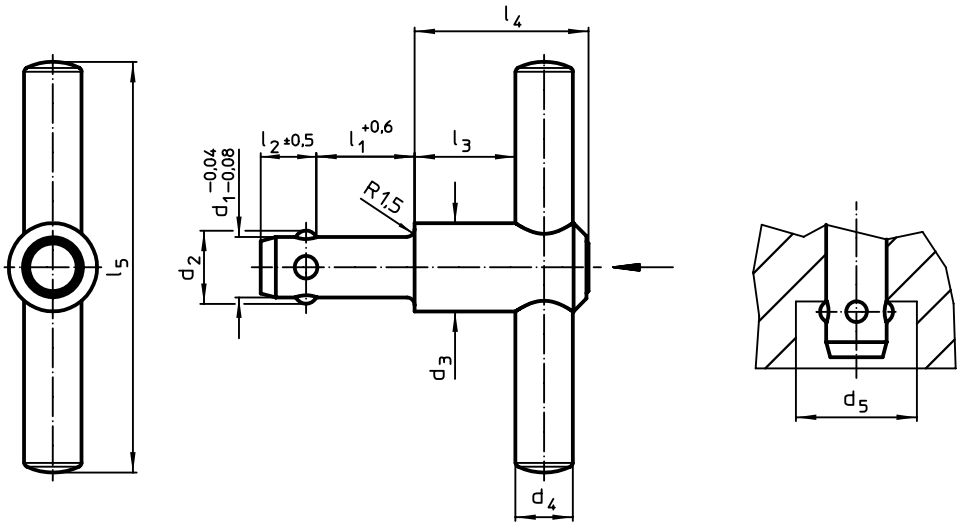

ORDER INFORMATION

Dimensions										Carrying force	Location hole			Art. No.
d_1 -0,04 -0,08	l_1 +0,6	d_2	d_3	d_4	d_5 min.	l_2	l_3	l_4	l_5	F_1	H11	max.		
[mm]										[N]	[mm]	[°C]	[g]	
8,0	**35**	9,35	21,5	14	9,85	8,75	18,7	36,0	100	500	8,0	250	141	22351.0005
8,3	**35**	9,65	21,5	14	10,05	8,75	18,7	36,0	100	500	8,3	250	142	22351.0010
10,0	**50**	11,70	21,5	14	12,20	10,20	18,7	36,5	100	500	10,0	250	159	22351.0015
12,0	**50**	14,20	21,5	14	14,70	11,00	18,7	36,5	100	500	12,0	250	177	22351.0020

THREADED LIFTING PINS

ORANGE IS THE NEW THREAD

Lifting elements that need to fit on threads often require additional connectors. Halder's latest new product helps save time: the threated lifting pins come with the mating thread directly built in. The different versions are fun to handle and offer tremendous savings potential. Better still, the release with the press of a button allows for installation with exceptional ease.

www.halder.com/
ThreadedLiftingPins-Video

Threaded Lifting Pins • self-locking

EH 22352.

PRODUCT DESCRIPTION

Heavy-duty lifting element for quick and easy use, with moveable shackle and locking stud to provide protection against unintentional unlocking. For lifting loads, the threaded lifting pin is inserted into a threaded hole. In contrast to a ringbolt, time-consuming screwing in and out is therefore unnecessary.
All versions are corrosion-protected. The version made from stainless steel is also resistant to corrosion and weathering, so it is also suitable for external use. In addition, the high-strength, precipitation-hardened pin makes extreme loads possible.

Material

Pin part
- Heat-treated steel, tempered, manganese phosphated
- Stainless steel 1.4542, precipitation-hardened

Press button
- Aluminium, orange, anodised

Threaded element
- Stainless steel 1.4542, precipitation-hardened

Shackle
- Heat-treated steel, tempered, manganese phosphated
- Stainless steel 1.4571

Spring
- Stainless steel

Assembly

For insertion into threads.
Each lifting pin contains an instruction manual with an EC Declaration of Conformity.

Operation

The threaded elements are unlocked by pressing the button.

MORE INFORMATION

Further products

Lifting Pins, self-locking . . . . . → p. 187
Lifting Pins, self-locking, stainless steel . . . . . → p. 189

DRAWING

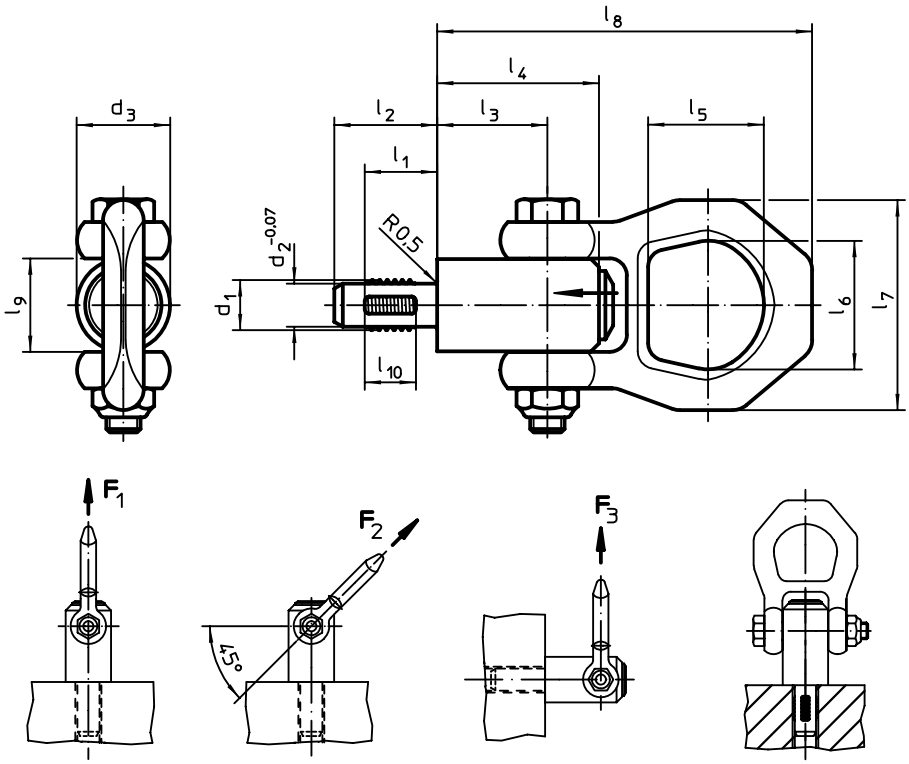

ORDER INFORMATION

Dimensions													Carrying force			Female thread	max.		Art. No.	
d_1	l_1	d_2 -0,07	d_3	l_2	l_3	l_4	l_5	l_6	l_7	l_8	l_9	l_{10}	F_1 [1]	F_2	F_3				heat-treated steel	stainless steel
[mm]													[kN]			[mm]	[°C]	[g]		
M10	**14**	8,35	21,5	20	25,7	36	27	30	49	87,5	21,5	10	3,9	1,5	1,5	M10	250	218	22352.0010	22352.1010
M12	**17**	10,07	21,5	24	25,7	36	27	30	49	87,5	21,5	12	6,2	2,5	2,3	M12	250	220	22352.0012	22352.1012
M16	**17**	13,80	21,5	24	25,7	36	27	30	49	87,5	21,5	12	8,4	4,5	4,2	M16	250	223	22352.0016	22352.1016

[1] for a 5-fold safety against breakage

2

APPLICATION EXAMPLE

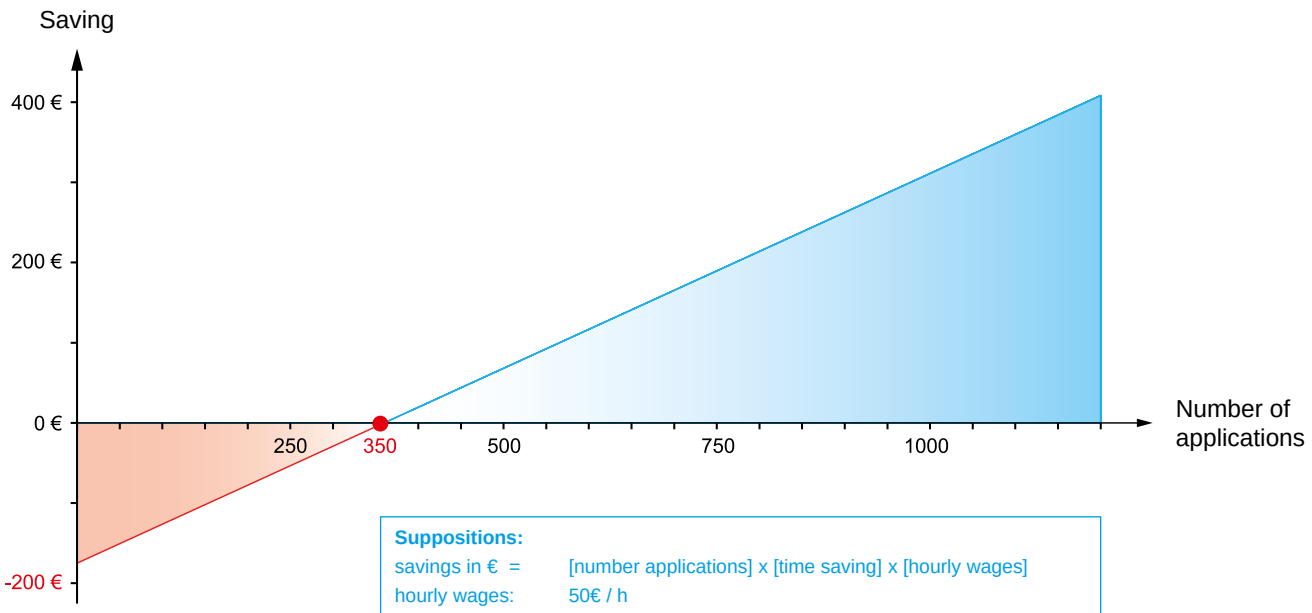

Suppositions:

savings in € =	[number applications] x [time saving] x [hourly wages]
hourly wages:	50€ / h
time saving:	35s / application

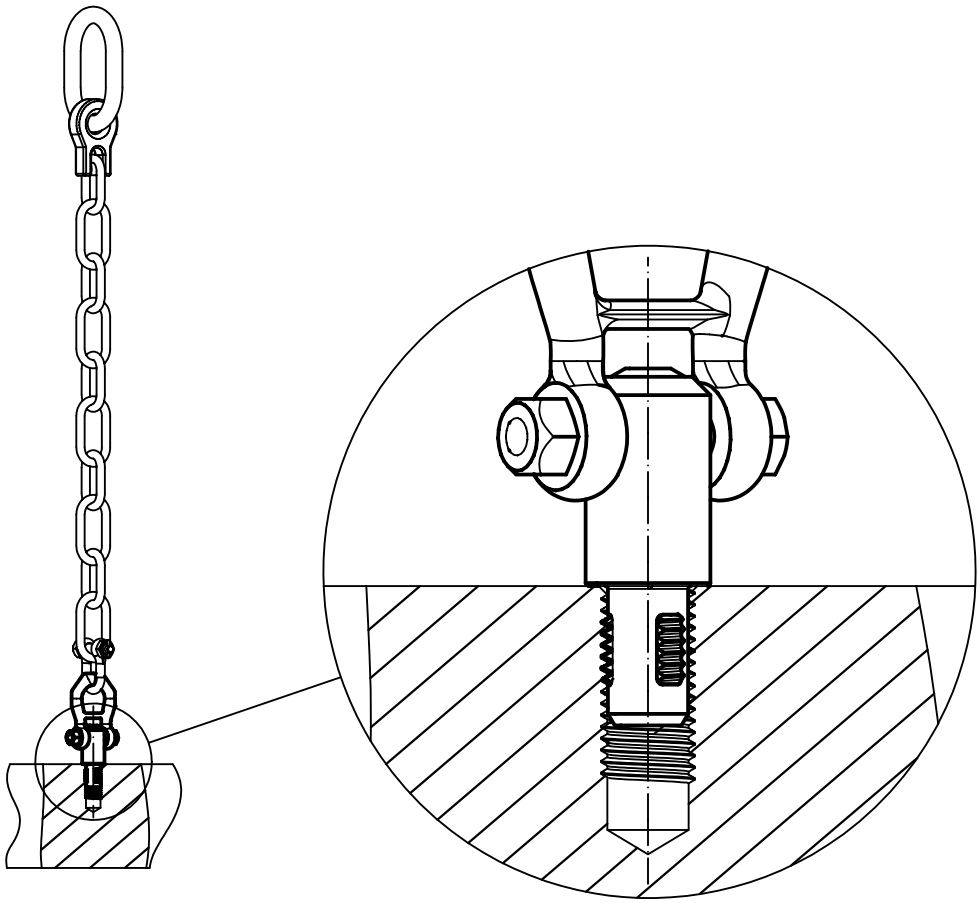

BALL LOCK PINS

LEADERS IN THE METRIC RANGE: THE CHOICE IS YOURS

We offer more than 2,000 different variants including matching accessories, the selection is enormous.

The applications the products can be used for are almost as manifold as our product selection. Fixing, locking, connecting, adjusting and quickly changing different positions. Better yet, all of these operations are self-locking and do not require additional tools. Other key benefits of ball lock pins are their unique ability to withstand enormous shearing loads and their perfect resistance to corrosion and, thus, wear.

www.halder.com/
BallLockPins-Video

2

Ball Lock Pins • self-locking, with T-handle

EH 22340. /EH 22350.

PRODUCT DESCRIPTION

For quick fastening, locking, adjusting, changing and securing. Quickly and easily unlockable for frequently repeated connections.
All versions are corrosion resistant. When using stainless steel 1.4542: high-strength, hardened, abrasion resistant pin with high load capacity.
Version with ergonomic grip.

Material

Pin part
- Stainless steel 1.4305
- Stainless steel 1.4542, precipitation-hardened

Handle
- Aluminium, black similar to RAL 9005

Press button
- Stainless steel, black

Spring
- Stainless steel

Operation

The balls are unlocked by pressing the knob.

Characteristic

Types from stainless steel 1.4542 with marking below the balls.

MORE INFORMATION

Notes

Special types on request.
- This product is also available in INCH dimensions.

Accessories

Can easily be fitted with retaining cable EH 22400.

Further products

Locating Bushings, for ball lock pins and socket pins . . . . . → p. 234
Locating Bushings, with flange, for ball lock pins and socket pins. . . . . → p. 236
Retaining Cables . . . . . → p. 237
Positioning Bushings, with collar, DIN 172 A . . . . . → p. 401
Positioning Bushings, without collar, DIN 179 A . . . . . → p. 404
Ball Lock Pins with T-Handle, single acting - complies with NASM / MS 17985. . . . . → p. 247

DRAWING

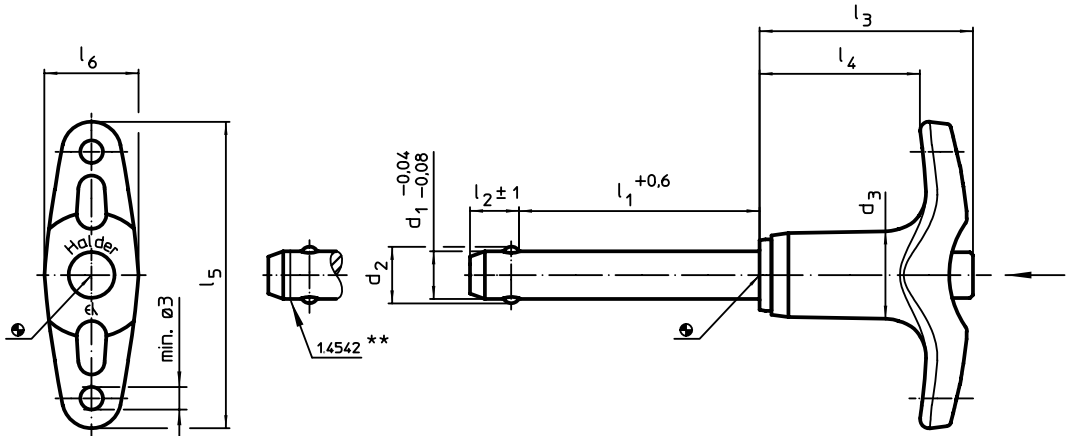

** Types from stainless steel 1.4542 with marking.

ORDER INFORMATION

Dimensions									Location hole H11				Stainless steel 1.4305		Stainless steel 1.4542, precipitation-hardened	
d_1 -0,04 -0,08	l_1 +0,6	d_2	d_3	l_2 ±1	l_3	l_4	l_5	l_6		min.	max.		Shearing resistance, double[1] min.	Art. No.	Shearing resistance, double[1] min.	Art. No.
[mm]									[mm]	[°C]		[g]	[kN]		[kN]	
5	10	5,5	11,8	6,0	31,6	24,1	45,2	12,7	5	-30	150	19	14	22340.0012	24	22350.0012
	15	5,5	11,8	6,0	31,6	24,1	45,2	12,7	5	-30	150	20	14	22340.0013	24	22350.0013
	20	5,5	11,8	6,0	31,6	24,1	45,2	12,7	5	-30	150	20	14	22340.0014	24	22350.0014
	25	5,5	11,8	6,0	31,6	24,1	45,2	12,7	5	-30	150	21	14	22340.0015	24	22350.0015
	30	5,5	11,8	6,0	31,6	24,1	45,2	12,7	5	-30	150	22	14	22340.0016	24	22350.0016
	35	5,5	11,8	6,0	31,6	24,1	45,2	12,7	5	-30	150	24	14	22340.0017	24	22350.0017
	40	5,5	11,8	6,0	31,6	24,1	45,2	12,7	5	-30	150	24	14	22340.0018	24	22350.0018
	45	5,5	11,8	6,0	31,6	24,1	45,2	12,7	5	-30	150	25	14	22340.0007	24	22350.0007
	50	5,5	11,8	6,0	31,6	24,1	45,2	12,7	5	-30	150	26	14	22340.0008	24	22350.0008
	60	5,5	11,8	6,0	31,6	24,1	45,2	12,7	5	-30	150	27	14	22340.0009	24	22350.0009
	70	5,5	11,8	6,0	31,6	24,1	45,2	12,7	5	-30	150	29	14	22340.0010	24	22350.0010
	80	5,5	11,8	6,0	31,6	24,1	45,2	12,7	5	-30	150	30	14	22340.0011	24	22350.0011

[1] shearing resistance similar to DIN 50141

→

Dimensions									Location hole H11				Stainless steel 1.4305		Stainless steel 1.4542, precipitation-hardened	
d_1 -0,04 -0,08	l_1 +0,6	d_2	d_3	l_2 ±1	l_3	l_4	l_5	l_6		min.	max.		Shearing resistance, double[1] min.	Art. No.	Shearing resistance, double[1] min.	Art. No.
[mm]									[mm]	[°C]		[g]	[kN]		[kN]	
6	10	7,0	11,8	7,0	31,6	24,1	45,2	12,7	6	-30	150	20	21	22340.0022	35	22350.0022
	15	7,0	11,8	7,0	31,6	24,1	45,2	12,7	6	-30	150	21	21	22340.0023	35	22350.0023
	20	7,0	11,8	7,0	31,6	24,1	45,2	12,7	6	-30	150	22	21	22340.0024	35	22350.0024
	25	7,0	11,8	7,0	31,6	24,1	45,2	12,7	6	-30	150	23	21	22340.0025	35	22350.0025
	30	7,0	11,8	7,0	31,6	24,1	45,2	12,7	6	-30	150	24	21	22340.0026	35	22350.0026
	35	7,0	11,8	7,0	31,6	24,1	45,2	12,7	6	-30	150	25	21	22340.0027	35	22350.0027
	40	7,0	11,8	7,0	31,6	24,1	45,2	12,7	6	-30	150	26	21	22340.0028	35	22350.0028
	45	7,0	11,8	7,0	31,6	24,1	45,2	12,7	6	-30	150	27	21	22340.0029	35	22350.0029
	50	7,0	11,8	7,0	31,6	24,1	45,2	12,7	6	-30	150	28	21	22340.0030	35	22350.0030
	60	7,0	11,8	7,0	31,6	24,1	45,2	12,7	6	-30	150	31	21	22340.0019	35	22350.0019
	70	7,0	11,8	7,0	31,6	24,1	45,2	12,7	6	-30	150	33	21	22340.0020	35	22350.0020
	80	7,0	11,8	7,0	31,6	24,1	45,2	12,7	6	-30	150	35	21	22340.0021	35	22350.0021
8	10	9,5	14,7	8,2	35,8	26,9	51,5	15,8	8	-30	150	33	38	22340.0032	63	22350.0032
	15	9,5	14,7	8,2	35,8	26,9	51,5	15,8	8	-30	150	35	38	22340.0033	63	22350.0033
	20	9,5	14,7	8,2	35,8	26,9	51,5	15,8	8	-30	150	37	38	22340.0034	63	22350.0034
	25	9,5	14,7	8,2	35,8	26,9	51,5	15,8	8	-30	150	39	38	22340.0035	63	22350.0035
	30	9,5	14,7	8,2	35,8	26,9	51,5	15,8	8	-30	150	41	38	22340.0036	63	22350.0036
	35	9,5	14,7	8,2	35,8	26,9	51,5	15,8	8	-30	150	43	38	22340.0037	63	22350.0037
	40	9,5	14,7	8,2	35,8	26,9	51,5	15,8	8	-30	150	44	38	22340.0038	63	22350.0038
	45	9,5	14,7	8,2	35,8	26,9	51,5	15,8	8	-30	150	46	38	22340.0039	63	22350.0039
	50	9,5	14,7	8,2	35,8	26,9	51,5	15,8	8	-30	150	48	38	22340.0040	63	22350.0040
	60	9,5	14,7	8,2	35,8	26,9	51,5	15,8	8	-30	150	52	38	22340.0031	63	22350.0031
	70	9,5	14,7	8,2	35,8	26,9	51,5	15,8	8	-30	150	56	38	22340.0041	63	22350.0041
	80	9,5	14,7	8,2	35,8	26,9	51,5	15,8	8	-30	150	60	38	22340.0042	63	22350.0042
	90	9,5	14,7	8,2	35,8	26,9	51,5	15,8	8	-30	150	63	38	22340.0043	63	22350.0043
	100	9,5	14,7	8,2	35,8	26,9	51,5	15,8	8	-30	150	67	38	22340.0051	63	22350.0051
10	15	12,0	14,7	9,6	35,8	26,9	51,5	15,8	10	-30	150	40	60	22340.0059	100	22350.0059
	20	12,0	14,7	9,6	35,8	26,9	51,5	15,8	10	-30	150	44	60	22340.0044	100	22350.0044
	25	12,0	14,7	9,6	35,8	26,9	51,5	15,8	10	-30	150	47	60	22340.0045	100	22350.0045
	30	12,0	14,7	9,6	35,8	26,9	51,5	15,8	10	-30	150	49	60	22340.0046	100	22350.0046
	35	12,0	14,7	9,6	35,8	26,9	51,5	15,8	10	-30	150	52	60	22340.0047	100	22350.0047
	40	12,0	14,7	9,6	35,8	26,9	51,5	15,8	10	-30	150	55	60	22340.0048	100	22350.0048
	45	12,0	14,7	9,6	35,8	26,9	51,5	15,8	10	-30	150	58	60	22340.0049	100	22350.0049
	50	12,0	14,7	9,6	35,8	26,9	51,5	15,8	10	-30	150	61	60	22340.0050	100	22350.0050
	60	12,0	14,7	9,6	35,8	26,9	51,5	15,8	10	-30	150	67	60	22340.0052	100	22350.0052
	70	12,0	14,7	9,6	35,8	26,9	51,5	15,8	10	-30	150	73	60	22340.0053	100	22350.0053
	80	12,0	14,7	9,6	35,8	26,9	51,5	15,8	10	-30	150	79	60	22340.0054	100	22350.0054
	90	12,0	14,7	9,6	35,8	26,9	51,5	15,8	10	-30	150	85	60	22340.0055	100	22350.0055
	100	12,0	14,7	9,6	35,8	26,9	51,5	15,8	10	-30	150	91	60	22340.0056	100	22350.0056
	110	12,0	14,7	9,6	35,8	26,9	51,5	15,8	10	-30	150	97	60	22340.0057	100	22350.0057
	120	12,0	14,7	9,6	35,8	26,9	51,5	15,8	10	-30	150	103	60	22340.0058	100	22350.0058
12	20	14,5	18,2	10,6	35,1	25,3	59,1	20,2	12	-30	150	68	87	22340.0064	144	22350.0064
	25	14,5	18,2	10,6	35,1	25,3	59,1	20,2	12	-30	150	73	87	22340.0065	144	22350.0065
	30	14,5	18,2	10,6	35,1	25,3	59,1	20,2	12	-30	150	77	87	22340.0066	144	22350.0066
	35	14,5	18,2	10,6	35,1	25,3	59,1	20,2	12	-30	150	81	87	22340.0067	144	22350.0067
	40	14,5	18,2	10,6	35,1	25,3	59,1	20,2	12	-30	150	86	87	22340.0068	144	22350.0068
	45	14,5	18,2	10,6	35,1	25,3	59,1	20,2	12	-30	150	90	87	22340.0069	144	22350.0069
	50	14,5	18,2	10,6	35,1	25,3	59,1	20,2	12	-30	150	94	87	22340.0070	144	22350.0070
	60	14,5	18,2	10,6	35,1	25,3	59,1	20,2	12	-30	150	103	87	22340.0072	144	22350.0072
	70	14,5	18,2	10,6	35,1	25,3	59,1	20,2	12	-30	150	111	87	22340.0074	144	22350.0074
	80	14,5	18,2	10,6	35,1	25,3	59,1	20,2	12	-30	150	119	87	22340.0076	144	22350.0076
	90	14,5	18,2	10,6	35,1	25,3	59,1	20,2	12	-30	150	127	87	22340.0060	144	22350.0060
	100	14,5	18,2	10,6	35,1	25,3	59,1	20,2	12	-30	150	136	87	22340.0061	144	22350.0061
	110	14,5	18,2	10,6	35,1	25,3	59,1	20,2	12	-30	150	144	87	22340.0062	144	22350.0062
	120	14,5	18,2	10,6	35,1	25,3	59,1	20,2	12	-30	150	153	87	22340.0063	144	22350.0063

[1] shearing resistance similar to DIN 50141

Dimensions									Location hole H11				Stainless steel 1.4305		Stainless steel 1.4542, precipitation-hardened	
d_1 -0,04 -0,08	l_1 +0,6	d_2	d_3	l_2 ±1	l_3	l_4	l_5	l_6		min.	max.		Shearing resistance, double[1] min.	Art. No.	Shearing resistance, double[1] min.	Art. No.
[mm]									[mm]	[°C]		[g]	[kN]		[kN]	
16	30	19,0	23,4	14,0	42,2	29,8	74,8	24,7	16	-30	150	150	155	22340.0071	257	22350.0071
	35	19,0	23,4	14,0	42,2	29,8	74,8	24,7	16	-30	150	157	155	22340.0073	257	22350.0073
	40	19,0	23,4	14,0	42,2	29,8	74,8	24,7	16	-30	150	165	155	22340.0075	257	22350.0075
	45	19,0	23,4	14,0	42,2	29,8	74,8	24,7	16	-30	150	173	155	22340.0077	257	22350.0077
	50	19,0	23,4	14,0	42,2	29,8	74,8	24,7	16	-30	150	180	155	22340.0078	257	22350.0078
	60	19,0	23,4	14,0	42,2	29,8	74,8	24,7	16	-30	150	196	155	22340.0079	257	22350.0079
	70	19,0	23,4	14,0	42,2	29,8	74,8	24,7	16	-30	150	211	155	22340.0080	257	22350.0080
	80	19,0	23,4	14,0	42,2	29,8	74,8	24,7	16	-30	150	226	155	22340.0081	257	22350.0081
	90	19,0	23,4	14,0	42,2	29,8	74,8	24,7	16	-30	150	242	155	22340.0082	257	22350.0082
	100	19,0	23,4	14,0	42,2	29,8	74,8	24,7	16	-30	150	257	155	22340.0083	257	22350.0083
	110	19,0	23,4	14,0	42,2	29,8	74,8	24,7	16	-30	150	272	155	22340.0084	257	22350.0084
	120	19,0	23,4	14,0	42,2	29,8	74,8	24,7	16	-30	150	288	155	22340.0085	257	22350.0085
	130	19,0	23,4	14,0	42,2	29,8	74,8	24,7	16	-30	150	303	155	22340.0086	257	22350.0086
	140	19,0	23,4	14,0	42,2	29,8	74,8	24,7	16	-30	150	319	155	22340.0087	257	22350.0087
	150	19,0	23,4	14,0	42,2	29,8	74,8	24,7	16	-30	150	334	155	22340.0088	257	22350.0088
20	50	24,8	23,4	17,0	43,1	29,8	74,8	24,7	20	-30	150	241	244	22340.0089	403	22350.0089
	60	24,8	23,4	17,0	43,1	29,8	74,8	24,7	20	-30	150	265	244	22340.0090	403	22350.0090
	70	24,8	23,4	17,0	43,1	29,8	74,8	24,7	20	-30	150	289	244	22340.0091	403	22350.0091
	80	24,8	23,4	17,0	43,1	29,8	74,8	24,7	20	-30	150	313	244	22340.0092	403	22350.0092
	90	24,8	23,4	17,0	43,1	29,8	74,8	24,7	20	-30	150	337	244	22340.0093	403	22350.0093
	100	24,8	23,4	17,0	43,1	29,8	74,8	24,7	20	-30	150	361	244	22340.0094	403	22350.0094
	110	24,8	23,4	17,0	43,1	29,8	74,8	24,7	20	-30	150	385	244	22340.0095	403	22350.0095
	120	24,8	23,4	17,0	43,1	29,8	74,8	24,7	20	-30	150	409	244	22340.0096	403	22350.0096
	130	24,8	23,4	17,0	43,1	29,8	74,8	24,7	20	-30	150	433	244	22340.0097	403	22350.0097
	140	24,8	23,4	17,0	43,1	29,8	74,8	24,7	20	-30	150	457	244	22340.0098	403	22350.0098
	150	24,8	23,4	17,0	43,1	29,8	74,8	24,7	20	-30	150	481	244	22340.0099	403	22350.0099
25	50	31,0	30,4	22,0	54,8	37,5	88,7	33,2	25	-30	150	447	386	22340.0100	631	22350.0100
	60	31,0	30,4	22,0	54,8	37,5	88,7	33,2	25	-30	150	484	386	22340.0101	631	22350.0101
	70	31,0	30,4	22,0	54,8	37,5	88,7	33,2	25	-30	150	522	386	22340.0102	631	22350.0102
	80	31,0	30,4	22,0	54,8	37,5	88,7	33,2	25	-30	150	560	386	22340.0103	631	22350.0103
	90	31,0	30,4	22,0	54,8	37,5	88,7	33,2	25	-30	150	598	386	22340.0104	631	22350.0104
	100	31,0	30,4	22,0	54,8	37,5	88,7	33,2	25	-30	150	636	386	22340.0001	631	22350.0001
	110	31,0	30,4	22,0	54,8	37,5	88,7	33,2	25	-30	150	674	386	22340.0002	631	22350.0002
	120	31,0	30,4	22,0	54,8	37,5	88,7	33,2	25	-30	150	712	386	22340.0003	631	22350.0003
	130	31,0	30,4	22,0	54,8	37,5	88,7	33,2	25	-30	150	750	386	22340.0004	631	22350.0004
	140	31,0	30,4	22,0	54,8	37,5	88,7	33,2	25	-30	150	788	386	22340.0005	631	22350.0005
	150	31,0	30,4	22,0	54,8	37,5	88,7	33,2	25	-30	150	825	386	22340.0006	631	22350.0006

[1] shearing resistance similar to DIN 50141

APPLICATION EXAMPLE

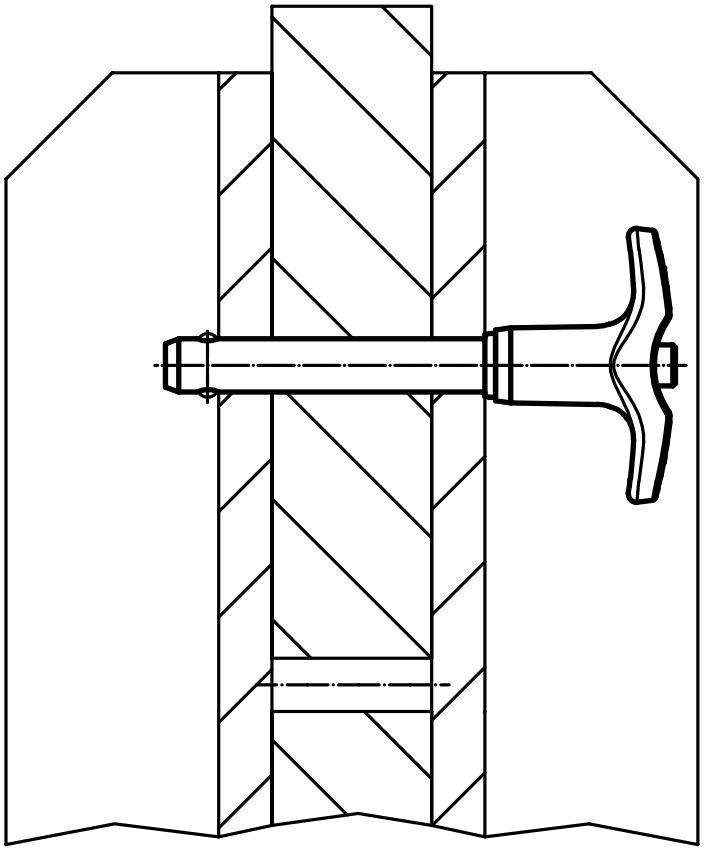

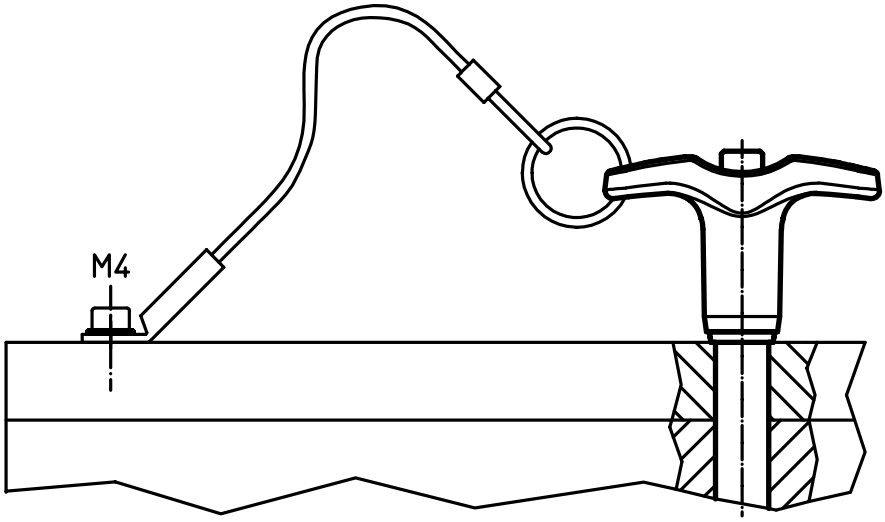

2

Ball Lock Pins • self-locking, with L-handle

EH 22340. /EH 22350.

PRODUCT DESCRIPTION

For quick fastening, locking, adjusting, changing and securing. Quickly and easily unlockable for frequently repeated connections.
All versions are corrosion resistant. When using stainless steel 1.4542: high-strength, hardened, abrasion resistant pin with high load capacity.
Version with ergonomic grip.

Material

Pin part
- Stainless steel 1.4305
- Stainless steel 1.4542, precipitation-hardened

Handle
- Aluminium, black similar to RAL 9005

Press button
- Stainless steel, black

Spring
- Stainless steel

Operation

The balls are unlocked by pressing the knob.

Characteristic

Types from stainless steel 1.4542 with marking below the balls.

MORE INFORMATION

Notes

Special types on request.
- This product is also available in INCH dimensions.

Accessories

Can easily be fitted with retaining cable EH 22400.

Further products

Locating Bushings, for ball lock pins and socket pins . . . . . → p. 234
Locating Bushings, with flange, for ball lock pins and socket pins. . . . . → p. 236
Retaining Cables . . . . . → p. 237
Positioning Bushings, with collar, DIN 172 A . . . . . → p. 401
Positioning Bushings, without collar, DIN 179 A . . . . . → p. 404
Ball Lock Pins with L-Handle, single acting - complies with NASM / MS 17986. . . . . → p. 250

DRAWING

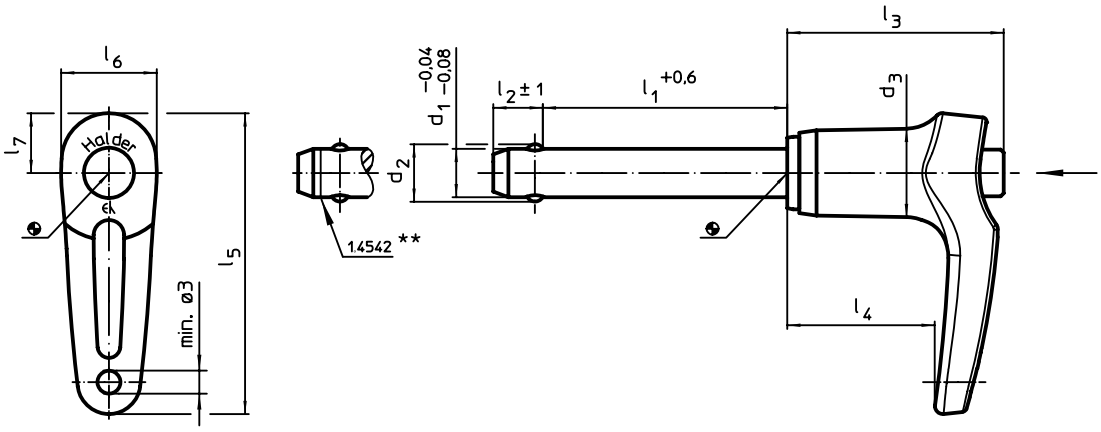

** Types from stainless steel 1.4542 with marking.

ORDER INFORMATION

Dimensions										Location hole H11				Stainless steel 1.4305		Stainless steel 1.4542, precipitation-hardened	
d_1 -0,04 -0,08	l_1 +0,6	d_2	d_3	l_2 ±1	l_3	l_4	l_5	l_6	l_7		min.	max.		Shearing resistance, double[1] min.	Art. No.	Shearing resistance, double[1] min.	Art. No.
[mm]										[mm]	[°C]		[g]	[kN]		[kN]	
5	10	5,5	11,8	6,0	31,6	21,9	43,8	12,6	8,5	5	-30	150	20	14	22340.0112	24	22350.0112
	15	5,5	11,8	6,0	31,6	21,9	43,8	12,6	8,5	5	-30	150	21	14	22340.0113	24	22350.0113
	20	5,5	11,8	6,0	31,6	21,9	43,8	12,6	8,5	5	-30	150	21	14	22340.0114	24	22350.0114
	25	5,5	11,8	6,0	31,6	21,9	43,8	12,6	8,5	5	-30	150	22	14	22340.0115	24	22350.0115
	30	5,5	11,8	6,0	31,6	21,9	43,8	12,6	8,5	5	-30	150	23	14	22340.0116	24	22350.0116
	35	5,5	11,8	6,0	31,6	21,9	43,8	12,6	8,5	5	-30	150	18	14	22340.0117	24	22350.0117
	40	5,5	11,8	6,0	31,6	21,9	43,8	12,6	8,5	5	-30	150	19	14	22340.0118	24	22350.0118
	45	5,5	11,8	6,0	31,6	21,9	43,8	12,6	8,5	5	-30	150	20	14	22340.0107	24	22350.0107
	50	5,5	11,8	6,0	31,6	21,9	43,8	12,6	8,5	5	-30	150	21	14	22340.0108	24	22350.0108
	60	5,5	11,8	6,0	31,6	21,9	43,8	12,6	8,5	5	-30	150	22	14	22340.0109	24	22350.0109
	70	5,5	11,8	6,0	31,6	21,9	43,8	12,6	8,5	5	-30	150	24	14	22340.0110	24	22350.0110
	80	5,5	11,8	6,0	31,6	21,9	43,8	12,6	8,5	5	-30	150	25	14	22340.0111	24	22350.0111

[1] shearing resistance similar to DIN 50141 →

Dimensions										Location hole H11				Stainless steel 1.4305		Stainless steel 1.4542, precipitation-hardened	
d_1 -0,04 -0,08	l_1 +0,6	d_2	d_3	l_2 ±1	l_3	l_4	l_5	l_6	l_7		min.	max.		Shearing resistance, double[1] min.	Art. No.	Shearing resistance, double[1] min.	Art. No.
[mm]										[mm]	[°C]		[g]	[kN]		[kN]	
6	10	7,0	11,8	7,0	31,6	21,9	43,8	12,6	8,5	6	-30	150	21	21	22340.0122	35	22350.0122
	15	7,0	11,8	7,0	31,6	21,9	43,8	12,6	8,5	6	-30	150	22	21	22340.0123	35	22350.0123
	20	7,0	11,8	7,0	31,6	21,9	43,8	12,6	8,5	6	-30	150	23	21	22340.0124	35	22350.0124
	25	7,0	11,8	7,0	31,6	21,9	43,8	12,6	8,5	6	-30	150	24	21	22340.0125	35	22350.0125
	30	7,0	11,8	7,0	31,6	21,9	43,8	12,6	8,5	6	-30	150	25	21	22340.0126	35	22350.0126
	35	7,0	11,8	7,0	31,6	21,9	43,8	12,6	8,5	6	-30	150	26	21	22340.0127	35	22350.0127
	40	7,0	11,8	7,0	31,6	21,9	43,8	12,6	8,5	6	-30	150	27	21	22340.0128	35	22350.0128
	45	7,0	11,8	7,0	31,6	21,9	43,8	12,6	8,5	6	-30	150	28	21	22340.0129	35	22350.0129
	50	7,0	11,8	7,0	31,6	21,9	43,8	12,6	8,5	6	-30	150	29	21	22340.0130	35	22350.0130
	60	7,0	11,8	7,0	31,6	21,9	43,8	12,6	8,5	6	-30	150	26	21	22340.0119	35	22350.0119
	70	7,0	11,8	7,0	31,6	21,9	43,8	12,6	8,5	6	-30	150	28	21	22340.0120	35	22350.0120
	80	7,0	11,8	7,0	31,6	21,9	43,8	12,6	8,5	6	-30	150	30	21	22340.0121	35	22350.0121
8	10	9,5	14,7	8,2	35,8	24,4	49,7	15,8	9,9	8	-30	150	33	38	22340.0132	63	22350.0132
	15	9,5	14,7	8,2	35,8	24,4	49,7	15,8	9,9	8	-30	150	35	38	22340.0133	63	22350.0133
	20	9,5	14,7	8,2	35,8	24,4	49,7	15,8	9,9	8	-30	150	37	38	22340.0134	63	22350.0134
	25	9,5	14,7	8,2	35,8	24,4	49,7	15,8	9,9	8	-30	150	39	38	22340.0135	63	22350.0135
	30	9,5	14,7	8,2	35,8	24,4	49,7	15,8	9,9	8	-30	150	41	38	22340.0136	63	22350.0136
	35	9,5	14,7	8,2	35,8	24,4	49,7	15,8	9,9	8	-30	150	43	38	22340.0137	63	22350.0137
	40	9,5	14,7	8,2	35,8	24,4	49,7	15,8	9,9	8	-30	150	45	38	22340.0138	63	22350.0138
	45	9,5	14,7	8,2	35,8	24,4	49,7	15,8	9,9	8	-30	150	46	38	22340.0139	63	22350.0139
	50	9,5	14,7	8,2	35,8	24,4	49,7	15,8	9,9	8	-30	150	48	38	22340.0140	63	22350.0140
	60	9,5	14,7	8,2	35,8	24,4	49,7	15,8	9,9	8	-30	150	52	38	22340.0131	63	22350.0131
	70	9,5	14,7	8,2	35,8	24,4	49,7	15,8	9,9	8	-30	150	56	38	22340.0141	63	22350.0141
	80	9,5	14,7	8,2	35,8	24,4	49,7	15,8	9,9	8	-30	150	60	38	22340.0142	63	22350.0142
	90	9,5	14,7	8,2	35,8	24,4	49,7	15,8	9,9	8	-30	150	64	38	22340.0143	63	22350.0143
	100	9,5	14,7	8,2	35,8	24,4	49,7	15,8	9,9	8	-30	150	67	38	22340.0151	63	22350.0151
10	15	12,0	14,7	9,6	35,8	24,4	49,7	15,8	9,9	10	-30	150	42	60	22340.0159	100	22350.0159
	20	12,0	14,7	9,6	35,8	24,4	49,7	15,8	9,9	10	-30	150	44	60	22340.0144	100	22350.0144
	25	12,0	14,7	9,6	35,8	24,4	49,7	15,8	9,9	10	-30	150	47	60	22340.0145	100	22350.0145
	30	12,0	14,7	9,6	35,8	24,4	49,7	15,8	9,9	10	-30	150	50	60	22340.0146	100	22350.0146
	35	12,0	14,7	9,6	35,8	24,4	49,7	15,8	9,9	10	-30	150	53	60	22340.0147	100	22350.0147
	40	12,0	14,7	9,6	35,8	24,4	49,7	15,8	9,9	10	-30	150	56	60	22340.0148	100	22350.0148
	45	12,0	14,7	9,6	35,8	24,4	49,7	15,8	9,9	10	-30	150	58	60	22340.0149	100	22350.0149
	50	12,0	14,7	9,6	35,8	24,4	49,7	15,8	9,9	10	-30	150	62	60	22340.0150	100	22350.0150
	60	12,0	14,7	9,6	35,8	24,4	49,7	15,8	9,9	10	-30	150	67	60	22340.0152	100	22350.0152
	70	12,0	14,7	9,6	35,8	24,4	49,7	15,8	9,9	10	-30	150	74	60	22340.0153	100	22350.0153
	80	12,0	14,7	9,6	35,8	24,4	49,7	15,8	9,9	10	-30	150	80	60	22340.0154	100	22350.0154
	90	12,0	14,7	9,6	35,8	24,4	49,7	15,8	9,9	10	-30	150	86	60	22340.0155	100	22350.0155
	100	12,0	14,7	9,6	35,8	24,4	49,7	15,8	9,9	10	-30	150	92	60	22340.0156	100	22350.0156
	110	12,0	14,7	9,6	35,8	24,4	49,7	15,8	9,9	10	-30	150	98	60	22340.0157	100	22350.0157
	120	12,0	14,7	9,6	35,8	24,4	49,7	15,8	9,9	10	-30	150	104	60	22340.0158	100	22350.0158
12	20	14,5	18,2	10,6	35,1	22,7	57,1	20,2	12,6	12	-30	150	69	87	22340.0164	144	22350.0164
	25	14,5	18,2	10,6	35,1	22,7	57,1	20,2	12,6	12	-30	150	73	87	22340.0165	144	22350.0165
	30	14,5	18,2	10,6	35,1	22,7	57,1	20,2	12,6	12	-30	150	77	87	22340.0166	144	22350.0166
	35	14,5	18,2	10,6	35,1	22,7	57,1	20,2	12,6	12	-30	150	82	87	22340.0167	144	22350.0167
	40	14,5	18,2	10,6	35,1	22,7	57,1	20,2	12,6	12	-30	150	86	87	22340.0168	144	22350.0168
	45	14,5	18,2	10,6	35,1	22,7	57,1	20,2	12,6	12	-30	150	90	87	22340.0169	144	22350.0169
	50	14,5	18,2	10,6	35,1	22,7	57,1	20,2	12,6	12	-30	150	94	87	22340.0170	144	22350.0170
	60	14,5	18,2	10,6	35,1	22,7	57,1	20,2	12,6	12	-30	150	103	87	22340.0172	144	22350.0172
	70	14,5	18,2	10,6	35,1	22,7	57,1	20,2	12,6	12	-30	150	111	87	22340.0174	144	22350.0174
	80	14,5	18,2	10,6	35,1	22,7	57,1	20,2	12,6	12	-30	150	120	87	22340.0176	144	22350.0176
	90	14,5	18,2	10,6	35,1	22,7	57,1	20,2	12,6	12	-30	150	128	87	22340.0160	144	22350.0160
	100	14,5	18,2	10,6	35,1	22,7	57,1	20,2	12,6	12	-30	150	137	87	22340.0161	144	22350.0161
	110	14,5	18,2	10,6	35,1	22,7	57,1	20,2	12,6	12	-30	150	145	87	22340.0162	144	22350.0162
	120	14,5	18,2	10,6	35,1	22,7	57,1	20,2	12,6	12	-30	150	154	87	22340.0163	144	22350.0163

[1] shearing resistance similar to DIN 50141

Dimensions										Location hole H11				Stainless steel 1.4305		Stainless steel 1.4542, precipitation-hardened	
d_1 -0,04 -0,08	l_1 +0,6	d_2	d_3	l_2 ±1	l_3	l_4	l_5	l_6	l_7		min.	max.		Shearing resistance, double[1] min.	Art. No.	Shearing resistance, double[1] min.	Art. No.
[mm]										[mm]	[°C]		[g]	[kN]		[kN]	
	30	19,0	23,4	14,0	42,2	27,3	67,6	24,7	15,1	16	-30	150	149	155	22340.0171	257	22350.0171
	35	19,0	23,4	14,0	42,2	27,3	67,6	24,7	15,1	16	-30	150	157	155	22340.0173	257	22350.0173
	40	19,0	23,4	14,0	42,2	27,3	67,6	24,7	15,1	16	-30	150	165	155	22340.0175	257	22350.0175
	45	19,0	23,4	14,0	42,2	27,3	67,6	24,7	15,1	16	-30	150	172	155	22340.0177	257	22350.0177
	50	19,0	23,4	14,0	42,2	27,3	67,6	24,7	15,1	16	-30	150	180	155	22340.0178	257	22350.0178
	60	19,0	23,4	14,0	42,2	27,3	67,6	24,7	15,1	16	-30	150	195	155	22340.0179	257	22350.0179
	70	19,0	23,4	14,0	42,2	27,3	67,6	24,7	15,1	16	-30	150	211	155	22340.0180	257	22350.0180
16	80	19,0	23,4	14,0	42,2	27,3	67,6	24,7	15,1	16	-30	150	226	155	22340.0181	257	22350.0181
	90	19,0	23,4	14,0	42,2	27,3	67,6	24,7	15,1	16	-30	150	241	155	22340.0182	257	22350.0182
	100	19,0	23,4	14,0	42,2	27,3	67,6	24,7	15,1	16	-30	150	257	155	22340.0183	257	22350.0183
	110	19,0	23,4	14,0	42,2	27,3	67,6	24,7	15,1	16	-30	150	272	155	22340.0184	257	22350.0184
	120	19,0	23,4	14,0	42,2	27,3	67,6	24,7	15,1	16	-30	150	287	155	22340.0185	257	22350.0185
	130	19,0	23,4	14,0	42,2	27,3	67,6	24,7	15,1	16	-30	150	303	155	22340.0186	257	22350.0186
	140	19,0	23,4	14,0	42,2	27,3	67,6	24,7	15,1	16	-30	150	318	155	22340.0187	257	22350.0187
	150	19,0	23,4	14,0	42,2	27,3	67,6	24,7	15,1	16	-30	150	333	155	22340.0188	257	22350.0188
	50	24,8	23,4	17,0	43,1	27,3	67,6	24,7	15,1	20	-30	150	241	244	22340.0189	403	22350.0189
	60	24,8	23,4	17,0	43,1	27,3	67,6	24,7	15,1	20	-30	150	265	244	22340.0190	403	22350.0190
	70	24,8	23,4	17,0	43,1	27,3	67,6	24,7	15,1	20	-30	150	289	244	22340.0191	403	22350.0191
	80	24,8	23,4	17,0	43,1	27,3	67,6	24,7	15,1	20	-30	150	313	244	22340.0192	403	22350.0192
	90	24,8	23,4	17,0	43,1	27,3	67,6	24,7	15,1	20	-30	150	337	244	22340.0193	403	22350.0193
20	100	24,8	23,4	17,0	43,1	27,3	67,6	24,7	15,1	20	-30	150	361	244	22340.0194	403	22350.0194
	110	24,8	23,4	17,0	43,1	27,3	67,6	24,7	15,1	20	-30	150	385	244	22340.0195	403	22350.0195
	120	24,8	23,4	17,0	43,1	27,3	67,6	24,7	15,1	20	-30	150	409	244	22340.0196	403	22350.0196
	130	24,8	23,4	17,0	43,1	27,3	67,6	24,7	15,1	20	-30	150	433	244	22340.0197	403	22350.0197
	140	24,8	23,4	17,0	43,1	27,3	67,6	24,7	15,1	20	-30	150	457	244	22340.0198	403	22350.0198
	150	24,8	23,4	17,0	43,1	27,3	67,6	24,7	15,1	20	-30	150	481	244	22340.0199	403	22350.0199
	50	31,0	30,4	22,0	54,8	34,2	83,9	33,3	20,1	25	-30	150	449	386	22340.0200	631	22350.0200
	60	31,0	30,4	22,0	54,8	34,2	83,9	33,3	20,1	25	-30	150	487	386	22340.0201	631	22350.0201
	70	31,0	30,4	22,0	54,8	34,2	83,9	33,3	20,1	25	-30	150	525	386	22340.0202	631	22350.0202
	80	31,0	30,4	22,0	54,8	34,2	83,9	33,3	20,1	25	-30	150	563	386	22340.0203	631	22350.0203
	90	31,0	30,4	22,0	54,8	34,2	83,9	33,3	20,1	25	-30	150	601	386	22340.0204	631	22350.0204
25	100	31,0	30,4	22,0	54,8	34,2	83,9	33,3	20,1	25	-30	150	639	386	22340.0205	631	22350.0205
	110	31,0	30,4	22,0	54,8	34,2	83,9	33,3	20,1	25	-30	150	677	386	22340.0206	631	22350.0206
	120	31,0	30,4	22,0	54,8	34,2	83,9	33,3	20,1	25	-30	150	714	386	22340.0207	631	22350.0207
	130	31,0	30,4	22,0	54,8	34,2	83,9	33,3	20,1	25	-30	150	752	386	22340.0208	631	22350.0208
	140	31,0	30,4	22,0	54,8	34,2	83,9	33,3	20,1	25	-30	150	790	386	22340.0105	631	22350.0105
	150	31,0	30,4	22,0	54,8	34,2	83,9	33,3	20,1	25	-30	150	828	386	22340.0106	631	22350.0106

[1] shearing resistance similar to DIN 50141

APPLICATION EXAMPLE

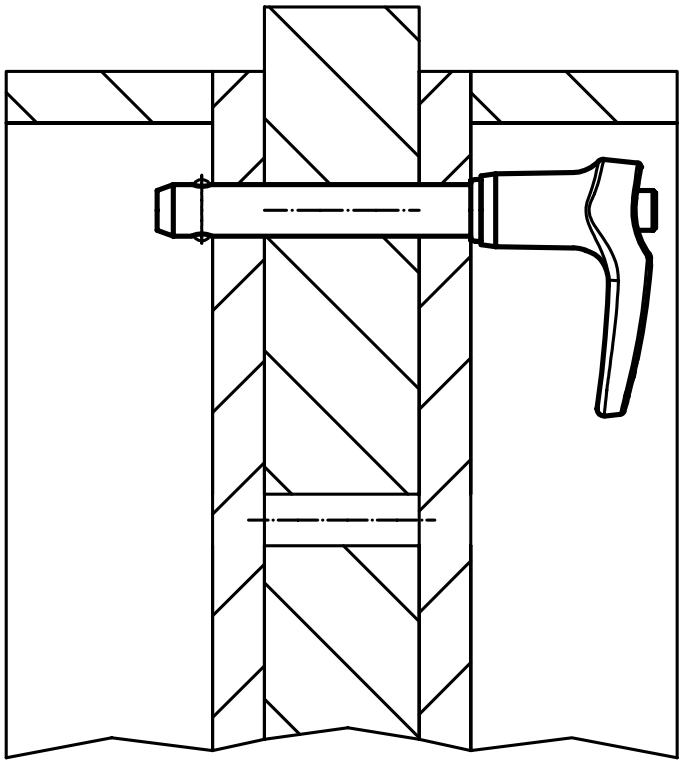

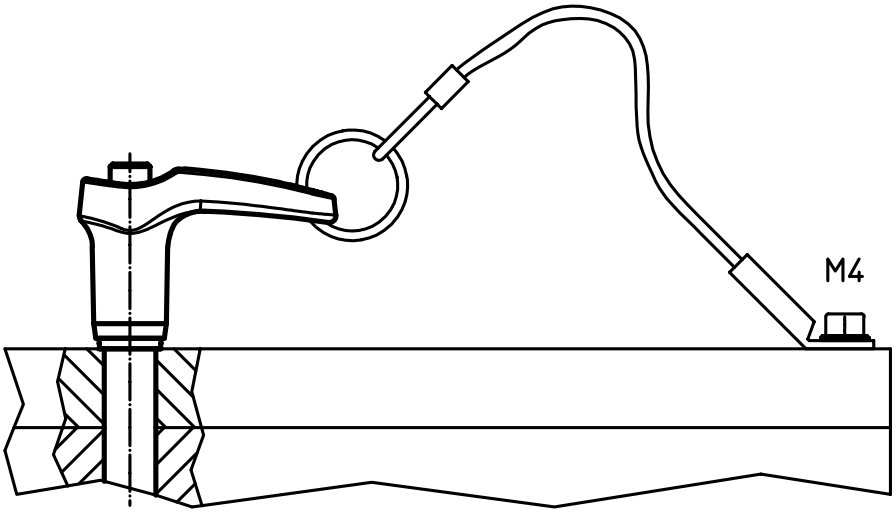

2

Ball Lock Pins • self-locking, with button handle

EH 22340. /EH 22350.

PRODUCT DESCRIPTION

For quick fastening, locking, adjusting, changing and securing. Quickly and easily unlockable for frequently repeated connections.
All versions are corrosion resistant. When using stainless steel 1.4542: high-strength, hardened, abrasion resistant pin with high load capacity.
Compact design with button handle.

Material

Pin part
- Stainless steel 1.4305
- Stainless steel 1.4542, precipitation hardened

Handle
- Aluminium, black similar to RAL 9005

Press button
- Stainless steel, black

Spring
- Stainless steel

Operation

The balls are unlocked by pressing the knob.

Characteristic

Types from stainless steel 1.4542 with marking below the balls.

MORE INFORMATION

Notes

Special types on request.

Accessories

Can easily be fitted with retaining cable EH 22400.

Further products

Locating Bushings, for ball lock pins and socket pins . . . . . → p. 234
Locating Bushings, with flange, for ball lock pins and socket pins. . . . . → p. 236
Retaining Cables . . . . . → p. 237
Positioning Bushings, with collar, DIN 172 A . . . . . → p. 401
Positioning Bushings, without collar, DIN 179 A . . . . . → p. 404
Ball Lock Pins with Button Handle, single acting - complies with NASM / MS 17984 . . . . . → p. 242

DRAWING

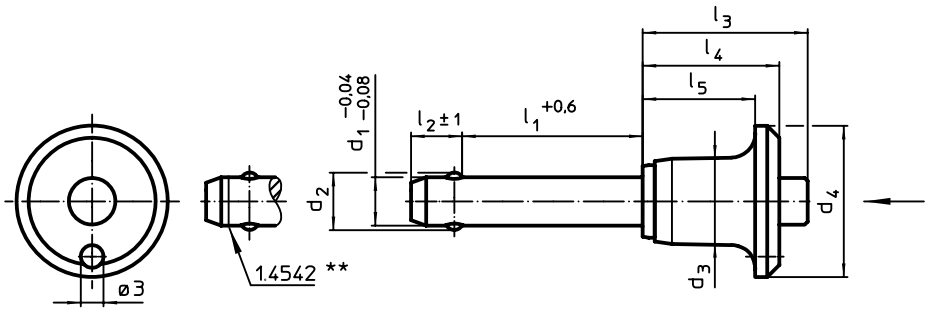

** Types from stainless steel 1.4542 with marking.

ORDER INFORMATION

Dimensions									Location hole H11				Stainless steel 1.4305		Stainless steel 1.4542, precipitation-hardened	
d_1 -0,04 -0,08	l_1 +0,6	d_2	d_3	d_4	l_2 ±1	l_3	l_4	l_5		min.	max.		Shearing resistance, double[1] min.	Art. No.	Shearing resistance, double[1] min.	Art. No.
[mm]									[mm]	[°C]		[g]	[kN]		[kN]	
5	10	5,5	11,3	20	6,0	20,7	17,6	14,6	5	-30	150	12	14	22340.0212	24	22350.0212
	15	5,5	11,3	20	6,0	20,7	17,6	14,6	5	-30	150	12	14	22340.0213	24	22350.0213
	20	5,5	11,3	20	6,0	20,7	17,6	14,6	5	-30	150	13	14	22340.0214	24	22350.0214
	25	5,5	11,3	20	6,0	20,7	17,6	14,6	5	-30	150	14	14	22340.0215	24	22350.0215
	30	5,5	11,3	20	6,0	20,7	17,6	14,6	5	-30	150	15	14	22340.0216	24	22350.0216
	35	5,5	11,3	20	6,0	20,7	17,6	14,6	5	-30	150	15	14	22340.0217	24	22350.0217
	40	5,5	11,3	20	6,0	20,7	17,6	14,6	5	-30	150	16	14	22340.0218	24	22350.0218
	45	5,5	11,3	20	6,0	20,7	17,6	14,6	5	-30	150	17	14	22340.0311	24	22350.0311
	50	5,5	11,3	20	6,0	20,7	17,6	14,6	5	-30	150	18	14	22340.0312	24	22350.0312
	60	5,5	11,3	20	6,0	20,7	17,6	14,6	5	-30	150	19	14	22340.0209	24	22350.0209
	70	5,5	11,3	20	6,0	20,7	17,6	14,6	5	-30	150	21	14	22340.0210	24	22350.0210
	80	5,5	11,3	20	6,0	20,7	17,6	14,6	5	-30	150	22	14	22340.0211	24	22350.0211

[1] shearing resistance similar to DIN 50141

→

Dimensions									Location hole H11				Stainless steel 1.4305		Stainless steel 1.4542, precipitation-hardened	
d_1 -0,04 -0,08	l_1 +0,6	d_2	d_3	d_4	l_2 ±1	l_3	l_4	l_5		min.	max.		Shearing resistance, double[1] min.	Art. No.	Shearing resistance, double[1] min.	Art. No.
[mm]									[mm]	[°C]		[g]	[kN]		[kN]	
6	10	7,0	11,3	20	7,0	20,7	17,6	14,6	6	-30	150	13	21	22340.0222	35	22350.0222
	15	7,0	11,3	20	7,0	20,7	17,6	14,6	6	-30	150	14	21	22340.0223	35	22350.0223
	20	7,0	11,3	20	7,0	20,7	17,6	14,6	6	-30	150	15	21	22340.0224	35	22350.0224
	25	7,0	11,3	20	7,0	20,7	17,6	14,6	6	-30	150	16	21	22340.0225	35	22350.0225
	30	7,0	11,3	20	7,0	20,7	17,6	14,6	6	-30	150	17	21	22340.0226	35	22350.0226
	35	7,0	11,3	20	7,0	20,7	17,6	14,6	6	-30	150	18	21	22340.0227	35	22350.0227
	40	7,0	11,3	20	7,0	20,7	17,6	14,6	6	-30	150	19	21	22340.0228	35	22350.0228
	45	7,0	11,3	20	7,0	20,7	17,6	14,6	6	-30	150	20	21	22340.0229	35	22350.0229
	50	7,0	11,3	20	7,0	20,7	17,6	14,6	6	-30	150	21	21	22340.0230	35	22350.0230
	60	7,0	11,3	20	7,0	20,7	17,6	14,6	6	-30	150	23	21	22340.0219	35	22350.0219
	70	7,0	11,3	20	7,0	20,7	17,6	14,6	6	-30	150	25	21	22340.0220	35	22350.0220
	80	7,0	11,3	20	7,0	20,7	17,6	14,6	6	-30	150	27	21	22340.0221	35	22350.0221
8	10	9,5	14,1	25	8,2	27,3	22,6	18,6	8	-30	150	25	38	22340.0232	63	22350.0232
	15	9,5	14,1	25	8,2	27,3	22,6	18,6	8	-30	150	27	38	22340.0233	63	22350.0233
	20	9,5	14,1	25	8,2	27,3	22,6	18,6	8	-30	150	28	38	22340.0234	63	22350.0234
	25	9,5	14,1	25	8,2	27,3	22,6	18,6	8	-30	150	30	38	22340.0235	63	22350.0235
	30	9,5	14,1	25	8,2	27,3	22,6	18,6	8	-30	150	32	38	22340.0236	63	22350.0236
	35	9,5	14,1	25	8,2	27,3	22,6	18,6	8	-30	150	34	38	22340.0237	63	22350.0237
	40	9,5	14,1	25	8,2	27,3	22,6	18,6	8	-30	150	36	38	22340.0238	63	22350.0238
	45	9,5	14,1	25	8,2	27,3	22,6	18,6	8	-30	150	38	38	22340.0239	63	22350.0239
	50	9,5	14,1	25	8,2	27,3	22,6	18,6	8	-30	150	40	38	22340.0240	63	22350.0240
	60	9,5	14,1	25	8,2	27,3	22,6	18,6	8	-30	150	44	38	22340.0231	63	22350.0231
	70	9,5	14,1	25	8,2	27,3	22,6	18,6	8	-30	150	47	38	22340.0241	63	22350.0241
	80	9,5	14,1	25	8,2	27,3	22,6	18,6	8	-30	150	51	38	22340.0242	63	22350.0242
	90	9,5	14,1	25	8,2	27,3	22,6	18,6	8	-30	150	55	38	22340.0243	63	22350.0243
	100	9,5	14,1	25	8,2	27,3	22,6	18,6	8	-30	150	58	38	22340.0251	63	22350.0251
10	15	12,0	14,1	25	9,6	27,3	22,6	18,6	10	-30	150	32	60	22340.0259	100	22350.0259
	20	12,0	14,1	25	9,6	27,3	22,6	18,6	10	-30	150	35	60	22340.0244	100	22350.0244
	25	12,0	14,1	25	9,6	27,3	22,6	18,6	10	-30	150	38	60	22340.0245	100	22350.0245
	30	12,0	14,1	25	9,6	27,3	22,6	18,6	10	-30	150	40	60	22340.0246	100	22350.0246
	35	12,0	14,1	25	9,6	27,3	22,6	18,6	10	-30	150	44	60	22340.0247	100	22350.0247
	40	12,0	14,1	25	9,6	27,3	22,6	18,6	10	-30	150	47	60	22340.0248	100	22350.0248
	45	12,0	14,1	25	9,6	27,3	22,6	18,6	10	-30	150	50	60	22340.0249	100	22350.0249
	50	12,0	14,1	25	9,6	27,3	22,6	18,6	10	-30	150	53	60	22340.0250	100	22350.0250
	60	12,0	14,1	25	9,6	27,3	22,6	18,6	10	-30	150	59	60	22340.0252	100	22350.0252
	70	12,0	14,1	25	9,6	27,3	22,6	18,6	10	-30	150	65	60	22340.0253	100	22350.0253
	80	12,0	14,1	25	9,6	27,3	22,6	18,6	10	-30	150	71	60	22340.0254	100	22350.0254
	90	12,0	14,1	25	9,6	27,3	22,6	18,6	10	-30	150	76	60	22340.0255	100	22350.0255
	100	12,0	14,1	25	9,6	27,3	22,6	18,6	10	-30	150	83	60	22340.0256	100	22350.0256
	110	12,0	14,1	25	9,6	27,3	22,6	18,6	10	-30	150	89	60	22340.0257	100	22350.0257
	120	12,0	14,1	25	9,6	27,3	22,6	18,6	10	-30	150	95	60	22340.0258	100	22350.0258
12	20	14,5	17,7	35	10,6	33,2	27,3	22,3	12	-30	150	65	87	22340.0264	144	22350.0264
	25	14,5	17,7	35	10,6	33,2	27,3	22,3	12	-30	150	69	87	22340.0265	144	22350.0265
	30	14,5	17,7	35	10,6	33,2	27,3	22,3	12	-30	150	73	87	22340.0266	144	22350.0266
	35	14,5	17,7	35	10,6	33,2	27,3	22,3	12	-30	150	78	87	22340.0267	144	22350.0267
	40	14,5	17,7	35	10,6	33,2	27,3	22,3	12	-30	150	82	87	22340.0268	144	22350.0268
	45	14,5	17,7	35	10,6	33,2	27,3	22,3	12	-30	150	86	87	22340.0269	144	22350.0269
	50	14,5	17,7	35	10,6	33,2	27,3	22,3	12	-30	150	90	87	22340.0270	144	22350.0270
	60	14,5	17,7	35	10,6	33,2	27,3	22,3	12	-30	150	99	87	22340.0272	144	22350.0272
	70	14,5	17,7	35	10,6	33,2	27,3	22,3	12	-30	150	108	87	22340.0274	144	22350.0274
	80	14,5	17,7	35	10,6	33,2	27,3	22,3	12	-30	150	116	87	22340.0276	144	22350.0276
	90	14,5	17,7	35	10,6	33,2	27,3	22,3	12	-30	150	124	87	22340.0260	144	22350.0260
	100	14,5	17,7	35	10,6	33,2	27,3	22,3	12	-30	150	133	87	22340.0261	144	22350.0261
	110	14,5	17,7	35	10,6	33,2	27,3	22,3	12	-30	150	141	87	22340.0262	144	22350.0262
	120	14,5	17,7	35	10,6	33,2	27,3	22,3	12	-30	150	150	87	22340.0263	144	22350.0263

[1] shearing resistance similar to DIN 50141

Dimensions									Location hole H11				Stainless steel 1.4305		Stainless steel 1.4542, precipitation-hardened	
d_1 -0,04 -0,08	l_1 +0,6	d_2	d_3	d_4	l_2 ±1	l_3	l_4	l_5		min.	max.		Shearing resistance, double[1] min.	Art. No.	Shearing resistance, double[1] min.	Art. No.
[mm]									[mm]	[°C]		[g]	[kN]		[kN]	
	30	19,0	23,4	40	14,0	42,2	34,5	28,5	16	-30	150	145	155	22340.0271	257	22350.0271
	35	19,0	23,4	40	14,0	42,2	34,5	28,5	16	-30	150	153	155	22340.0273	257	22350.0273
	40	19,0	23,4	40	14,0	42,2	34,5	28,5	16	-30	150	161	155	22340.0275	257	22350.0275
	45	19,0	23,4	40	14,0	42,2	34,5	28,5	16	-30	150	168	155	22340.0277	257	22350.0277
	50	19,0	23,4	40	14,0	42,2	34,5	28,5	16	-30	150	176	155	22340.0278	257	22350.0278
	60	19,0	23,4	40	14,0	42,2	34,5	28,5	16	-30	150	191	155	22340.0279	257	22350.0279
	70	19,0	23,4	40	14,0	42,2	34,5	28,5	16	-30	150	207	155	22340.0280	257	22350.0280
16	**80**	19,0	23,4	40	14,0	42,2	34,5	28,5	16	-30	150	222	155	22340.0281	257	22350.0281
	90	19,0	23,4	40	14,0	42,2	34,5	28,5	16	-30	150	237	155	22340.0282	257	22350.0282
	100	19,0	23,4	40	14,0	42,2	34,5	28,5	16	-30	150	253	155	22340.0283	257	22350.0283
	110	19,0	23,4	40	14,0	42,2	34,5	28,5	16	-30	150	268	155	22340.0284	257	22350.0284
	120	19,0	23,4	40	14,0	42,2	34,5	28,5	16	-30	150	283	155	22340.0285	257	22350.0285
	130	19,0	23,4	40	14,0	42,2	34,5	28,5	16	-30	150	299	155	22340.0286	257	22350.0286
	140	19,0	23,4	40	14,0	42,2	34,5	28,5	16	-30	150	314	155	22340.0287	257	22350.0287
	150	19,0	23,4	40	14,0	42,2	34,5	28,5	16	-30	150	329	155	22340.0288	257	22350.0288
	50	24,8	23,4	40	17,0	43,1	34,5	28,5	20	-30	150	236	244	22340.0289	403	22350.0289
	60	24,8	23,4	40	17,0	43,1	34,5	28,5	20	-30	150	261	244	22340.0290	403	22350.0290
	70	24,8	23,4	40	17,0	43,1	34,5	28,5	20	-30	150	285	244	22340.0291	403	22350.0291
	80	24,8	23,4	40	17,0	43,1	34,5	28,5	20	-30	150	309	244	22340.0292	403	22350.0292
	90	24,8	23,4	40	17,0	43,1	34,5	28,5	20	-30	150	333	244	22340.0293	403	22350.0293
20	**100**	24,8	23,4	40	17,0	43,1	34,5	28,5	20	-30	150	357	244	22340.0294	403	22350.0294
	110	24,8	23,4	40	17,0	43,1	34,5	28,5	20	-30	150	381	244	22340.0295	403	22350.0295
	120	24,8	23,4	40	17,0	43,1	34,5	28,5	20	-30	150	405	244	22340.0296	403	22350.0296
	130	24,8	23,4	40	17,0	43,1	34,5	28,5	20	-30	150	429	244	22340.0297	403	22350.0297
	140	24,8	23,4	40	17,0	43,1	34,5	28,5	20	-30	150	453	244	22340.0298	403	22350.0298
	150	24,8	23,4	40	17,0	43,1	34,5	28,5	20	-30	150	477	244	22340.0299	403	22350.0299
	50	31,0	30,4	50	22,0	54,8	43,5	36,5	25	-30	150	433	386	22340.0300	631	22350.0300
	60	31,0	30,4	50	22,0	54,8	43,5	36,5	25	-30	150	471	386	22340.0301	631	22350.0301
	70	31,0	30,4	50	22,0	54,8	43,5	36,5	25	-30	150	509	386	22340.0302	631	22350.0302
	80	31,0	30,4	50	22,0	54,8	43,5	36,5	25	-30	150	547	386	22340.0303	631	22350.0303
	90	31,0	30,4	50	22,0	54,8	43,5	36,5	25	-30	150	585	386	22340.0304	631	22350.0304
25	**100**	31,0	30,4	50	22,0	54,8	43,5	36,5	25	-30	150	622	386	22340.0305	631	22350.0305
	110	31,0	30,4	50	22,0	54,8	43,5	36,5	25	-30	150	660	386	22340.0306	631	22350.0306
	120	31,0	30,4	50	22,0	54,8	43,5	36,5	25	-30	150	698	386	22340.0307	631	22350.0307
	130	31,0	30,4	50	22,0	54,8	43,5	36,5	25	-30	150	736	386	22340.0308	631	22350.0308
	140	31,0	30,4	50	22,0	54,8	43,5	36,5	25	-30	150	774	386	22340.0309	631	22350.0309
	150	31,0	30,4	50	22,0	54,8	43,5	36,5	25	-30	150	812	386	22340.0310	631	22350.0310

[1] shearing resistance similar to DIN 50141

APPLICATION EXAMPLE

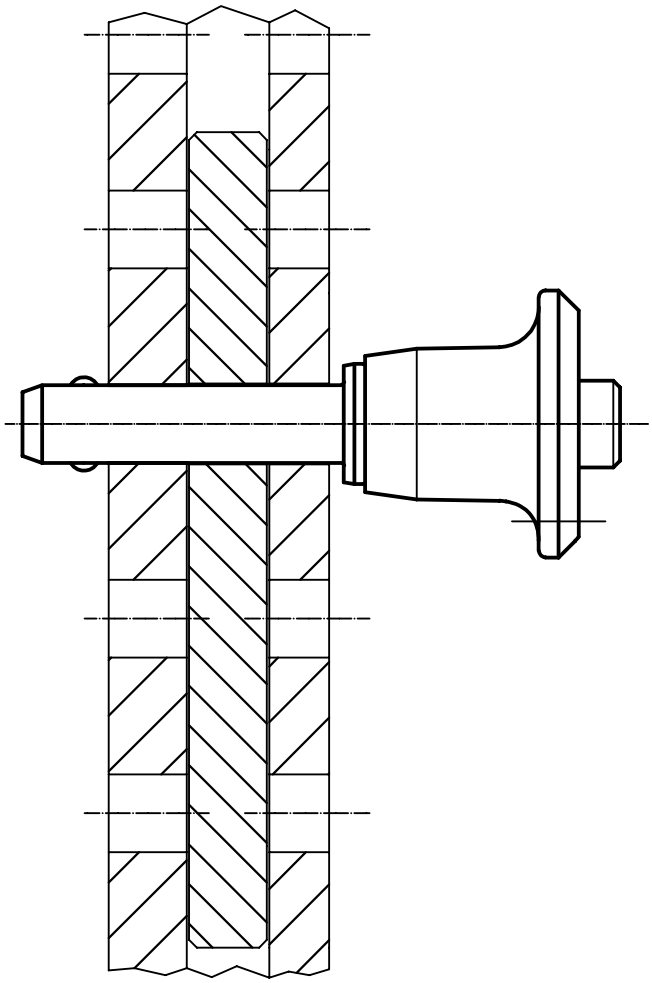

2

Ball Lock Pins • self-locking, with safety handle

EH 22340. /EH 22350.

PRODUCT DESCRIPTION

For quick fastening, locking, adjusting, changing and securing. Quickly and easily unlockable for frequently repeated connections.
All versions are corrosion resistant. When using stainless steel 1.4542: high-strength, hardened, abrasion resistant pin with high load capacity.
Robust safety handle (press button not overlaying). Shape of grip protects from unintentional use of the press button.

Material

Pin part
- Stainless steel 1.4305
- Stainless steel 1.4542, precipitation hardened

Handle
- Stainless steel

Press button
- Stainless steel

Spring
- Stainless steel

Operation

The balls are unlocked by pressing the knob.

Characteristic

Types from stainless steel 1.4542 with marking below the balls.

MORE INFORMATION

Notes

Special types on request.

Accessories

Can easily be fitted with retaining cable EH 22400.

Further products

Locating Bushings, for ball lock pins and socket pins . . . . . → p. 234
Locating Bushings, with flange, for ball lock pins and socket pins. . . . . → p. 236
Retaining Cables . . . . . → p. 237
Positioning Bushings, with collar, DIN 172 A . . . . . → p. 401
Positioning Bushings, without collar, DIN 179 A . . . . . → p. 404

DRAWING

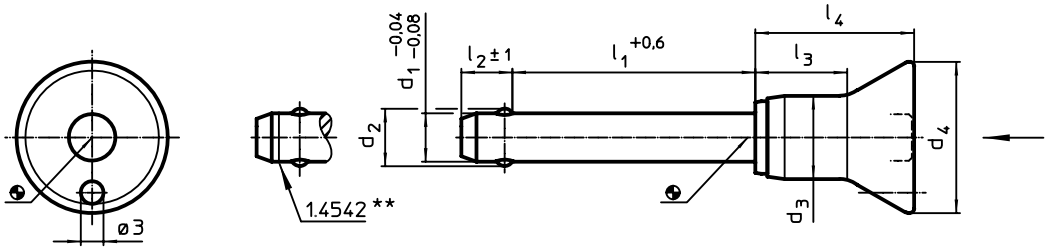

** Types from stainless steel 1.4542 with marking.

ORDER INFORMATION

Dimensions								Location hole H11			Stainless steel 1.4305		Stainless steel 1.4542, precipitation-hardened	
d_1 -0,04 -0,08	l_1 +0,6	d_2	d_3	d_4	l_2 ±1	l_3	l_4		max.		Shearing resistance, double[1] min.	Art. No.	Shearing resistance, double[1] min.	Art. No.
[mm]								[mm]	[°C]	[g]	[kN]		[kN]	
5	10	5,5	10,3	20	6,0	11,6	21,0	5	250	18	14	22340.1012	24	22350.1012
	15	5,5	10,3	20	6,0	11,6	21,0	5	250	19	14	22340.1013	24	22350.1013
	20	5,5	10,3	20	6,0	11,6	21,0	5	250	20	14	22340.1014	24	22350.1014
	25	5,5	10,3	20	6,0	11,6	21,0	5	250	21	14	22340.1015	24	22350.1015
	30	5,5	10,3	20	6,0	11,6	21,0	5	250	21	14	22340.1016	24	22350.1016
	35	5,5	10,3	20	6,0	11,6	21,0	5	250	22	14	22340.1017	24	22350.1017
	40	5,5	10,3	20	6,0	11,6	21,0	5	250	23	14	22340.1018	24	22350.1018
	45	5,5	10,3	20	6,0	11,6	21,0	5	250	24	14	22340.1007	24	22350.1007
	50	5,5	10,3	20	6,0	11,6	21,0	5	250	25	14	22340.1008	24	22350.1008
	60	5,5	10,3	20	6,0	11,6	21,0	5	250	26	14	22340.1009	24	22350.1009
	70	5,5	10,3	20	6,0	11,6	21,0	5	250	27	14	22340.1010	24	22350.1010
	80	5,5	10,3	20	6,0	11,6	21,0	5	250	29	14	22340.1011	24	22350.1011

[1] shearing resistance similar to DIN 50141 →

Dimensions								Location hole H11	max.		Stainless steel 1.4305		Stainless steel 1.4542, precipitation-hardened	
d_1 -0,04 -0,08	l_1 +0,6	d_2	d_3	d_4	l_2 ±1	l_3	l_4				Shearing resistance, double[1] min.	Art. No.	Shearing resistance, double[1] min.	Art. No.
[mm]								[mm]	[°C]	[g]	[kN]		[kN]	
6	10	7,0	10,3	20	7,0	11,6	21,0	6	250	19	21	22340.1022	35	22350.1022
	15	7,0	10,3	20	7,0	11,6	21,0	6	250	20	21	22340.1023	35	22350.1023
	20	7,0	10,3	20	7,0	11,6	21,0	6	250	22	21	22340.1024	35	22350.1024
	25	7,0	10,3	20	7,0	11,6	21,0	6	250	23	21	22340.1025	35	22350.1025
	30	7,0	10,3	20	7,0	11,6	21,0	6	250	24	21	22340.1026	35	22350.1026
	35	7,0	10,3	20	7,0	11,6	21,0	6	250	25	21	22340.1027	35	22350.1027
	40	7,0	10,3	20	7,0	11,6	21,0	6	250	26	21	22340.1028	35	22350.1028
	45	7,0	10,3	20	7,0	11,6	21,0	6	250	27	21	22340.1029	35	22350.1029
	50	7,0	10,3	20	7,0	11,6	21,0	6	250	28	21	22340.1030	35	22350.1030
	60	7,0	10,3	20	7,0	11,6	21,0	6	250	30	21	22340.1019	35	22350.1019
	70	7,0	10,3	20	7,0	11,6	21,0	6	250	32	21	22340.1020	35	22350.1020
	80	7,0	10,3	20	7,0	11,6	21,0	6	250	34	21	22340.1021	35	22350.1021
8	10	9,5	13,3	24	8,2	17,4	27,5	8	250	36	38	22340.1032	63	22350.1032
	15	9,5	13,3	24	8,2	17,4	27,5	8	250	38	38	22340.1033	63	22350.1033
	20	9,5	13,3	24	8,2	17,4	27,5	8	250	40	38	22340.1034	63	22350.1034
	25	9,5	13,3	24	8,2	17,4	27,5	8	250	41	38	22340.1035	63	22350.1035
	30	9,5	13,3	24	8,2	17,4	27,5	8	250	43	38	22340.1036	63	22350.1036
	35	9,5	13,3	24	8,2	17,4	27,5	8	250	45	38	22340.1037	63	22350.1037
	40	9,5	13,3	24	8,2	17,4	27,5	8	250	47	38	22340.1038	63	22350.1038
	45	9,5	13,3	24	8,2	17,4	27,5	8	250	49	38	22340.1039	63	22350.1039
	50	9,5	13,3	24	8,2	17,4	27,5	8	250	51	38	22340.1040	63	22350.1040
	60	9,5	13,3	24	8,2	17,4	27,5	8	250	54	38	22340.1031	63	22350.1031
	70	9,5	13,3	24	8,2	17,4	27,5	8	250	39	38	22340.1041	63	22350.1041
	80	9,5	13,3	24	8,2	17,4	27,5	8	250	41	38	22340.1042	63	22350.1042
	90	9,5	13,3	24	8,2	17,4	27,5	8	250	43	38	22340.1043	63	22350.1043
	100	9,5	13,3	24	8,2	17,4	27,5	8	250	69	38	22340.1051	63	22350.1051
10	15	12,0	13,3	24	9,6	17,4	27,5	10	250	43	60	22340.1059	100	22350.1059
	20	12,0	13,3	24	9,6	17,4	27,5	10	250	46	60	22340.1044	100	22350.1044
	25	12,0	13,3	24	9,6	17,4	27,5	10	250	49	60	22340.1045	100	22350.1045
	30	12,0	13,3	24	9,6	17,4	27,5	10	250	52	60	22340.1046	100	22350.1046
	35	12,0	13,3	24	9,6	17,4	27,5	10	250	55	60	22340.1047	100	22350.1047
	40	12,0	13,3	24	9,6	17,4	27,5	10	250	58	60	22340.1048	100	22350.1048
	45	12,0	13,3	24	9,6	17,4	27,5	10	250	61	60	22340.1049	100	22350.1049
	50	12,0	13,3	24	9,6	17,4	27,5	10	250	64	60	22340.1050	100	22350.1050
	60	12,0	13,3	24	9,6	17,4	27,5	10	250	70	60	22340.1052	100	22350.1052
	70	12,0	13,3	24	9,6	17,4	27,5	10	250	76	60	22340.1053	100	22350.1053
	80	12,0	13,3	24	9,6	17,4	27,5	10	250	82	60	22340.1054	100	22350.1054
	90	12,0	13,3	24	9,6	17,4	27,5	10	250	88	60	22340.1055	100	22350.1055
	100	12,0	13,3	24	9,6	17,4	27,5	10	250	93	60	22340.1056	100	22350.1056
	110	12,0	13,3	24	9,6	17,4	27,5	10	250	99	60	22340.1057	100	22350.1057
	120	12,0	13,3	24	9,6	17,4	27,5	10	250	105	60	22340.1058	100	22350.1058
12	20	14,5	16,5	28	10,6	23,1	33,5	12	250	72	87	22340.1064	144	22350.1064
	25	14,5	16,5	28	10,6	23,1	33,5	12	250	77	87	22340.1065	144	22350.1065
	30	14,5	16,5	28	10,6	23,1	33,5	12	250	82	87	22340.1066	144	22350.1066
	35	14,5	16,5	28	10,6	23,1	33,5	12	250	86	87	22340.1067	144	22350.1067
	40	14,5	16,5	28	10,6	23,1	33,5	12	250	90	87	22340.1068	144	22350.1068
	45	14,5	16,5	28	10,6	23,1	33,5	12	250	94	87	22340.1069	144	22350.1069
	50	14,5	16,5	28	10,6	23,1	33,5	12	250	99	87	22340.1070	144	22350.1070
	60	14,5	16,5	28	10,6	23,1	33,5	12	250	107	87	22340.1072	144	22350.1072
	70	14,5	16,5	28	10,6	23,1	33,5	12	250	116	87	22340.1074	144	22350.1074
	80	14,5	16,5	28	10,6	23,1	33,5	12	250	124	87	22340.1076	144	22350.1076
	90	14,5	16,5	28	10,6	23,1	33,5	12	250	131	87	22340.1060	144	22350.1060
	100	14,5	16,5	28	10,6	23,1	33,5	12	250	140	87	22340.1061	144	22350.1061
	110	14,5	16,5	28	10,6	23,1	33,5	12	250	149	87	22340.1062	144	22350.1062
	120	14,5	16,5	28	10,6	23,1	33,5	12	250	157	87	22340.1063	144	22350.1063

[1] shearing resistance similar to DIN 50141

Dimensions								Location hole H11			Stainless steel 1.4305		Stainless steel 1.4542, precipitation-hardened	
d_1 -0,04 -0,08	l_1 +0,6	d_2	d_3	d_4	l_2 ±1	l_3	l_4		max.		Shearing resistance, double[1] min.	Art. No.	Shearing resistance, double[1] min.	Art. No.
[mm]								[mm]	[°C]	[g]	[kN]		[kN]	
16	30	19,0	23,4	38	14,0	29,5	43,1	16	250	187	155	22340.1071	257	22350.1071
	35	19,0	23,4	38	14,0	29,5	43,1	16	250	194	155	22340.1073	257	22350.1073
	40	19,0	23,4	38	14,0	29,5	43,1	16	250	202	155	22340.1075	257	22350.1075
	45	19,0	23,4	38	14,0	29,5	43,1	16	250	210	155	22340.1077	257	22350.1077
	50	19,0	23,4	38	14,0	29,5	43,1	16	250	217	155	22340.1078	257	22350.1078
	60	19,0	23,4	38	14,0	29,5	43,1	16	250	233	155	22340.1079	257	22350.1079
	70	19,0	23,4	38	14,0	29,5	43,1	16	250	248	155	22340.1080	257	22350.1080
	80	19,0	23,4	38	14,0	29,5	43,1	16	250	263	155	22340.1081	257	22350.1081
	90	19,0	23,4	38	14,0	29,5	43,1	16	250	279	155	22340.1082	257	22350.1082
	100	19,0	23,4	38	14,0	29,5	43,1	16	250	294	155	22340.1083	257	22350.1083
	110	19,0	23,4	38	14,0	29,5	43,1	16	250	309	155	22340.1084	257	22350.1084
	120	19,0	23,4	38	14,0	29,5	43,1	16	250	325	155	22340.1085	257	22350.1085
	130	19,0	23,4	38	14,0	29,5	43,1	16	250	340	155	22340.1086	257	22350.1086
	140	19,0	23,4	38	14,0	29,5	43,1	16	250	355	155	22340.1087	257	22350.1087
	150	19,0	23,4	38	14,0	29,5	43,1	16	250	371	155	22340.1088	257	22350.1088
20	50	24,8	23,4	38	17,0	29,5	43,1	20	250	278	244	22340.1089	406	22350.1089
	60	24,8	23,4	38	17,0	29,5	43,1	20	250	302	244	22340.1090	406	22350.1090
	70	24,8	23,4	38	17,0	29,5	43,1	20	250	326	244	22340.1091	403	22350.1091
	80	24,8	23,4	38	17,0	29,5	43,1	20	250	350	244	22340.1092	403	22350.1092
	90	24,8	23,4	38	17,0	29,5	43,1	20	250	374	244	22340.1093	403	22350.1093
	100	24,8	23,4	38	17,0	29,5	43,1	20	250	398	244	22340.1094	403	22350.1094
	110	24,8	23,4	38	17,0	29,5	43,1	20	250	422	244	22340.1095	403	22350.1095
	120	24,8	23,4	38	17,0	29,5	43,1	20	250	446	244	22340.1096	403	22350.1096
	130	24,8	23,4	38	17,0	29,5	43,1	20	250	470	244	22340.1097	403	22350.1097
	140	24,8	23,4	38	17,0	29,5	43,1	20	250	494	244	22340.1098	403	22350.1098
	150	24,8	23,4	38	17,0	29,5	43,1	20	250	518	244	22340.1099	403	22350.1099
25	50	31,0	30,4	50	22,0	36,8	54,8	25	250	519	386	22340.1100	631	22350.1100
	60	31,0	30,4	50	22,0	36,8	54,8	25	250	557	386	22340.1101	631	22350.1101
	70	31,0	30,4	50	22,0	36,8	54,8	25	250	595	386	22340.1102	631	22350.1102
	80	31,0	30,4	50	22,0	36,8	54,8	25	250	633	386	22340.1103	631	22350.1103
	90	31,0	30,4	50	22,0	36,8	54,8	25	250	671	386	22340.1104	631	22350.1104
	100	31,0	30,4	50	22,0	36,8	54,8	25	250	709	386	22340.1105	631	22350.1105
	110	31,0	30,4	50	22,0	36,8	54,8	25	250	746	386	22340.1106	631	22350.1106
	120	31,0	30,4	50	22,0	36,8	54,8	25	250	784	386	22340.1107	631	22350.1107
	130	31,0	30,4	50	22,0	36,8	54,8	25	250	822	386	22340.1108	631	22350.1108
	140	31,0	30,4	50	22,0	36,8	54,8	25	250	860	386	22340.1109	631	22350.1109
	150	31,0	30,4	50	22,0	36,8	54,8	25	250	898	386	22340.1110	631	22350.1110

[1] shearing resistance similar to DIN 50141

APPLICATION EXAMPLE

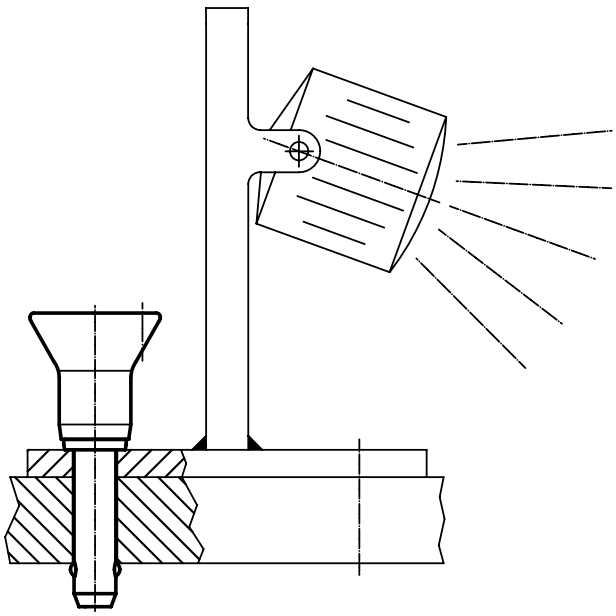

Clamping Pins • self-locking, with span compensation

EH 22360.

PRODUCT DESCRIPTION

Used for fixing and simultaneously tightly connecting thin walled plates. Clamping distance of 5 mm for clamping of sheets for welding work, for protection, coverings, to close doors etc.
All versions are corrosion resistant.
Version with ergonomic grip.

Material

Pin part
- Stainless steel 1.4305

Handle
- Thermoplastic PA 6, grey

Spring
- Stainless steel

Operation

The balls are unlocked by pressing the knob.

MORE INFORMATION

Accessories

Can easily be fitted with retaining cable EH 22400.

Further products

Locating Bushings, for ball lock pins and socket pins . . . . . → p. 234
Locating Bushings, with flange, for ball lock pins and socket pins. . . . . → p. 236
Retaining Cables . . . . . → p. 237

DRAWING

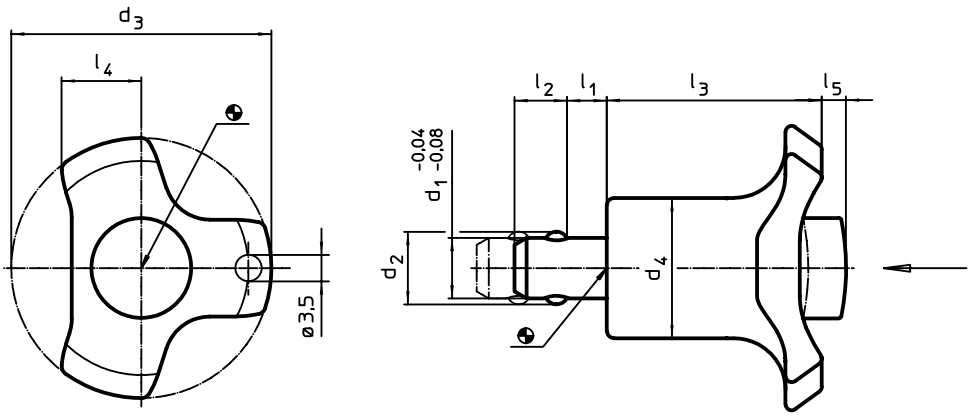

ORDER INFORMATION

Dimensions									Location hole H11	Clamping force max.	min.	max.		Art. No.
d_1 -0,04 -0,08	l_1	d_2	d_3	d_4	l_2	l_3	l_4	l_5 Un-clamped						
[mm]									[mm]	[N]	[°C]		[g]	
6	0 – 5	7,0	38	17,5	5,0	30,2	11,0	3	6	16	-30	80	19	22360.0010
	5 – 10	7,0	38	17,5	5,0	30,2	11,0	3	6	18	-30	80	23	22360.0012
8	0 – 5	9,5	38	17,5	6,5	30,2	11,0	3	8	16	-30	80	22	22360.0020
	5 – 10	9,5	38	17,5	6,5	30,2	11,0	3	8	18	-30	80	25	22360.0022
10	0 – 5	12,0	47	23,0	8,7	36,0	11,0	4	10	21	-30	80	45	22360.0030
	5 – 10	12,0	47	23,0	8,7	36,0	11,0	4	10	23	-30	80	47	22360.0032
12	0 – 5	14,0	47	23,0	9,4	36,0	13,5	4	12	21	-30	80	47	22360.0040
	5 – 10	14,0	47	23,0	9,4	36,0	13,5	4	12	23	-30	80	54	22360.0042

APPLICATION EXAMPLE

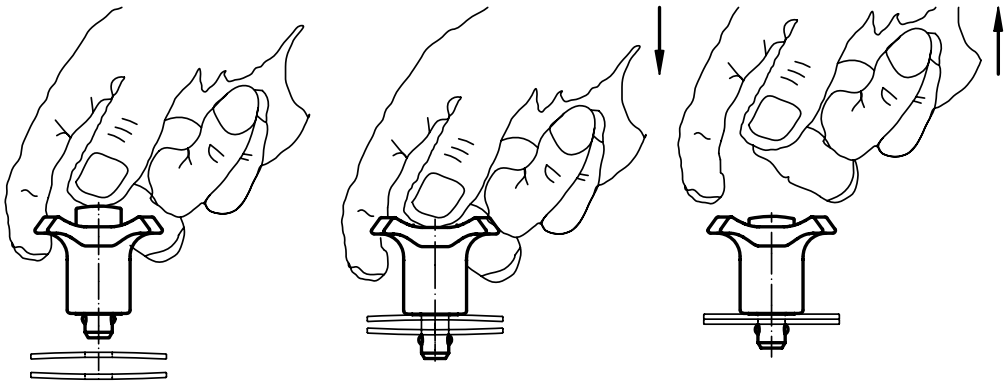

2

Ball Lock Pins • self-locking, with standard handle

EH 22370. /EH 22380.

PRODUCT DESCRIPTION

For quick fastening, locking, adjusting, changing and securing. Quickly and easily unlockable for frequently repeated connections.
All versions are corrosion resistant. When using stainless steel 1.4542: high-strength, hardened, abrasion resistant pin with high load capacity.
Compact design with standard handle.

Material

Pin part
- Stainless steel 1.4305
- Stainless steel 1.4542, precipitation hardened

Spring
- Stainless steel

Operation

The balls are unlocked by pressing the knob.

Characteristic

Types from stainless steel 1.4542 with marking below the balls.

MORE INFORMATION

Notes

Special types on request.

Accessories

Can easily be fitted with retaining cable EH 22400.

Further products

Ball Lock Pins, self-locking, with standard handle, titanium . . . . . → p. 222
Locating Bushings, for ball lock pins and socket pins . . . . . → p. 234
Locating Bushings, with flange, for ball lock pins and socket pins. . . . . → p. 236
Retaining Cables . . . . . → p. 237
Positioning Bushings, with collar, DIN 172 A . . . . . → p. 401
Positioning Bushings, without collar, DIN 179 A . . . . . → p. 404

DRAWING

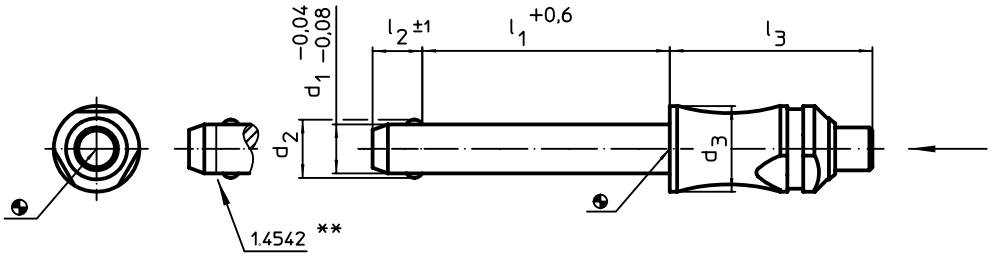

** Types from stainless steel 1.4542 with marking.

ORDER INFORMATION

Dimensions						Location hole H11			Stainless steel 1.4305		Stainless steel 1.4542, precipitation-hardened	
d_1 -0,04 -0,08	l_1 +0,6	d_2	d_3	l_2 ±1	l_3		max.		Shearing resistance, double[1] min.	Art. No.	Shearing resistance, double[1] min.	Art. No.
[mm]						[mm]	[°C]	[g]	[kN]		[kN]	
5	10	5,5	10	6,0	26,2	5	250	10	14	22370.0012	24	22380.0012
	15	5,5	10	6,0	26,2	5	250	11	14	22370.0013	24	22380.0013
	20	5,5	10	6,0	26,2	5	250	12	14	22370.0014	24	22380.0014
	25	5,5	10	6,0	26,2	5	250	13	14	22370.0015	24	22380.0015
	30	5,5	10	6,0	26,2	5	250	13	14	22370.0016	24	22380.0016
	35	5,5	10	6,0	26,2	5	250	14	14	22370.0017	24	22380.0017
	40	5,5	10	6,0	26,2	5	250	15	14	22370.0018	24	22380.0018
	45	5,5	10	6,0	26,2	5	250	15	14	22370.0007	24	22380.0007
	50	5,5	10	6,0	26,2	5	250	16	14	22370.0008	24	22380.0008
	60	5,5	10	6,0	26,2	5	250	17	14	22370.0009	24	22380.0009
	70	5,5	10	6,0	26,2	5	250	19	14	22370.0010	24	22380.0010
	80	5,5	10	6,0	26,2	5	250	20	14	22370.0011	24	22380.0011

[1] shearing resistance similar to DIN 50141 →

Dimensions						Location hole H11			Stainless steel 1.4305		Stainless steel 1.4542, precipitation-hardened	
d_1 -0,04 -0,08	l_1 +0,6	d_2	d_3	l_2 ±1	l_3		max.		Shearing resistance, double[1] min.	Art. No.	Shearing resistance, double[1] min.	Art. No.
[mm]						[mm]	[°C]	[g]	[kN]		[kN]	
6	10	7,0	10	7,0	26,2	6	250	11	21	22370.0022	35	22380.0022
	15	7,0	10	7,0	26,2	6	250	12	21	22370.0023	35	22380.0023
	20	7,0	10	7,0	26,2	6	250	13	21	22370.0024	35	22380.0024
	25	7,0	10	7,0	26,2	6	250	14	21	22370.0025	35	22380.0025
	30	7,0	10	7,0	26,2	6	250	15	21	22370.0026	35	22380.0026
	35	7,0	10	7,0	26,2	6	250	16	21	22370.0027	35	22380.0027
	40	7,0	10	7,0	26,2	6	250	17	21	22370.0028	35	22380.0028
	45	7,0	10	7,0	26,2	6	250	18	21	22370.0029	35	22380.0029
	50	7,0	10	7,0	26,2	6	250	19	21	22370.0030	35	22380.0030
	60	7,0	10	7,0	26,2	6	250	21	21	22370.0019	35	22380.0019
	70	7,0	10	7,0	26,2	6	250	23	21	22370.0020	35	22380.0020
	80	7,0	10	7,0	26,2	6	250	25	21	22370.0021	35	22380.0021
8	10	9,6	14	8,2	33,1	8	250	29	38	22370.0032	63	22380.0032
	15	9,6	14	8,2	33,1	8	250	31	38	22370.0033	63	22380.0033
	20	9,6	14	8,2	33,1	8	250	33	38	22370.0034	63	22380.0034
	25	9,6	14	8,2	33,1	8	250	34	38	22370.0035	63	22380.0035
	30	9,6	14	8,2	33,1	8	250	36	38	22370.0036	63	22380.0036
	35	9,6	14	8,2	33,1	8	250	38	38	22370.0037	63	22380.0037
	40	9,6	14	8,2	33,1	8	250	40	38	22370.0038	63	22380.0038
	45	9,6	14	8,2	33,1	8	250	42	38	22370.0039	63	22380.0039
	50	9,6	14	8,2	33,1	8	250	44	38	22370.0040	63	22380.0040
	60	9,6	14	8,2	33,1	8	250	47	38	22370.0031	63	22380.0031
	70	9,6	14	8,2	33,1	8	250	51	38	22370.0041	63	22380.0041
	80	9,6	14	8,2	33,1	8	250	55	38	22370.0042	63	22380.0042
	90	9,6	14	8,2	33,1	8	250	58	38	22370.0043	63	22380.0043
	100	9,6	14	8,2	33,1	8	250	62	38	22370.0051	63	22380.0051
10	15	12,0	14	9,6	33,1	10	250	36	60	22370.0059	100	22380.0059
	20	12,0	14	9,6	33,1	10	250	39	60	22370.0044	100	22380.0044
	25	12,0	14	9,6	33,1	10	250	42	60	22370.0045	100	22380.0045
	30	12,0	14	9,6	33,1	10	250	45	60	22370.0046	100	22380.0046
	35	12,0	14	9,6	33,1	10	250	48	60	22370.0047	100	22380.0047
	40	12,0	14	9,6	33,1	10	250	51	60	22370.0048	100	22380.0048
	45	12,0	14	9,6	33,1	10	250	54	60	22370.0049	100	22380.0049
	50	12,0	14	9,6	33,1	10	250	57	60	22370.0050	100	22380.0050
	60	12,0	14	9,6	33,1	10	250	63	60	22370.0052	100	22380.0052
	70	12,0	14	9,6	33,1	10	250	69	60	22370.0053	100	22380.0053
	80	12,0	14	9,6	33,1	10	250	74	60	22370.0054	100	22380.0054
	90	12,0	14	9,6	33,1	10	250	80	60	22370.0055	100	22380.0055
	100	12,0	14	9,6	33,1	10	250	86	60	22370.0056	100	22380.0056
	110	12,0	14	9,6	33,1	10	250	92	60	22370.0057	100	22380.0057
	120	12,0	14	9,6	33,1	10	250	98	60	22370.0058	100	22380.0058
12	20	14,5	20	10,6	39,5	12	250	80	87	22370.0064	144	22380.0064
	25	14,5	20	10,6	39,5	12	250	84	87	22370.0065	144	22380.0065
	30	14,5	20	10,6	39,5	12	250	88	87	22370.0066	144	22380.0066
	35	14,5	20	10,6	39,5	12	250	92	87	22370.0067	144	22380.0067
	40	14,5	20	10,6	39,5	12	250	96	87	22370.0068	144	22380.0068
	45	14,5	20	10,6	39,5	12	250	101	87	22370.0069	144	22380.0069
	50	14,5	20	10,6	39,5	12	250	105	87	22370.0070	144	22380.0070
	60	14,5	20	10,6	39,5	12	250	113	87	22370.0072	144	22380.0072
	70	14,5	20	10,6	39,5	12	250	122	87	22370.0074	144	22380.0074
	80	14,5	20	10,6	39,5	12	250	130	87	22370.0076	144	22380.0076
	90	14,5	20	10,6	39,5	12	250	139	87	22370.0060	144	22380.0060
	100	14,5	20	10,6	39,5	12	250	148	87	22370.0061	144	22380.0061
	110	14,5	20	10,6	39,5	12	250	157	87	22370.0062	144	22380.0062
	120	14,5	20	10,6	39,5	12	250	165	87	22370.0063	144	22380.0063

[1] shearing resistance similar to DIN 50141

Dimensions						Location hole H11			Stainless steel 1.4305		Stainless steel 1.4542, precipitation-hardened	
d_1 -0,04 -0,08	l_1 +0,6	d_2	d_3	l_2 ±1	l_3		max.		Shearing resistance, double[1] min.	Art. No.	Shearing resistance, double[1] min.	Art. No.
[mm]						[mm]	[°C]	[g]	[kN]		[kN]	
16	30	19,0	20	14,0	39,5	16	250	120	155	22370.0086	257	22380.0086
	35	19,0	20	14,0	39,5	16	250	127	155	22370.0087	257	22380.0087
	40	19,0	20	14,0	39,5	16	250	135	155	22370.0088	257	22380.0088
	45	19,0	20	14,0	39,5	16	250	143	155	22370.0089	257	22380.0089
	50	19,0	20	14,0	39,5	16	250	150	155	22370.0090	257	22380.0090
	60	19,0	20	14,0	39,5	16	250	166	155	22370.0092	257	22380.0092
	70	19,0	20	14,0	39,5	16	250	181	155	22370.0094	257	22380.0094
	80	19,0	20	14,0	39,5	16	250	196	155	22370.0096	257	22380.0096
	90	19,0	20	14,0	39,5	16	250	216	155	22370.0097	257	22380.0097
	100	19,0	20	14,0	39,5	16	250	233	155	22370.0098	257	22380.0098
	110	19,0	20	14,0	39,5	16	250	248	155	22370.0099	257	22380.0099
	120	19,0	20	14,0	39,5	16	250	263	155	22370.0100	257	22380.0100
	130	19,0	20	14,0	39,5	16	250	279	155	22370.0101	257	22380.0101
	140	19,0	20	14,0	39,5	16	250	295	155	22370.0102	257	22380.0102
	150	19,0	20	14,0	39,5	16	250	310	155	22370.0103	257	22380.0103
20	50	25,0	28	20,5	49,9	20	250	303	244	22370.0111	403	22380.0111
	60	25,0	28	20,5	49,9	20	250	322	244	22370.0112	403	22380.0112
	70	25,0	28	20,5	49,9	20	250	351	244	22370.0113	403	22380.0113
	80	25,0	28	20,5	49,9	20	250	370	244	22370.0116	403	22380.0116
	90	25,0	28	20,5	49,9	20	250	400	244	22370.0117	403	22380.0117
	100	25,0	28	20,5	49,9	20	250	414	244	22370.0120	403	22380.0120
	110	25,0	28	20,5	49,9	20	250	448	244	22370.0121	403	22380.0121
	120	25,0	28	20,5	49,9	20	250	466	244	22370.0124	403	22380.0124
	130	25,0	28	20,5	49,9	20	250	497	244	22370.0125	403	22380.0125
	140	25,0	28	20,5	49,9	20	250	520	244	22370.0126	403	22380.0126
	150	25,0	28	20,5	49,9	20	250	545	244	22370.0127	403	22380.0127
25	50	30,8	28	22,0	49,9	25	250	395	386	22370.0129	631	22380.0129
	60	30,8	28	22,0	49,9	25	250	432	386	22370.0130	631	22380.0130
	70	30,8	28	22,0	49,9	25	250	470	386	22370.0131	631	22380.0131
	80	30,8	28	22,0	49,9	25	250	507	386	22370.0132	631	22380.0132
	90	30,8	28	22,0	49,9	25	250	545	386	22370.0133	631	22380.0133
	100	30,8	28	22,0	49,9	25	250	582	386	22370.0134	631	22380.0134
	110	30,8	28	22,0	49,9	25	250	620	386	22370.0135	631	22380.0135
	120	30,8	28	22,0	49,9	25	250	657	386	22370.0136	631	22380.0136
	130	30,8	28	22,0	49,9	25	250	695	386	22370.0137	631	22380.0137
	140	30,8	28	22,0	49,9	25	250	732	386	22370.0138	631	22380.0138
	150	30,8	28	22,0	49,9	25	250	770	386	22370.0139	631	22380.0139

[1] shearing resistance similar to DIN 50141

APPLICATION EXAMPLE

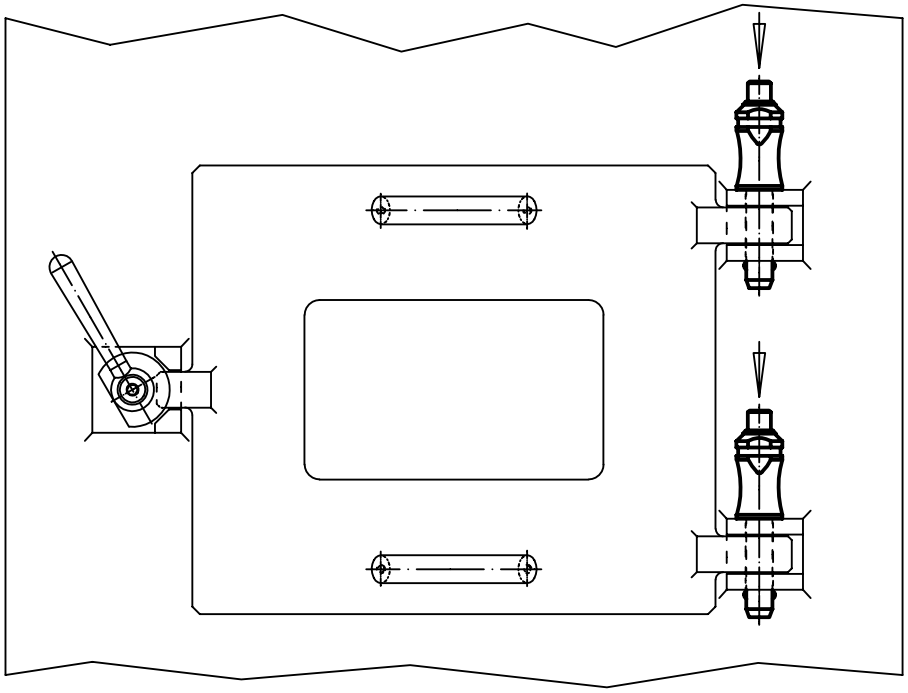

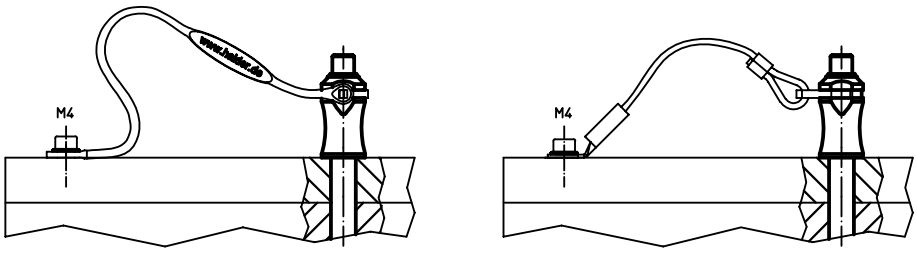

2

Ball Lock Pins • self-locking, with standard handle, titanium

EH 22390.

PRODUCT DESCRIPTION

Ball lock pins made from titanium stand out due to the following positive material features:
- Over 40% lighter weight compared to a steel variant
- Absolutely corrosion resistant.

The version made from titanium is used in areas such as lightweight construction, maritime environments and chemical manufacturing.
For quick fastening, locking, adjusting, changing and securing. Quickly and easily unlockable for frequently repeated connections.
Compact design with standard handle.

Material

Pin part
- Titanium

Ball
- Ceramic

Spring
- Corrosion resistant alloy

Operation

The balls are unlocked by pressing the knob.

MORE INFORMATION

Notes
Special types on request.

Accessories
Can easily be fitted with retaining cable EH 22400.

Further products
Ball Lock Pins, self-locking, with standard handle . . . . . → p. 218
Retaining Cables . . . . . → p. 237

DRAWING

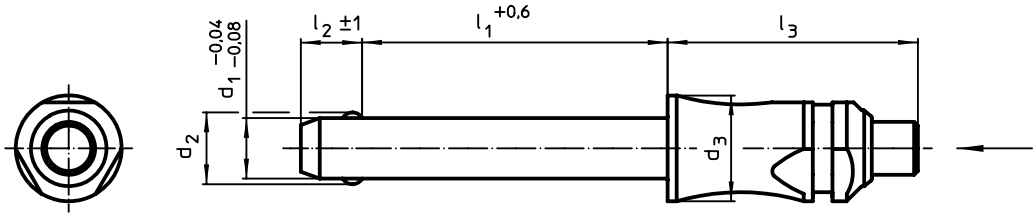

ORDER INFORMATION

Dimensions						Location hole H11	Shearing resistance, double[1] min.	max.		Art. No.
d_1 -0,04 -0,08	l_1 +0,6	d_2	d_3	l_2 ±1	l_3					
[mm]						[mm]	[kN]	[°C]	[g]	
6	10	7,0	10	7,0	26,2	6	23	400	7	22390.0022
	20	7,0	10	7,0	26,2	6	23	400	8	22390.0024
	30	7,0	10	7,0	26,2	6	23	400	9	22390.0026
	40	7,0	10	7,0	26,2	6	23	400	10	22390.0028
	50	7,0	10	7,0	26,2	6	23	400	11	22390.0030
8	20	9,6	14	8,2	33,1	8	43	400	19	22390.0034
	30	9,6	14	8,2	33,1	8	43	400	21	22390.0036
	40	9,6	14	8,2	33,1	8	43	400	23	22390.0038
	50	9,6	14	8,2	33,1	8	43	400	25	22390.0040
10	20	12,0	14	9,6	33,1	10	43	400	23	22390.0044
	30	12,0	14	9,6	26,2	10	69	400	26	22390.0046
	40	12,0	14	9,6	26,2	10	69	400	29	22390.0048
	50	12,0	14	9,6	26,2	10	69	400	32	22390.0050
	60	12,0	14	9,6	26,2	10	69	400	36	22390.0052

[1] shearing resistance similar to DIN 50141 (determined by tests)

Ball Lock Pins • self-locking, with elastic grip

EH 22370. /EH 22380.

PRODUCT DESCRIPTION

For quick fastening, locking, adjusting, changing and securing. Various applications in different sectors, e.g. sports, leisure, medical healing and remedial instruments and apparatuses, machine construction and engineering etc. Quickly and easily unlockable for frequently repeated connections.
All versions are corrosion resistant. When using stainless steel 1.4542: high-strength, hardened, abrasion resistant pin with high load capacity.
Elastic and ergonomic grip with integrated reset (locking). New, modern, patented design.

Material

Pin part
- Stainless steel 1.4305
- Stainless steel 1.4542, precipitation hardened

Handle
- Thermoplastic (PBT/TPE), grey / orange

Operation

The balls are unlocked by pressing the knob.

Characteristic

Types from stainless steel 1.4542 with marking below the balls.

MORE INFORMATION

Notes

Special types on request.

Accessories

Can easily be fitted with retaining cable EH 22400.

Further products

Locating Bushings, for ball lock pins and socket pins . . . . . → p. 234
Locating Bushings, with flange, for ball lock pins and socket pins. . . . . → p. 236
Retaining Cables . . . . . → p. 237
Positioning Bushings, with collar, DIN 172 A . . . . . → p. 401
Positioning Bushings, without collar, DIN 179 A . . . . . → p. 404

DRAWING

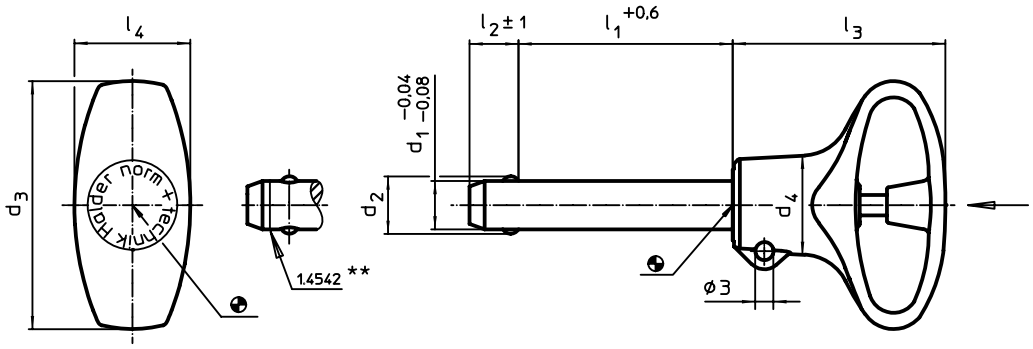

** Types from stainless steel 1.4542 with marking.

ORDER INFORMATION

Dimensions								Location hole H11				Stainless steel 1.4305		Stainless steel 1.4542, precipitation-hardened	
d_1 -0,04 -0,08	l_1 +0,6	d_2	d_3	d_4	l_2 ±1	l_3	l_4		min.	max.		Shearing resistance, double[1] min.	Art. No.	Shearing resistance, double[1] min.	Art. No.
[mm]								[mm]	[°C]		[g]	[kN]		[kN]	
5	10	5,5	36	12,7	6,0	31,0	15,9	5	-30	80	9	14	22370.0712	24	22380.0712
	15	5,5	36	12,7	6,0	31,0	15,9	5	-30	80	10	14	22370.0713	24	22380.0713
	20	5,5	36	12,7	6,0	31,0	15,9	5	-30	80	11	14	22370.0714	24	22380.0714
	25	5,5	36	12,7	6,0	31,0	15,9	5	-30	80	11	14	22370.0715	24	22380.0715
	30	5,5	36	12,7	6,0	31,0	15,9	5	-30	80	12	14	22370.0716	24	22380.0716
6	10	7,0	36	12,7	7,0	31,0	15,9	6	-30	80	10	21	22370.0722	35	22380.0722
	15	7,0	36	12,7	7,0	31,0	15,9	6	-30	80	11	21	22370.0723	35	22380.0723
	20	7,0	36	12,7	7,0	31,0	15,9	6	-30	80	12	21	22370.0724	35	22380.0724
	25	7,0	36	12,7	7,0	31,0	15,9	6	-30	80	13	21	22370.0725	35	22380.0725
	30	7,0	36	12,7	7,0	31,0	15,9	6	-30	80	14	21	22370.0726	35	22380.0726
	35	7,0	36	12,7	7,0	31,0	15,9	6	-30	80	15	21	22370.0727	35	22380.0727
	40	7,0	36	12,7	7,0	31,0	15,9	6	-30	80	16	21	22370.0728	35	22380.0728
	45	7,0	36	12,7	7,0	31,0	15,9	6	-30	80	18	21	22370.0729	35	22380.0729
	50	7,0	36	12,7	7,0	31,0	15,9	6	-30	80	18	21	22370.0730	35	22380.0730

[1] shearing resistance similar to DIN 50141 →

Dimensions								Location hole H11				Stainless steel 1.4305		Stainless steel 1.4542, precipitation-hardened	
d_1 -0,04 -0,08	l_1 +0,6	d_2	d_3	d_4	l_2 ±1	l_3	l_4		min.	max.		Shearing resistance, double[1] min.	Art. No.	Shearing resistance, double[1] min.	Art. No.
[mm]								[mm]	[°C]		[g]	[kN]		[kN]	
8	20	9,6	41	16,4	8,2	34,8	19,2	8	-30	80	23	38	22370.0734	63	22380.0734
	25	9,6	41	16,4	8,2	34,8	19,2	8	-30	80	25	38	22370.0735	63	22380.0735
	30	9,6	41	16,4	8,2	34,8	19,2	8	-30	80	26	38	22370.0736	63	22380.0736
	35	9,6	41	16,4	8,2	34,8	19,2	8	-30	80	28	38	22370.0737	63	22380.0737
	40	9,6	41	16,4	8,2	34,8	19,2	8	-30	80	30	38	22370.0738	63	22380.0738
	45	9,6	41	16,4	8,2	34,8	19,2	8	-30	80	32	38	22370.0739	63	22380.0739
	50	9,6	41	16,4	8,2	34,8	19,2	8	-30	80	34	38	22370.0740	63	22380.0740
10	20	12,0	41	16,4	9,6	34,8	19,2	10	-30	80	30	60	22370.0744	100	22380.0744
	25	12,0	41	16,4	9,6	34,8	19,2	10	-30	80	32	60	22370.0745	100	22380.0745
	30	12,0	41	16,4	9,6	34,8	19,2	10	-30	80	35	60	22370.0746	100	22380.0746
	35	12,0	41	16,4	9,6	34,8	19,2	10	-30	80	38	60	22370.0747	100	22380.0747
	40	12,0	41	16,4	9,6	34,8	19,2	10	-30	80	41	60	22370.0748	100	22380.0748
	45	12,0	41	16,4	9,6	34,8	19,2	10	-30	80	44	60	22370.0749	100	22380.0749
	50	12,0	41	16,4	9,6	34,8	19,2	10	-30	80	47	60	22370.0750	100	22380.0750
	60	12,0	41	16,4	9,6	34,8	19,2	10	-30	80	53	60	22370.0752	100	22380.0752
12	25	14,5	49	21,2	10,6	40,5	24,8	12	-30	80	54	87	22370.0765	144	22380.0765
	30	14,5	49	21,2	10,6	40,5	24,8	12	-30	80	59	87	22370.0766	144	22380.0766
	35	14,5	49	21,2	10,6	40,5	24,8	12	-30	80	63	87	22370.0767	144	22380.0767
	40	14,5	49	21,2	10,6	40,5	24,8	12	-30	80	67	87	22370.0768	144	22380.0768
	45	14,5	49	21,2	10,6	40,5	24,8	12	-30	80	71	87	22370.0769	144	22380.0769
	50	14,5	49	21,2	10,6	40,5	24,8	12	-30	80	75	87	22370.0770	144	22380.0770
	60	14,5	49	21,2	10,6	40,5	24,8	12	-30	80	84	87	22370.0772	144	22380.0772
	70	14,5	49	21,2	10,6	40,5	24,8	12	-30	80	93	87	22370.0774	144	22380.0774
	80	14,5	49	21,2	10,6	40,5	24,8	12	-30	80	101	87	22370.0776	144	22380.0776
16	30	19,0	49	21,2	14,0	40,5	24,8	16	-30	80	91	155	22370.0786	257	22380.0786
	35	19,0	49	21,2	14,0	40,5	24,8	16	-30	80	98	155	22370.0787	257	22380.0787
	40	19,0	49	21,2	14,0	40,5	24,8	16	-30	80	106	155	22370.0788	257	22380.0788
	45	19,0	49	21,2	14,0	40,5	24,8	16	-30	80	114	155	22370.0789	257	22380.0789
	50	19,0	49	21,2	14,0	40,5	24,8	16	-30	80	121	155	22370.0790	257	22380.0790
	60	19,0	49	21,2	14,0	40,5	24,8	16	-30	80	137	155	22370.0792	257	22380.0792
	70	19,0	49	21,2	14,0	40,5	24,8	16	-30	80	152	155	22370.0794	257	22380.0794
	80	19,0	49	21,2	14,0	40,5	24,8	16	-30	80	167	155	22370.0796	257	22380.0796

[1] shearing resistance similar to DIN 50141

APPLICATION EXAMPLE

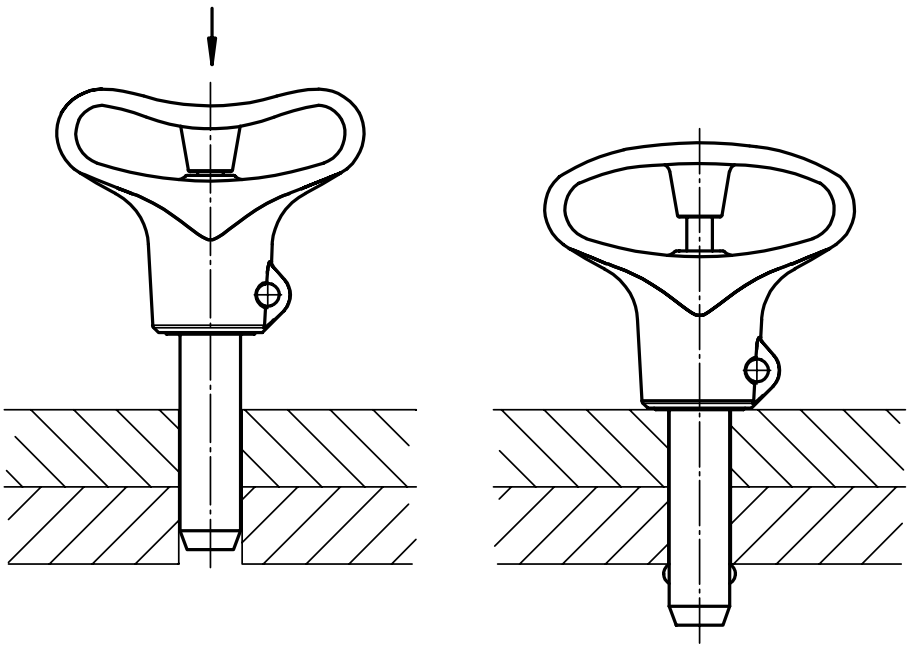

Ball Lock Pins • self-locking, with combination handle

EH 22370.

PRODUCT DESCRIPTION

For quick fastening, locking, adjusting, changing and securing. Quickly and easily unlockable for frequently repeated connections.
All versions are corrosion resistant.
Ergonomic grip, different colour combinations available. The grip design provides protection of unintentional unlocking.

Material

Pin part
- Stainless steel 1.4305

Handle
- Thermoplastic PA 6 grey / orange
- Thermoplastic PA 6 grey / grey
- Thermoplastic PA 6 grey / blue
- Thermoplastic PA 6 black / black

Spring
- Stainless steel

Operation

The balls are unlocked by pressing the knob.

MORE INFORMATION

Notes

Special types on request.

References

Stainless steel 1.4542, see EH 22380.

Accessories

Can easily be fitted with retaining cable EH 22400.

Further products

Ball Lock Pins, self-locking, with combination handle, precipitation-hardened . → p. 228
Locating Bushings, for ball lock pins and socket pins . . . . . → p. 234
Locating Bushings, with flange, for ball lock pins and socket pins. . . . . → p. 236
Retaining Cables . . . . . → p. 237
Positioning Bushings, with collar, DIN 172 A . . . . . → p. 401
Positioning Bushings, without collar, DIN 179 A . . . . . → p. 404

DRAWING

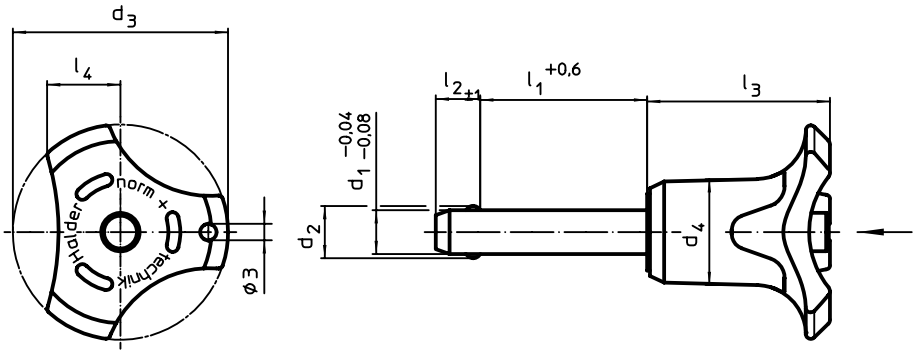

ORDER INFORMATION

Dimensions								Location hole H11	Shearing resistance, double[1] min.				Art. No.			
d_1 -0,04 -0,08	l_1 +0,6	d_2	d_3	d_4	l_2 ±1	l_3	l_4			min.	max.		orange	grey	blue	black
[mm]								[mm]	[kN]	[°C]		[g]				
5	10	5,5	33,2	14,5	6,0	26,7	10,8	5	14	-30	80	15	22370.0152	22370.0292	22370.0432	22370.0812
	15	5,5	33,2	14,5	6,0	26,7	10,8	5	14	-30	80	15	22370.0153	22370.0293	22370.0433	22370.0813
	20	5,5	33,2	14,5	6,0	26,7	10,8	5	14	-30	80	16	22370.0154	22370.0294	22370.0434	22370.0814
	25	5,5	33,2	14,5	6,0	26,7	10,8	5	14	-30	80	17	22370.0155	22370.0295	22370.0435	22370.0815
	30	5,5	33,2	14,5	6,0	26,7	10,8	5	14	-30	80	18	22370.0156	22370.0296	22370.0436	22370.0816
	35	5,5	33,2	14,5	6,0	26,7	10,8	5	14	-30	80	19	22370.0145	22370.0285	22370.0425	22370.0805
	40	5,5	33,2	14,5	6,0	26,7	10,8	5	14	-30	80	20	22370.0146	22370.0286	22370.0426	22370.0806
	45	5,5	33,2	14,5	6,0	26,7	10,8	5	14	-30	80	21	22370.0147	22370.0287	22370.0427	22370.0807
	50	5,5	33,2	14,5	6,0	26,7	10,8	5	14	-30	80	23	22370.0148	22370.0288	22370.0428	22370.0808
	60	5,5	33,2	14,5	6,0	26,7	10,8	5	14	-30	80	24	22370.0149	22370.0289	22370.0429	22370.0809
	70	5,5	33,2	14,5	6,0	26,7	10,8	5	14	-30	80	18	22370.0150	22370.0290	22370.0430	22370.0810
	80	5,5	33,2	14,5	6,0	26,7	10,8	5	14	-30	80	19	22370.0151	22370.0291	22370.0431	22370.0811

[1] shearing resistance similar to DIN 50141 →

Dimensions								Location hole H11	Shearing resistance, double[1] min.				Art. No.			
d_1 -0,04 -0,08	l_1 +0,6	d_2	d_3	d_4	l_2 ±1	l_3	l_4			min.	max.		orange	grey	blue	black
[mm]								[mm]	[kN]	[°C]		[g]				
6	10	7,0	33,2	14,5	7,0	26,7	10,8	6	21	-30	80	16	22370.0162	22370.0302	22370.0442	22370.0822
	15	7,0	33,2	14,5	7,0	26,7	10,8	6	21	-30	80	17	22370.0163	22370.0303	22370.0443	22370.0823
	20	7,0	33,2	14,5	7,0	26,7	10,8	6	21	-30	80	18	22370.0164	22370.0304	22370.0444	22370.0824
	25	7,0	33,2	14,5	7,0	26,7	10,8	6	21	-30	80	19	22370.0165	22370.0305	22370.0445	22370.0825
	30	7,0	33,2	14,5	7,0	26,7	10,8	6	21	-30	80	20	22370.0166	22370.0306	22370.0446	22370.0826
	35	7,0	33,2	14,5	7,0	26,7	10,8	6	21	-30	80	21	22370.0167	22370.0307	22370.0447	22370.0827
	40	7,0	33,2	14,5	7,0	26,7	10,8	6	21	-30	80	22	22370.0168	22370.0308	22370.0448	22370.0828
	45	7,0	33,2	14,5	7,0	26,7	10,8	6	21	-30	80	23	22370.0169	22370.0309	22370.0449	22370.0829
	50	7,0	33,2	14,5	7,0	26,7	10,8	6	21	-30	80	24	22370.0170	22370.0310	22370.0450	22370.0830
	60	7,0	33,2	14,5	7,0	26,7	10,8	6	21	-30	80	26	22370.0157	22370.0297	22370.0437	22370.0817
	70	7,0	33,2	14,5	7,0	26,7	10,8	6	21	-30	80	28	22370.0158	22370.0298	22370.0438	22370.0818
	80	7,0	33,2	14,5	7,0	26,7	10,8	6	21	-30	80	30	22370.0159	22370.0299	22370.0439	22370.0819
8	10	9,6	39,2	18,4	8,2	33,3	13,4	8	38	-30	80	38	22370.0172	22370.0312	22370.0452	22370.0832
	15	9,6	39,2	18,4	8,2	33,3	13,4	8	38	-30	80	58	22370.0173	22370.0313	22370.0453	22370.0833
	20	9,6	39,2	18,4	8,2	33,3	13,4	8	38	-30	80	39	22370.0174	22370.0314	22370.0454	22370.0834
	25	9,6	39,2	18,4	8,2	33,3	13,4	8	38	-30	80	42	22370.0175	22370.0315	22370.0455	22370.0835
	30	9,6	39,2	18,4	8,2	33,3	13,4	8	38	-30	80	44	22370.0176	22370.0316	22370.0456	22370.0836
	35	9,6	39,2	18,4	8,2	33,3	13,4	8	38	-30	80	46	22370.0177	22370.0317	22370.0457	22370.0837
	40	9,6	39,2	18,4	8,2	33,3	13,4	8	38	-30	80	47	22370.0178	22370.0318	22370.0458	22370.0838
	45	9,6	39,2	18,4	8,2	33,3	13,4	8	38	-30	80	49	22370.0179	22370.0319	22370.0459	22370.0839
	50	9,6	39,2	18,4	8,2	33,3	13,4	8	38	-30	80	51	22370.0180	22370.0320	22370.0460	22370.0840
	60	9,6	39,2	18,4	8,2	33,3	13,4	8	38	-30	80	62	22370.0181	22370.0321	22370.0461	22370.0841
	70	9,6	39,2	18,4	8,2	33,3	13,4	8	38	-30	80	65	22370.0182	22370.0322	22370.0462	22370.0842
	80	9,6	39,2	18,4	8,2	33,3	13,4	8	38	-30	80	69	22370.0183	22370.0323	22370.0463	22370.0843
	90	9,6	39,2	18,4	8,2	33,3	13,4	8	38	-30	80	36	22370.0171	22370.0311	22370.0451	22370.0831
	100	9,6	39,2	18,4	8,2	33,3	13,4	8	38	-30	80	54	22370.0161	22370.0301	22370.0441	22370.0821
10	15	12,0	39,2	18,4	9,6	33,3	13,4	10	60	-30	80	86	22370.0191	22370.0331	22370.0471	22370.0851
	20	12,0	39,2	18,4	9,6	33,3	13,4	10	60	-30	80	47	22370.0184	22370.0324	22370.0464	22370.0844
	25	12,0	39,2	18,4	9,6	33,3	13,4	10	60	-30	80	49	22370.0185	22370.0325	22370.0465	22370.0845
	30	12,0	39,2	18,4	9,6	33,3	13,4	10	60	-30	80	53	22370.0186	22370.0326	22370.0466	22370.0846
	35	12,0	39,2	18,4	9,6	33,3	13,4	10	60	-30	80	55	22370.0187	22370.0327	22370.0467	22370.0847
	40	12,0	39,2	18,4	9,6	33,3	13,4	10	60	-30	80	57	22370.0188	22370.0328	22370.0468	22370.0848
	45	12,0	39,2	18,4	9,6	33,3	13,4	10	60	-30	80	61	22370.0189	22370.0329	22370.0469	22370.0849
	50	12,0	39,2	18,4	9,6	33,3	13,4	10	60	-30	80	64	22370.0190	22370.0330	22370.0470	22370.0850
	60	12,0	39,2	18,4	9,6	33,3	13,4	10	60	-30	80	70	22370.0192	22370.0332	22370.0472	22370.0852
	70	12,0	39,2	18,4	9,6	33,3	13,4	10	60	-30	80	91	22370.0193	22370.0333	22370.0473	22370.0853
	80	12,0	39,2	18,4	9,6	33,3	13,4	10	60	-30	80	97	22370.0194	22370.0334	22370.0474	22370.0854
	90	12,0	39,2	18,4	9,6	33,3	13,4	10	60	-30	80	103	22370.0195	22370.0335	22370.0475	22370.0855
	100	12,0	39,2	18,4	9,6	33,3	13,4	10	60	-30	80	109	22370.0196	22370.0336	22370.0476	22370.0856
	110	12,0	39,2	18,4	9,6	33,3	13,4	10	60	-30	80	115	22370.0197	22370.0337	22370.0477	22370.0857
	120	12,0	39,2	18,4	9,6	33,3	13,4	10	60	-30	80	53	22370.0198	22370.0338	22370.0478	22370.0858
12	20	14,5	47,6	25,2	10,6	39,7	16,7	12	87	-30	80	156	22370.0204	22370.0344	22370.0484	22370.0864
	25	14,5	47,6	25,2	10,6	39,7	16,7	12	87	-30	80	96	22370.0205	22370.0345	22370.0485	22370.0865
	30	14,5	47,6	25,2	10,6	39,7	16,7	12	87	-30	80	100	22370.0206	22370.0346	22370.0486	22370.0866
	35	14,5	47,6	25,2	10,6	39,7	16,7	12	87	-30	80	105	22370.0207	22370.0347	22370.0487	22370.0867
	40	14,5	47,6	25,2	10,6	39,7	16,7	12	87	-30	80	109	22370.0208	22370.0348	22370.0488	22370.0868
	45	14,5	47,6	25,2	10,6	39,7	16,7	12	87	-30	80	113	22370.0209	22370.0349	22370.0489	22370.0869
	50	14,5	47,6	25,2	10,6	39,7	16,7	12	87	-30	80	117	22370.0210	22370.0350	22370.0490	22370.0870
	60	14,5	47,6	25,2	10,6	39,7	16,7	12	87	-30	80	126	22370.0212	22370.0352	22370.0492	22370.0872
	70	14,5	47,6	25,2	10,6	39,7	16,7	12	87	-30	80	134	22370.0214	22370.0354	22370.0494	22370.0874
	80	14,5	47,6	25,2	10,6	39,7	16,7	12	87	-30	80	143	22370.0216	22370.0356	22370.0496	22370.0876
	90	14,5	47,6	25,2	10,6	39,7	16,7	12	87	-30	80	165	22370.0217	22370.0357	22370.0497	22370.0877
	100	14,5	47,6	25,2	10,6	39,7	16,7	12	87	-30	80	173	22370.0218	22370.0358	22370.0498	22370.0878
	110	14,5	47,6	25,2	10,6	39,7	16,7	12	87	-30	80	182	22370.0219	22370.0359	22370.0499	22370.0879
	120	14,5	47,6	25,2	10,6	39,7	16,7	12	87	-30	80	177	22370.0220	22370.0360	22370.0500	22370.0880

[1] shearing resistance similar to DIN 50141

→

Dimensions								Location hole H11	Shearing resistance, double[1] min.				Art. No.			
d_1 -0,04 -0,08	l_1 +0,6	d_2	d_3	d_4	l_2 ±1	l_3	l_4			min.	max.		orange	grey	blue	black
[mm]								[mm]	[kN]	[°C]		[g]				
16	**30**	19,0	47,6	25,2	14,0	39,7	16,7	16	155	-30	80	132	22370.0226	22370.0366	22370.0506	22370.0886
	35	19,0	47,6	25,2	14,0	39,7	16,7	16	155	-30	80	140	22370.0227	22370.0367	22370.0507	22370.0887
	40	19,0	47,6	25,2	14,0	39,7	16,7	16	155	-30	80	148	22370.0228	22370.0368	22370.0508	22370.0888
	45	19,0	47,6	25,2	14,0	39,7	16,7	16	155	-30	80	155	22370.0229	22370.0369	22370.0509	22370.0889
	50	19,0	47,6	25,2	14,0	39,7	16,7	16	155	-30	80	168	22370.0230	22370.0370	22370.0510	22370.0890
	60	19,0	47,6	25,2	14,0	39,7	16,7	16	155	-30	80	178	22370.0232	22370.0372	22370.0512	22370.0892
	70	19,0	47,6	25,2	14,0	39,7	16,7	16	155	-30	80	194	22370.0234	22370.0374	22370.0514	22370.0894
	80	19,0	47,6	25,2	14,0	39,7	16,7	16	155	-30	80	208	22370.0236	22370.0376	22370.0516	22370.0896
	90	19,0	47,6	25,2	14,0	39,7	16,7	16	155	-30	80	234	22370.0237	22370.0377	22370.0517	22370.0897
	100	19,0	47,6	25,2	14,0	39,7	16,7	16	155	-30	80	251	22370.0238	22370.0378	22370.0518	22370.0898
	110	19,0	47,6	25,2	14,0	39,7	16,7	16	155	-30	80	266	22370.0239	22370.0379	22370.0519	22370.0899
	120	19,0	47,6	25,2	14,0	39,7	16,7	16	155	-30	80	281	22370.0240	22370.0380	22370.0520	22370.0900
	130	19,0	47,6	25,2	14,0	39,7	16,7	16	155	-30	80	297	22370.0241	22370.0381	22370.0521	22370.0901
	140	19,0	47,6	25,2	14,0	39,7	16,7	16	155	-30	80	313	22370.0242	22370.0382	22370.0522	22370.0902
	150	19,0	47,6	25,2	14,0	39,7	16,7	16	155	-30	80	328	22370.0243	22370.0383	22370.0523	22370.0903
20	**50**	25,0	57,1	33,8	20,5	50,7	21,5	20	244	-30	80	329	22370.0251	22370.0391	22370.0531	22370.0905
	60	25,0	57,1	33,8	20,5	50,7	21,5	20	244	-30	80	343	22370.0252	22370.0392	22370.0532	22370.0904
	70	25,0	57,1	33,8	20,5	50,7	21,5	20	244	-30	80	377	22370.0253	22370.0393	22370.0533	22370.0906
	80	25,0	57,1	33,8	20,5	50,7	21,5	20	244	-30	80	392	22370.0256	22370.0396	22370.0536	22370.0908
	90	25,0	57,1	33,8	20,5	50,7	21,5	20	244	-30	80	426	22370.0257	22370.0397	22370.0537	22370.0909
	100	25,0	57,1	33,8	20,5	50,7	21,5	20	244	-30	80	440	22370.0260	22370.0400	22370.0540	22370.0912
	110	25,0	57,1	33,8	20,5	50,7	21,5	20	244	-30	80	474	22370.0261	22370.0401	22370.0541	22370.0913
	120	25,0	57,1	33,8	20,5	50,7	21,5	20	244	-30	80	488	22370.0264	22370.0404	22370.0544	22370.0916
	130	25,0	57,1	33,8	20,5	50,7	21,5	20	244	-30	80	523	22370.0265	22370.0405	22370.0545	22370.0917
	140	25,0	57,1	33,8	20,5	50,7	21,5	20	244	-30	80	546	22370.0266	22370.0406	22370.0546	22370.0918
	150	25,0	57,1	33,8	20,5	50,7	21,5	20	244	-30	80	571	22370.0267	22370.0407	22370.0547	22370.0919
25	**50**	30,8	57,1	33,8	22,0	50,7	21,5	25	386	-30	80	415	22370.0269	22370.0409	22370.0549	22370.0921
	60	30,8	57,1	33,8	22,0	50,7	21,5	25	386	-30	80	453	22370.0270	22370.0410	22370.0550	22370.0922
	70	30,8	57,1	33,8	22,0	50,7	21,5	25	386	-30	80	490	22370.0271	22370.0411	22370.0551	22370.0923
	80	30,8	57,1	33,8	22,0	50,7	21,5	25	386	-30	80	528	22370.0272	22370.0412	22370.0552	22370.0924
	90	30,8	57,1	33,8	22,0	50,7	21,5	25	386	-30	80	565	22370.0273	22370.0413	22370.0553	22370.0925
	100	30,8	57,1	33,8	22,0	50,7	21,5	25	386	-30	80	603	22370.0274	22370.0414	22370.0554	22370.0926
	110	30,8	57,1	33,8	22,0	50,7	21,5	25	386	-30	80	640	22370.0275	22370.0415	22370.0555	22370.0927
	120	30,8	57,1	33,8	22,0	50,7	21,5	25	386	-30	80	690	22370.0276	22370.0416	22370.0556	22370.0928
	130	30,8	57,1	33,8	22,0	50,7	21,5	25	386	-30	80	715	22370.0277	22370.0417	22370.0557	22370.0929
	140	30,8	57,1	33,8	22,0	50,7	21,5	25	386	-30	80	753	22370.0278	22370.0418	22370.0558	22370.0930
	150	30,8	57,1	33,8	22,0	50,7	21,5	25	386	-30	80	790	22370.0279	22370.0419	22370.0559	22370.0931

[1] shearing resistance similar to DIN 50141

APPLICATION EXAMPLE

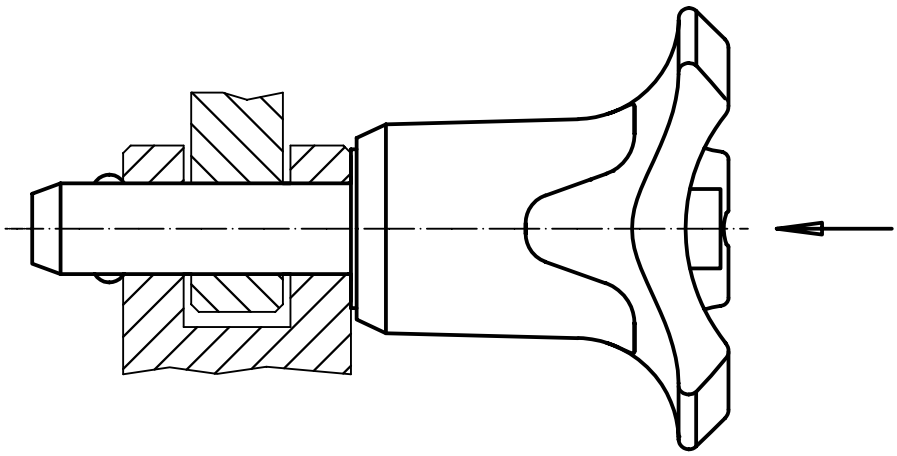

2

Ball Lock Pins • self-locking, with combination handle, precipitation-hardened

EH 22380.

PRODUCT DESCRIPTION

For quick fastening, locking, adjusting, changing and securing. Quickly and easily unlockable for frequently repeated connections.
All versions are corrosion resistant. When using stainless steel 1.4542: high-strength, hardened, abrasion resistant pin with high load capacity.
Ergonomic grip, different colour combinations available. The grip design provides protection of unintentional unlocking.

Material

Pin part
- Stainless steel 1.4542, precipitation hardened

Handle
- Thermoplastic PA 6 grey / orange
- Thermoplastic PA 6 grey / grey
- Thermoplastic PA 6 grey / blue
- Thermoplastic PA 6 black / black

Spring
- Stainless steel

Operation

The balls are unlocked by pressing the knob.

Characteristic

Types from stainless steel 1.4542 with marking below the balls.

MORE INFORMATION

Notes
Special types on request.

References
Stainless steel 1.4305, see EH 22370.

Accessories
Can easily be fitted with retaining cable EH 22400.

Further products
Ball Lock Pins, self-locking, with combination handle . . . . . → p. 225
Locating Bushings, for ball lock pins and socket pins . . . . . → p. 234
Locating Bushings, with flange, for ball lock pins and socket pins. . . . . → p. 236
Retaining Cables . . . . . → p. 237
Positioning Bushings, with collar, DIN 172 A . . . . . → p. 401
Positioning Bushings, without collar, DIN 179 A . . . . . → p. 404

DRAWING

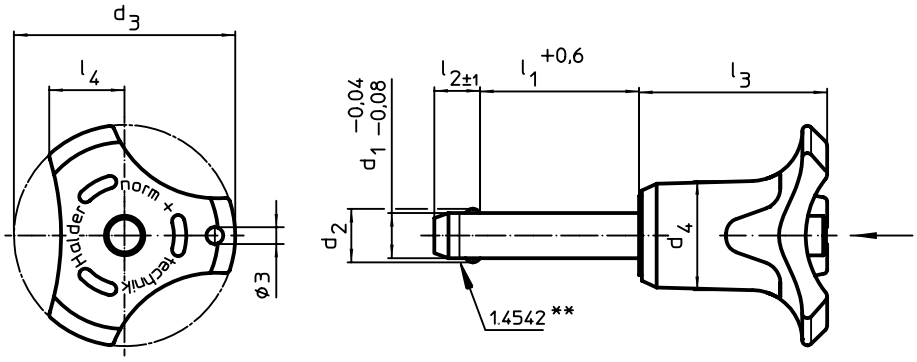

** Types from stainless steel 1.4542 with marking.

ORDER INFORMATION

Dimensions								Location hole	Shearing resistance, double[1]				Art. No.			
d_1 -0,04 -0,08	l_1 +0,6	d_2	d_3	d_4	l_2 ±1	l_3	l_4	H11	min.	min.	max.		orange	grey	blue	black
[mm]								[mm]	[kN]	[°C]		[g]				
5	10	5,5	33,2	14,5	6,0	26,7	10,8	5	24	-30	80	15	22380.0152	22380.0292	22380.0432	22380.0812
	15	5,5	33,2	14,5	6,0	26,7	10,8	5	24	-30	80	15	22380.0153	22380.0293	22380.0433	22380.0813
	20	5,5	33,2	14,5	6,0	26,7	10,8	5	24	-30	80	16	22380.0154	22380.0294	22380.0434	22380.0814
	25	5,5	33,2	14,5	6,0	26,7	10,8	5	24	-30	80	17	22380.0155	22380.0295	22380.0435	22380.0815
	30	5,5	33,2	14,5	6,0	26,7	10,8	5	24	-30	80	18	22380.0156	22380.0296	22380.0436	22380.0816
	35	5,5	33,2	14,5	6,0	26,7	10,8	5	24	-30	80	19	22380.0145	22380.0285	22380.0425	22380.0805
	40	5,5	33,2	14,5	6,0	26,7	10,8	5	24	-30	80	20	22380.0146	22380.0286	22380.0426	22380.0806
	45	5,5	33,2	14,5	6,0	26,7	10,8	5	24	-30	80	21	22380.0147	22380.0287	22380.0427	22380.0807
	50	5,5	33,2	14,5	6,0	26,7	10,8	5	24	-30	80	23	22380.0148	22380.0288	22380.0428	22380.0808
	60	5,5	33,2	14,5	6,0	26,7	10,8	5	24	-30	80	24	22380.0149	22380.0289	22380.0429	22380.0809
	70	5,5	33,2	14,5	6,0	26,7	10,8	5	24	-30	80	18	22380.0150	22380.0290	22380.0430	22380.0810
	80	5,5	33,2	14,5	6,0	26,7	10,8	5	24	-30	80	19	22380.0151	22380.0291	22380.0431	22380.0811

[1] shearing resistance similar to DIN 50141 →

Dimensions								Location hole H11	Shearing resistance, double[1] min.				Art. No.			
d_1 -0,04 -0,08	l_1 +0,6	d_2	d_3	d_4	l_2 ±1	l_3	l_4			min.	max.		orange	grey	blue	black
[mm]								[mm]	[kN]	[°C]		[g]				
6	10	7,0	33,2	14,5	7,0	26,7	10,8	6	35	-30	80	16	22380.0162	22380.0302	22380.0442	22380.0822
	15	7,0	33,2	14,5	7,0	26,7	10,8	6	35	-30	80	17	22380.0163	22380.0303	22380.0443	22380.0823
	20	7,0	33,2	14,5	7,0	26,7	10,8	6	35	-30	80	18	22380.0164	22380.0304	22380.0444	22380.0824
	25	7,0	33,2	14,5	7,0	26,7	10,8	6	35	-30	80	19	22380.0165	22380.0305	22380.0445	22380.0825
	30	7,0	33,2	14,5	7,0	26,7	10,8	6	35	-30	80	20	22380.0166	22380.0306	22380.0446	22380.0826
	35	7,0	33,2	14,5	7,0	26,7	10,8	6	35	-30	80	21	22380.0167	22380.0307	22380.0447	22380.0827
	40	7,0	33,2	14,5	7,0	26,7	10,8	6	35	-30	80	22	22380.0168	22380.0308	22380.0448	22380.0828
	45	7,0	33,2	14,5	7,0	26,7	10,8	6	35	-30	80	23	22380.0169	22380.0309	22380.0449	22380.0829
	50	7,0	33,2	14,5	7,0	26,7	10,8	6	35	-30	80	24	22380.0170	22380.0310	22380.0450	22380.0830
	60	7,0	33,2	14,5	7,0	26,7	10,8	6	35	-30	80	26	22380.0157	22380.0297	22380.0437	22380.0817
	70	7,0	33,2	14,5	7,0	26,7	10,8	6	35	-30	80	28	22380.0158	22380.0298	22380.0438	22380.0818
	80	7,0	33,2	14,5	7,0	26,7	10,8	6	35	-30	80	30	22380.0159	22380.0299	22380.0439	22380.0819
8	10	9,6	39,2	18,4	8,2	33,3	13,4	8	63	-30	80	38	22380.0172	22380.0312	22380.0452	22380.0832
	15	9,6	39,2	18,4	8,2	33,3	13,4	8	63	-30	80	58	22380.0173	22380.0313	22380.0453	22380.0833
	20	9,6	39,2	18,4	8,2	33,3	13,4	8	63	-30	80	40	22380.0174	22380.0314	22380.0454	22380.0834
	25	9,6	39,2	18,4	8,2	33,3	13,4	8	63	-30	80	42	22380.0175	22380.0315	22380.0455	22380.0835
	30	9,6	39,2	18,4	8,2	33,3	13,4	8	63	-30	80	44	22380.0176	22380.0316	22380.0456	22380.0836
	35	9,6	39,2	18,4	8,2	33,3	13,4	8	63	-30	80	46	22380.0177	22380.0317	22380.0457	22380.0837
	40	9,6	39,2	18,4	8,2	33,3	13,4	8	63	-30	80	47	22380.0178	22380.0318	22380.0458	22380.0838
	45	9,6	39,2	18,4	8,2	33,3	13,4	8	63	-30	80	49	22380.0179	22380.0319	22380.0459	22380.0839
	50	9,6	39,2	18,4	8,2	33,3	13,4	8	63	-30	80	51	22380.0180	22380.0320	22380.0460	22380.0840
	60	9,6	39,2	18,4	8,2	33,3	13,4	8	63	-30	80	62	22380.0181	22380.0321	22380.0461	22380.0841
	70	9,6	39,2	18,4	8,2	33,3	13,4	8	63	-30	80	65	22380.0182	22380.0322	22380.0462	22380.0842
	80	9,6	39,2	18,4	8,2	33,3	13,4	8	63	-30	80	69	22380.0183	22380.0323	22380.0463	22380.0843
	90	9,6	39,2	18,4	8,2	33,3	13,4	8	63	-30	80	36	22380.0171	22380.0311	22380.0451	22380.0831
	100	9,6	39,2	18,4	8,2	33,3	13,4	8	63	-30	80	54	22380.0161	22380.0301	22380.0441	22380.0821
10	15	12,0	39,2	18,4	9,6	33,3	13,4	10	100	-30	80	86	22380.0191	22380.0331	22380.0471	22380.0851
	20	12,0	39,2	18,4	9,6	33,3	13,4	10	100	-30	80	47	22380.0184	22380.0324	22380.0464	22380.0844
	25	12,0	39,2	18,4	9,6	33,3	13,4	10	100	-30	80	49	22380.0185	22380.0325	22380.0465	22380.0845
	30	12,0	39,2	18,4	9,6	33,3	13,4	10	100	-30	80	51	22380.0186	22380.0326	22380.0466	22380.0846
	35	12,0	39,2	18,4	9,6	33,3	13,4	10	100	-30	80	55	22380.0187	22380.0327	22380.0467	22380.0847
	40	12,0	39,2	18,4	9,6	33,3	13,4	10	100	-30	80	58	22380.0188	22380.0328	22380.0468	22380.0848
	45	12,0	39,2	18,4	9,6	33,3	13,4	10	100	-30	80	61	22380.0189	22380.0329	22380.0469	22380.0849
	50	12,0	39,2	18,4	9,6	33,3	13,4	10	100	-30	80	64	22380.0190	22380.0330	22380.0470	22380.0850
	60	12,0	39,2	18,4	9,6	33,3	13,4	10	100	-30	80	70	22380.0192	22380.0332	22380.0472	22380.0852
	70	12,0	39,2	18,4	9,6	33,3	13,4	10	100	-30	80	91	22380.0193	22380.0333	22380.0473	22380.0853
	80	12,0	39,2	18,4	9,6	33,3	13,4	10	100	-30	80	97	22380.0194	22380.0334	22380.0474	22380.0854
	90	12,0	39,2	18,4	9,6	33,3	13,4	10	100	-30	80	103	22380.0195	22380.0335	22380.0475	22380.0855
	100	12,0	39,2	18,4	9,6	33,3	13,4	10	100	-30	80	109	22380.0196	22380.0336	22380.0476	22380.0856
	110	12,0	39,2	18,4	9,6	33,3	13,4	10	100	-30	80	115	22380.0197	22380.0337	22380.0477	22380.0857
	120	12,0	39,2	18,4	9,6	33,3	13,4	10	100	-30	80	53	22380.0198	22380.0338	22380.0478	22380.0858
12	20	14,5	47,6	25,2	10,6	39,7	16,7	12	144	-30	80	156	22380.0204	22380.0344	22380.0484	22380.0864
	25	14,5	47,6	25,2	10,6	39,7	16,7	12	144	-30	80	96	22380.0205	22380.0345	22380.0485	22380.0865
	30	14,5	47,6	25,2	10,6	39,7	16,7	12	144	-30	80	100	22380.0206	22380.0346	22380.0486	22380.0866
	35	14,5	47,6	25,2	10,6	39,7	16,7	12	144	-30	80	105	22380.0207	22380.0347	22380.0487	22380.0867
	40	14,5	47,6	25,2	10,6	39,7	16,7	12	144	-30	80	109	22380.0208	22380.0348	22380.0488	22380.0868
	45	14,5	47,6	25,2	10,6	39,7	16,7	12	144	-30	80	113	22380.0209	22380.0349	22380.0489	22380.0869
	50	14,5	47,6	25,2	10,6	39,7	16,7	12	144	-30	80	117	22380.0210	22380.0350	22380.0490	22380.0870
	60	14,5	47,6	25,2	10,6	39,7	16,7	12	144	-30	80	126	22380.0212	22380.0352	22380.0492	22380.0872
	70	14,5	47,6	25,2	10,6	39,7	16,7	12	144	-30	80	134	22380.0214	22380.0354	22380.0494	22380.0874
	80	14,5	47,6	25,2	10,6	39,7	16,7	12	144	-30	80	143	22380.0216	22380.0356	22380.0496	22380.0876
	90	14,5	47,6	25,2	10,6	39,7	16,7	12	144	-30	80	165	22380.0217	22380.0357	22380.0497	22380.0877
	100	14,5	47,6	25,2	10,6	39,7	16,7	12	144	-30	80	173	22380.0218	22380.0358	22380.0498	22380.0878
	110	14,5	47,6	25,2	10,6	39,7	16,7	12	144	-30	80	182	22380.0219	22380.0359	22380.0499	22380.0879
	120	14,5	47,6	25,2	10,6	39,7	16,7	12	144	-30	80	177	22380.0220	22380.0360	22380.0500	22380.0880

[1] shearing resistance similar to DIN 50141

→

Dimensions								Location hole H11	Shearing resistance, double[1] min.				Art. No.			
d_1 -0,04 -0,08	l_1 +0,6	d_2	d_3	d_4	l_2 ±1	l_3	l_4			min.	max.		orange	grey	blue	black
[mm]								[mm]	[kN]	[°C]		[g]				
16	30	19,0	47,6	25,2	14,0	39,7	16,7	16	257	-30	80	132	22380.0226	22380.0366	22380.0506	22380.0886
	35	19,0	47,6	25,2	14,0	39,7	16,7	16	257	-30	80	140	22380.0227	22380.0367	22380.0507	22380.0887
	40	19,0	47,6	25,2	14,0	39,7	16,7	16	257	-30	80	148	22380.0228	22380.0368	22380.0508	22380.0888
	45	19,0	47,6	25,2	14,0	39,7	16,7	16	257	-30	80	155	22380.0229	22380.0369	22380.0509	22380.0889
	50	19,0	47,6	25,2	14,0	39,7	16,7	16	257	-30	80	168	22380.0230	22380.0370	22380.0510	22380.0890
	60	19,0	47,6	25,2	14,0	39,7	16,7	16	257	-30	80	178	22380.0232	22380.0372	22380.0512	22380.0892
	70	19,0	47,6	25,2	14,0	39,7	16,7	16	257	-30	80	194	22380.0234	22380.0374	22380.0514	22380.0894
	80	19,0	47,6	25,2	14,0	39,7	16,7	16	257	-30	80	208	22380.0236	22380.0376	22380.0516	22380.0896
	90	19,0	47,6	25,2	14,0	39,7	16,7	16	257	-30	80	234	22380.0237	22380.0377	22380.0517	22380.0897
	100	19,0	47,6	25,2	14,0	39,7	16,7	16	257	-30	80	251	22380.0238	22380.0378	22380.0518	22380.0898
	110	19,0	47,6	25,2	14,0	39,7	16,7	16	257	-30	80	266	22380.0239	22380.0379	22380.0519	22380.0899
	120	19,0	47,6	25,2	14,0	39,7	16,7	16	257	-30	80	281	22380.0240	22380.0380	22380.0520	22380.0900
	130	19,0	47,6	25,2	14,0	39,7	16,7	16	257	-30	80	297	22380.0241	22380.0381	22380.0521	22380.0901
	140	19,0	47,6	25,2	14,0	39,7	16,7	16	257	-30	80	313	22380.0242	22380.0382	22380.0522	22380.0902
	150	19,0	47,6	25,2	14,0	39,7	16,7	16	257	-30	80	328	22380.0243	22380.0383	22380.0523	22380.0903
20	50	25,0	57,1	33,8	20,5	50,7	21,5	20	403	-30	80	329	22380.0251	22380.0391	22380.0531	22380.0905
	60	25,0	57,1	33,8	20,5	50,7	21,5	20	403	-30	80	343	22380.0252	22380.0392	22380.0532	22380.0904
	70	25,0	57,1	33,8	20,5	50,7	21,5	20	403	-30	80	377	22380.0253	22380.0393	22380.0533	22380.0906
	80	25,0	57,1	33,8	20,5	50,7	21,5	20	403	-30	80	392	22380.0256	22380.0396	22380.0536	22380.0908
	90	25,0	57,1	33,8	20,5	50,7	21,5	20	403	-30	80	426	22380.0257	22380.0397	22380.0537	22380.0909
	100	25,0	57,1	33,8	20,5	50,7	21,5	20	403	-30	80	440	22380.0260	22380.0400	22380.0540	22380.0912
	110	25,0	57,1	33,8	20,5	50,7	21,5	20	403	-30	80	474	22380.0261	22380.0401	22380.0541	22380.0913
	120	25,0	57,1	33,8	20,5	50,7	21,5	20	403	-30	80	488	22380.0264	22380.0404	22380.0544	22380.0916
	130	25,0	57,1	33,8	20,5	50,7	21,5	20	403	-30	80	523	22380.0265	22380.0405	22380.0545	22380.0917
	140	25,0	57,1	33,8	20,5	50,7	21,5	20	403	-30	80	546	22380.0266	22380.0406	22380.0546	22380.0918
	150	25,0	57,1	33,8	20,5	50,7	21,5	20	403	-30	80	571	22380.0267	22380.0407	22380.0547	22380.0919
25	50	30,8	57,1	33,8	22,0	50,7	21,5	25	631	-30	80	415	22380.0269	22380.0409	22380.0549	22380.0921
	60	30,8	57,1	33,8	22,0	50,7	21,5	25	631	-30	80	453	22380.0270	22380.0410	22380.0550	22380.0922
	70	30,8	57,1	33,8	22,0	50,7	21,5	25	631	-30	80	490	22380.0271	22380.0411	22380.0551	22380.0923
	80	30,8	57,1	33,8	22,0	50,7	21,5	25	631	-30	80	528	22380.0272	22380.0412	22380.0552	22380.0924
	90	30,8	57,1	33,8	22,0	50,7	21,5	25	631	-30	80	565	22380.0273	22380.0413	22380.0553	22380.0925
	100	30,8	57,1	33,8	22,0	50,7	21,5	25	631	-30	80	603	22380.0274	22380.0414	22380.0554	22380.0926
	110	30,8	57,1	33,8	22,0	50,7	21,5	25	631	-30	80	640	22380.0275	22380.0415	22380.0555	22380.0927
	120	30,8	57,1	33,8	22,0	50,7	21,5	25	631	-30	80	678	22380.0276	22380.0416	22380.0556	22380.0928
	130	30,8	57,1	33,8	22,0	50,7	21,5	25	631	-30	80	715	22380.0277	22380.0417	22380.0557	22380.0929
	140	30,8	57,1	33,8	22,0	50,7	21,5	25	631	-30	80	753	22380.0278	22380.0418	22380.0558	22380.0930
	150	30,8	57,1	33,8	22,0	50,7	21,5	25	631	-30	80	790	22380.0279	22380.0419	22380.0559	22380.0931

[1] shearing resistance similar to DIN 50141

APPLICATION EXAMPLE

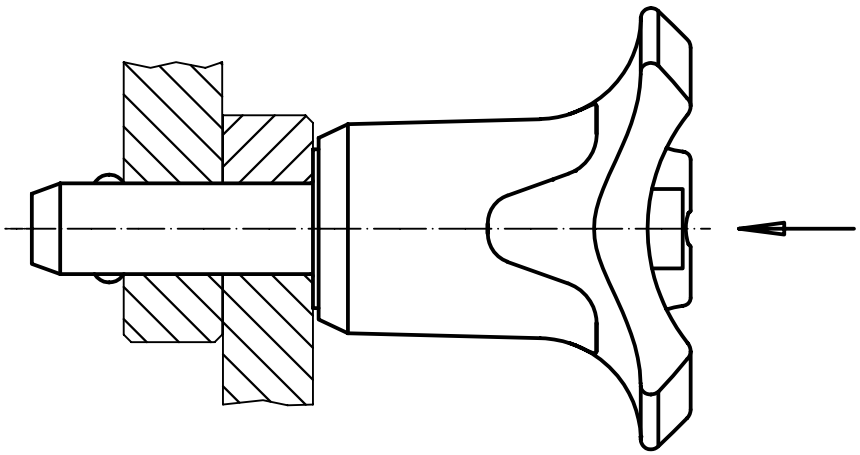

Ball Lock Pins • self-locking, with adjustable handle

EH 22370. /EH 22380.

PRODUCT DESCRIPTION

Used for mounting or clamping workpieces, remove remaining play or slack via variable locknuts.
All versions are corrosion resistant. When using stainless steel 1.4542: high-strength, hardened, abrasion resistant pin with high load capacity.

Material

Pin part
- Stainless steel 1.4305
- Stainless steel 1.4542, precipitation hardened

Lock nut
- Thermoplastic, black

Spring
- Stainless steel

Adjusting nut
- Thermoplastic, silver

Operation

The balls are unlocked by pressing the knob.

Characteristic

Types from stainless steel 1.4542 with marking below the balls.

MORE INFORMATION

Notes

Special types on request.

Accessories

Can easily be fitted with retaining cable EH 22400.

Further products

Locating Bushings, for ball lock pins and socket pins . . . . . → p. 234
Locating Bushings, with flange, for ball lock pins and socket pins. . . . . → p. 236
Retaining Cables . . . . . → p. 237
Positioning Bushings, with collar, DIN 172 A . . . . . → p. 401
Positioning Bushings, without collar, DIN 179 A . . . . . → p. 404

DRAWING

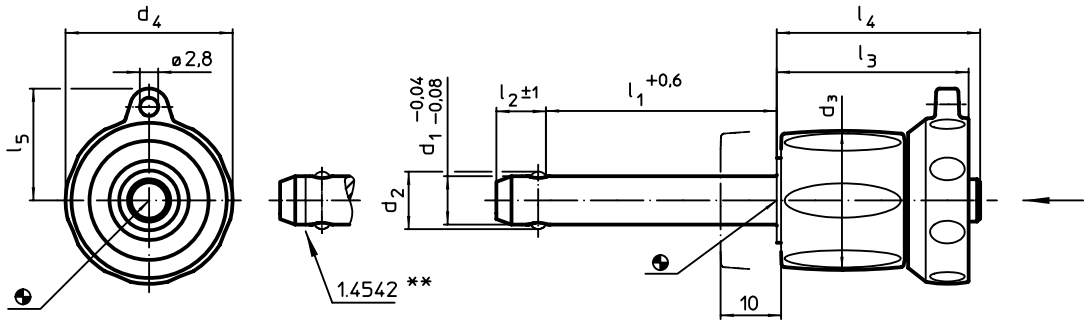

** types from stainless steel 1.4542 with marking.

ORDER INFORMATION

Dimensions									Location hole H11				Stainless steel 1.4305		Stainless steel 1.4542, precipitation-hardened	
d_1 -0,04 -0,08	l_1 +0,6	d_2	d_3	d_4	l_2 ±1	l_3	l_4	l_5		min.	max.		Shearing resistance, double[1] min.	Art. No.	Shearing resistance, double[1] min.	Art. No.
[mm]									[mm]	[°C]		[g]	[kN]		[kN]	
5	0 – 10	5,5	17,6	23,6	6,0	25,7	26,2	15,9	5	-30	80	24	14	22370.0592	24	22380.0592
	5 – 15	5,5	17,6	23,6	6,0	25,7	26,2	15,9	5	-30	80	25	14	22370.0593	24	22380.0593
	10 – 20	5,5	17,6	23,6	6,0	25,7	26,2	15,9	5	-30	80	26	14	22370.0594	24	22380.0594
	15 – 25	5,5	17,6	23,6	6,0	25,7	26,2	15,9	5	-30	80	27	14	22370.0595	24	22380.0595
	20 – 30	5,5	17,6	23,6	6,0	25,7	26,2	15,9	5	-30	80	27	14	22370.0596	24	22380.0596
6	0 – 10	7,0	17,6	23,6	7,0	25,7	26,2	15,9	6	-30	80	25	21	22370.0602	35	22380.0602
	5 – 15	7,0	17,6	23,6	7,0	25,7	26,2	15,9	6	-30	80	26	21	22370.0603	35	22380.0603
	10 – 20	7,0	17,6	23,6	7,0	25,7	26,2	15,9	6	-30	80	27	21	22370.0604	35	22380.0604
	15 – 25	7,0	17,6	23,6	7,0	25,7	26,2	15,9	6	-30	80	28	21	22370.0605	35	22380.0605
	20 – 30	7,0	17,6	23,6	7,0	25,7	26,2	15,9	6	-30	80	29	21	22370.0606	35	22380.0606
	25 – 35	7,0	17,6	23,6	7,0	25,7	26,2	15,9	6	-30	80	30	21	22370.0607	35	22380.0607
	30 – 40	7,0	17,6	23,6	7,0	25,7	26,2	15,9	6	-30	80	31	21	22370.0608	35	22380.0608
	35 – 45	7,0	17,6	23,6	7,0	25,7	26,2	15,9	6	-30	80	32	21	22370.0609	35	22380.0609
	40 – 50	7,0	17,6	23,6	7,0	25,7	26,2	15,9	6	-30	80	33	21	22370.0610	35	22380.0610

[1] shearing resistance similar to DIN 50141 →

Dimensions									Location hole H11				Stainless steel 1.4305		Stainless steel 1.4542, precipitation-hardened	
d_1 -0,04 -0,08	l_1 +0,6	d_2	d_3	d_4	l_2 ±1	l_3	l_4	l_5		min.	max.		Shearing resistance, double[1] min.	Art. No.	Shearing resistance, double[1] min.	Art. No.
[mm]									[mm]	[°C]		[g]	[kN]		[kN]	
8	10 – 20	9,6	23,0	27,6	8,2	31,2	33,1	18,0	8	-30	80	57	38	22370.0614	63	22380.0614
	15 – 25	9,6	23,0	27,6	8,2	31,2	33,1	18,0	8	-30	80	58	38	22370.0615	63	22380.0615
	20 – 30	9,6	23,0	27,6	8,2	31,2	33,1	18,0	8	-30	80	60	38	22370.0616	63	22380.0616
	25 – 35	9,6	23,0	27,6	8,2	31,2	33,1	18,0	8	-30	80	62	38	22370.0617	63	22380.0617
	30 – 40	9,6	23,0	27,6	8,2	31,2	33,1	18,0	8	-30	80	64	38	22370.0618	63	22380.0618
	35 – 45	9,6	23,0	27,6	8,2	31,2	33,1	18,0	8	-30	80	66	38	22370.0619	63	22380.0619
	40 – 50	9,6	23,0	27,6	8,2	31,2	33,1	18,0	8	-30	80	68	38	22370.0620	63	22380.0620
10	10 – 20	12,0	23,0	27,6	9,6	31,2	33,1	18,0	10	-30	80	63	60	22370.0624	100	22380.0624
	15 – 25	12,0	23,0	27,6	9,6	31,2	33,1	18,0	10	-30	80	66	60	22370.0625	100	22380.0625
	20 – 30	12,0	23,0	27,6	9,6	31,2	33,1	18,0	10	-30	80	69	60	22370.0626	100	22380.0626
	25 – 35	12,0	23,0	27,6	9,6	31,2	33,1	18,0	10	-30	80	72	60	22370.0627	100	22380.0627
	30 – 40	12,0	23,0	27,6	9,6	31,2	33,1	18,0	10	-30	80	75	60	22370.0628	100	22380.0628
	35 – 45	12,0	23,0	27,6	9,6	31,2	33,1	18,0	10	-30	80	78	60	22370.0629	100	22380.0629
	40 – 50	12,0	23,0	27,6	9,6	31,2	33,1	18,0	10	-30	80	81	60	22370.0630	100	22380.0630
	50 – 60	12,0	23,0	27,6	9,6	31,2	33,1	18,0	10	-30	80	87	60	22370.0632	100	22380.0632
12	15 – 25	14,5	29,0	34,6	10,6	36,7	39,5	21,8	12	-30	80	123	87	22370.0635	144	22380.0635
	20 – 30	14,5	29,0	34,6	10,6	36,7	39,5	21,8	12	-30	80	127	87	22370.0636	144	22380.0636
	25 – 35	14,5	29,0	34,6	10,6	36,7	39,5	21,8	12	-30	80	131	87	22370.0637	144	22380.0637
	30 – 40	14,5	29,0	34,6	10,6	36,7	39,5	21,8	12	-30	80	135	87	22370.0638	144	22380.0638
	35 – 45	14,5	29,0	34,6	10,6	36,7	39,5	21,8	12	-30	80	140	87	22370.0639	144	22380.0639
	40 – 50	14,5	29,0	34,6	10,6	36,7	39,5	21,8	12	-30	80	144	87	22370.0640	144	22380.0640
	50 – 60	14,5	29,0	34,6	10,6	36,7	39,5	21,8	12	-30	80	152	87	22370.0642	144	22380.0642
	60 – 70	14,5	29,0	34,6	10,6	36,7	39,5	21,8	12	-30	80	161	87	22370.0644	144	22380.0644
	70 – 80	14,5	29,0	34,6	10,6	36,7	39,5	21,8	12	-30	80	169	87	22370.0646	144	22380.0646
16	20 – 30	19,0	29,0	34,6	14,0	36,7	39,5	21,8	16	-30	80	159	155	22370.0656	257	22380.0656
	25 – 35	19,0	29,0	34,6	14,0	36,7	39,5	21,8	16	-30	80	166	155	22370.0657	257	22380.0657
	30 – 40	19,0	29,0	34,6	14,0	36,7	39,5	21,8	16	-30	80	174	155	22370.0658	257	22380.0658
	35 – 45	19,0	29,0	34,6	14,0	36,7	39,5	21,8	16	-30	80	182	155	22370.0659	257	22380.0659
	40 – 50	19,0	29,0	34,6	14,0	36,7	39,5	21,8	16	-30	80	189	155	22370.0660	257	22380.0660
	50 – 60	19,0	29,0	34,6	14,0	36,7	39,5	21,8	16	-30	80	205	155	22370.0662	257	22380.0662
	60 – 70	19,0	29,0	34,6	14,0	36,7	39,5	21,8	16	-30	80	220	155	22370.0664	257	22380.0664
	70 – 80	19,0	29,0	34,6	14,0	36,7	39,5	21,8	16	-30	80	235	155	22370.0666	257	22380.0666

[1] shearing resistance similar to DIN 50141

APPLICATION EXAMPLE

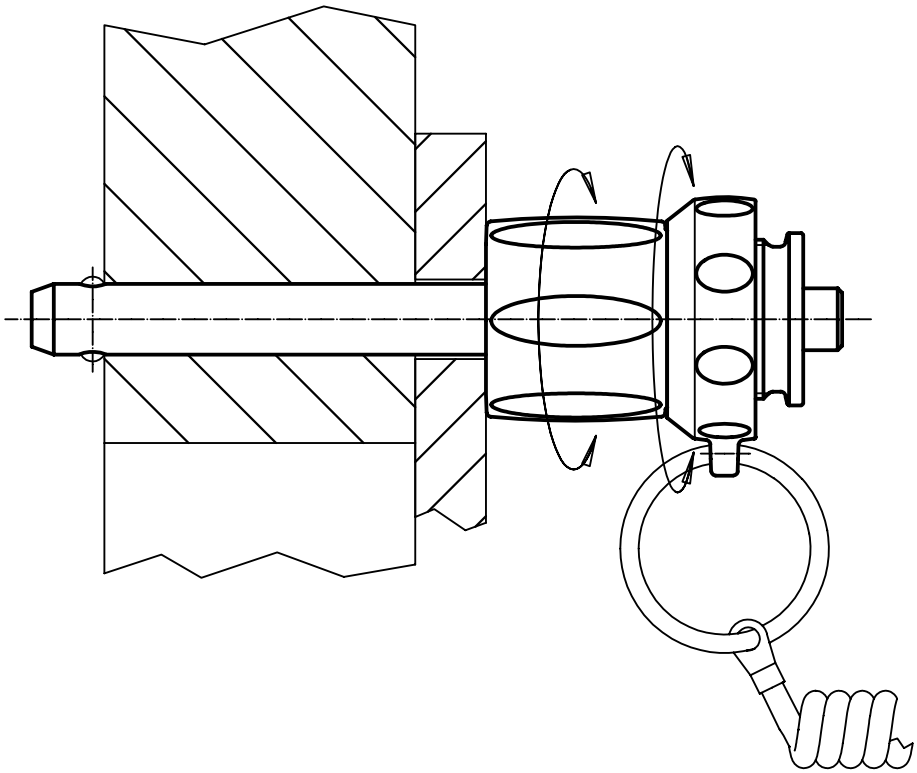

Socket Pins • with spring-loaded balls

EH 22400.

PRODUCT DESCRIPTION

For quick fastening, locking, adjusting, changing and securing. Quickly and easily unlockable for frequently repeated connections.
All versions are corrosion resistant.
Version with ergonomic grip.

Material

Pin part
- Stainless steel 1.4305

Handle
- Thermoplastic PA 6, grey

Spring
- Stainless steel

MORE INFORMATION

Notes

Security Note: balls are spring-loaded and not locked as in article groups EH 22340., EH 22350., EH 22360., EH 22370. and EH 22380.

Accessories

Can easily be fitted with retaining cable EH 22400.

Further products

Locating Bushings, for ball lock pins and socket pins . . . . . → p. 234
Locating Bushings, with flange, for ball lock pins and socket pins. . . . . → p. 236
Retaining Cables . . . . . → p. 237
Positioning Bushings, with collar, DIN 172 A. . . . . → p. 401
Positioning Bushings, without collar, DIN 179 A . . . . . → p. 404

DRAWING

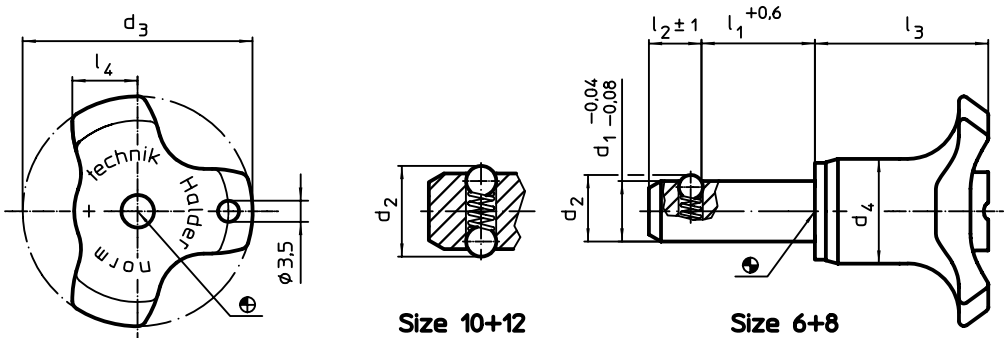

ORDER INFORMATION

Dimensions								Location hole H11	Shearing resistance, double	Tensile force max.				Art. No.
d_1 -0,04 -0,08	l_1 +0,6	d_2	d_3	d_4	l_2 ±1	l_3	l_4			unlubricated	min.	max.		
[mm]								[mm]	[kN]	[N]	[°C]		[g]	
6	10	6,5	38	17,3	5,0	27,0	10,8	6	22	8	-30	80	14	22400.0062
	15	6,5	38	17,3	5,0	27,0	10,8	6	22	8	-30	80	16	22400.0064
	20	6,5	38	17,3	5,0	27,0	10,8	6	22	8	-30	80	16	22400.0066
	25	6,5	38	17,3	5,0	27,0	10,8	6	22	8	-30	80	17	22400.0068
	30	6,5	38	17,3	5,0	27,0	10,8	6	22	8	-30	80	18	22400.0070
	50	6,5	38	17,3	5,0	27,0	10,8	6	22	8	-30	80	23	22400.0075
8	15	8,7	38	17,3	6,3	28,6	10,8	8	40	15	-30	80	21	22400.0084
	20	8,7	38	17,3	6,3	28,6	10,8	8	40	15	-30	80	22	22400.0086
	25	8,7	38	17,3	6,3	28,6	10,8	8	40	15	-30	80	25	22400.0088
	30	8,7	38	17,3	6,3	28,6	10,8	8	40	15	-30	80	27	22400.0090
	50	8,7	38	17,3	6,3	28,6	10,8	8	40	15	-30	80	33	22400.0095
10	15	12,0	38	17,3	8,7	28,6	10,8	10	62	30	-30	80	32	22400.0104
	20	12,0	38	17,3	8,7	28,6	10,8	10	62	30	-30	80	35	22400.0106
	25	12,0	38	17,3	8,7	28,6	10,8	10	62	30	-30	80	38	22400.0108
	30	12,0	38	17,3	8,7	28,6	10,8	10	62	30	-30	80	39	22400.0110
	50	12,0	38	17,3	8,7	28,6	10,8	10	62	30	-30	80	53	22400.0115
12	20	14,5	38	17,3	9,5	28,6	10,8	12	90	32	-30	80	43	22400.0122
	30	14,5	38	17,3	9,5	28,6	10,8	12	90	32	-30	80	52	22400.0124
	40	14,5	38	17,3	9,5	28,6	10,8	12	90	32	-30	80	61	22400.0126
	50	14,5	38	17,3	9,5	28,6	10,8	12	90	32	-30	80	68	22400.0128

2

Locating Bushings • for ball lock pins and socket pins

EH 22400.

PRODUCT DESCRIPTION

This design with holes on the front face (picture 2) is suitable for applications which require installation flush to the surface.
Locating bushings are used for quick and safe locating of ball lock pins EH 22340., EH 22350., EH 22370. and EH 22380. and socket pins EH 22400.
Optimised centering due to precise collar (e.g. quick mounting of plates and components).
All versions are corrosion and abrasion resistant.

Material

- Stainless steel 1.4305

Assembly

This design with holes on the front face (picture 2) can be installed via a cranked pin face wrench or alternatively via a pin faced socket wrench.
Ensure safe tolerances and consistent function. Easily incorporable into different materials. Can be used in thin-walled pieces. Application from both sides.

DRAWING

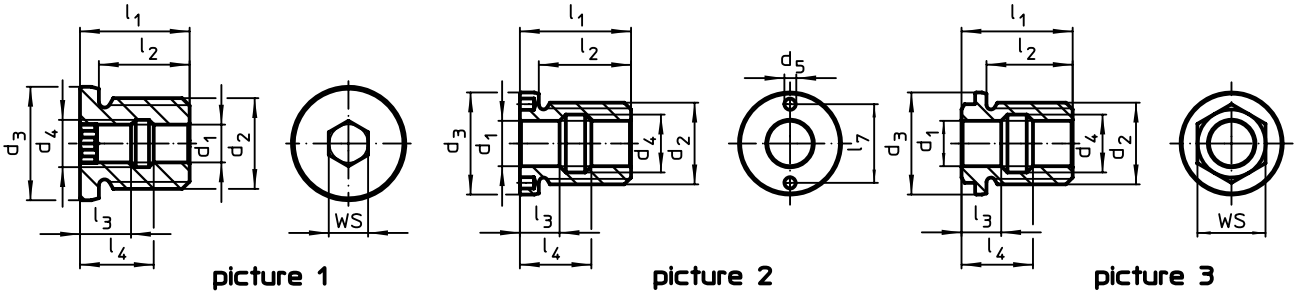

ORDER INFORMATION

Dimensions												WS		Art. No.
d_1 H11	d_2	d_3 h9	d_4	d_5 +0,1	l_1	l_2	l_3	l_4	l_5	l_6	l_7			
[mm]												[mm]	[g]	
with internal hexagon – picture 1														
5	**M12**	18	6,0	–	19	15	9,0	13,0	5,1	9,0	–	5	15	22400.0905
6	**M12**	18	7,5	–	19	15	9,4	13,0	5,6	8,8	–	6	13	22400.0906
8	**M16**	22	10,0	–	25	20	12,0	17,0	7,3	11,7	–	8	29	22400.0908
10	**M24**	30	12,5	–	29	24	13,5	19,5	8,9	14,1	–	10	75	22400.0910
12	**M24**	30	15,0	–	29	24	14,0	20,0	9,6	14,4	–	12	66	22400.0912
plain, with face hole – picture 2														
16	**M30**	39	19,5	5,1	39	33	15,5	23,5	10,4	16,6	30	–	160	22400.0925
20	**M36**	43	25,5	5,1	49	42	17,5	31,5	11,9	23,1	30	–	257	22400.0926
25	**M42**	50	32,0	5,1	65	57	26,5	38,5	13,3	21,8	36	–	434	22400.0927
with outer hexagon – picture 3														
16	**M30**	36	19,5	–	39	29	15,5	23,5	6,1	12,8	–	24	124	22400.0916
20	**M36**	45	25,5	–	49	38	17,5	31,5	7,7	19,3	–	30	208	22400.0920
25	**M42**	50	32,0	–	65	50	26,5	38,5	13,3	21,8	–	36	415	22400.0924

ACCESSORIES

	Suitable for size d_1 [mm]	For finish picture	Pin spacing ±0,1 [mm]	Pin diameter -0,1 [mm]	Square drive [inch]	[g]	Art. No.
adjustable face wrench, offset							
	16/20/25	2	–	5		309	22350.1991
face wrench (socket wrench insert)							
	16/20	2	30	5	1/2	243	22350.1998
	25	2	36	5	1/2	363	22350.1999

APPLICATION EXAMPLE

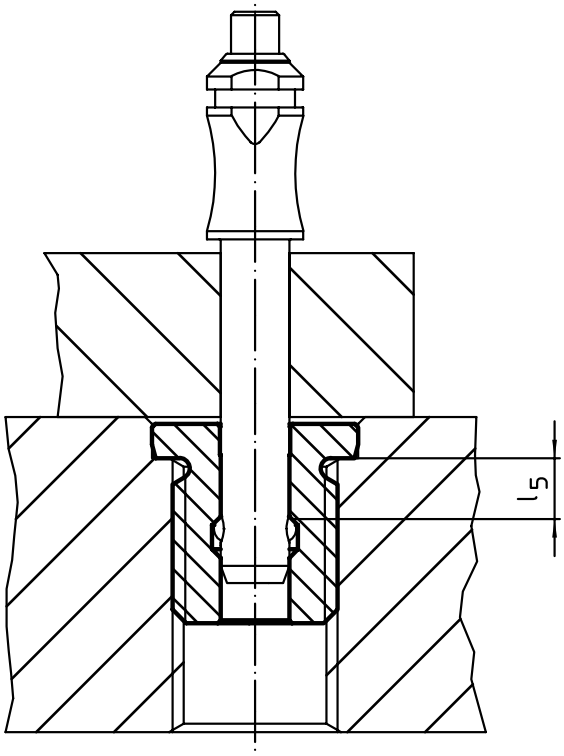

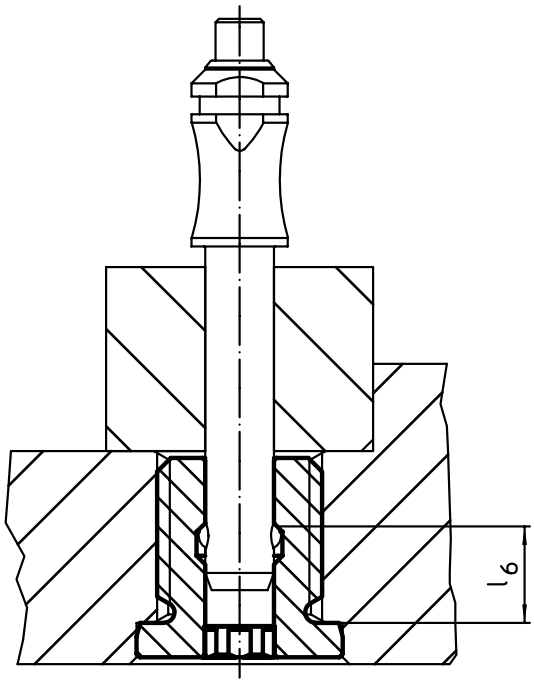

2

Locating Bushings • with flange, for ball lock pins and socket pins

EH 22400.

PRODUCT DESCRIPTION

Used for thin sheet materials, e.g. in vehicle construction, apparatus engineering, container construction and the aviation industry.
Locating bushings are used for quick and safe locating of ball lock pins EH 22340., EH 22350., EH 22370. and EH 22380. and socket pins EH 22400.
The contact surface of the flange ensures optimum force distribution at components with thin walls.
All versions are corrosion and abrasion resistant.

Material

- Stainless steel 1.4305

DRAWING

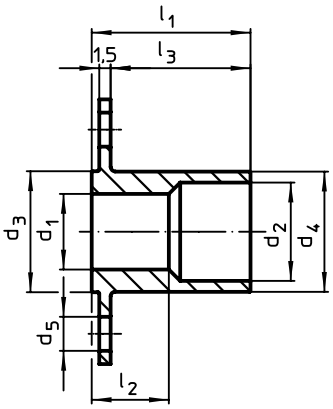

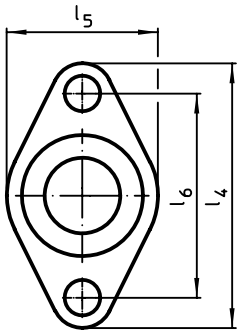

picture 1

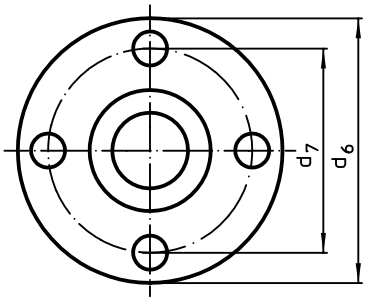

picture 2

ORDER INFORMATION

Dimensions														Art. No.
d_1 H11	d_2	d_3 -0,05	d_4 -0,1	d_5	d_6	d_7	l_1	l_2	l_3	l_4	l_5	l_6		
[mm]													[g]	
with oval flange – picture 1														
5	**8**	10	9,9	3,4	–	–	12	5,4	9,5	25	15	19	6	22400.0305
6	**8**	10	9,9	3,4	–	–	13	5,3	10,5	25	15	19	6	22400.0306
8	**10**	12	11,9	4,5	–	–	19	10,3	16,5	30	18	22	10	22400.0308
10	**13**	16	15,9	4,5	–	–	21	10,2	18,5	35	20	27	19	22400.0310
12	**15**	19	18,9	4,5	–	–	27	15,2	24,5	40	24	30	34	22400.0312
16	**20**	24	23,9	5,5	–	–	30	15,3	27,5	50	30	40	52	22400.0316
with round flange – picture 2														
5	**8**	10	9,9	3,4	25	19	12	5,4	9,5	–	–	–	9	22400.0405
6	**8**	10	9,9	3,4	25	19	13	5,3	10,5	–	–	–	9	22400.0406
8	**10**	12	11,9	4,5	30	22	19	10,3	16,5	–	–	–	14	22400.0408
10	**13**	16	15,9	4,5	35	27	21	10,2	18,5	–	–	–	24	22400.0410
12	**15**	19	18,9	4,5	40	30	27	15,2	24,5	–	–	–	41	22400.0412
16	**20**	24	23,9	5,5	50	40	30	15,3	27,5	–	–	–	63	22400.0416

APPLICATION EXAMPLE

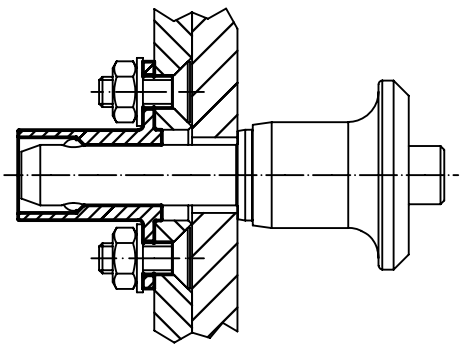

Retaining Cables

EH 22400.

PRODUCT DESCRIPTION

These retaining cables secure the single-acting ball lock pin EH 22340., EH 22350., EH 22370. and EH 22380., as well as clamping pin EH 22360., and socket pin EH 22400. against possible loss.

Material

Attaching ring
- Stainless steel

Ring
- Stainless steel
- Brass, tin-plated

Retaining cable
- Stainless steel
- Thermoplastic PA 6, grey
- Thermoplastic PUR, black, with filling thread

Coating retaining cable
- Without coating
- Thermoplastic PA 6 coated, black
- Thermoplastic PA 6 coated, clear
- Thermoplastic PVC coated, green (transparent)
- Thermoplastic PA 6, grey
- Thermoplastic PUR, black

Assembly

Attached holding clips (picture 5/6) to the ball lock pin with a soft-face mallet. Disassemble via levering it with a screw driver. Thermoplastic version (picture 7): cut-off projecting ends without burr after being fastened.
Spiral form design (picture 8) with very high effective working length.

MORE INFORMATION

Notes

Special types on request.
Models picture 3 and picture 4 correspond to MIL-DTL-83420.

DRAWING

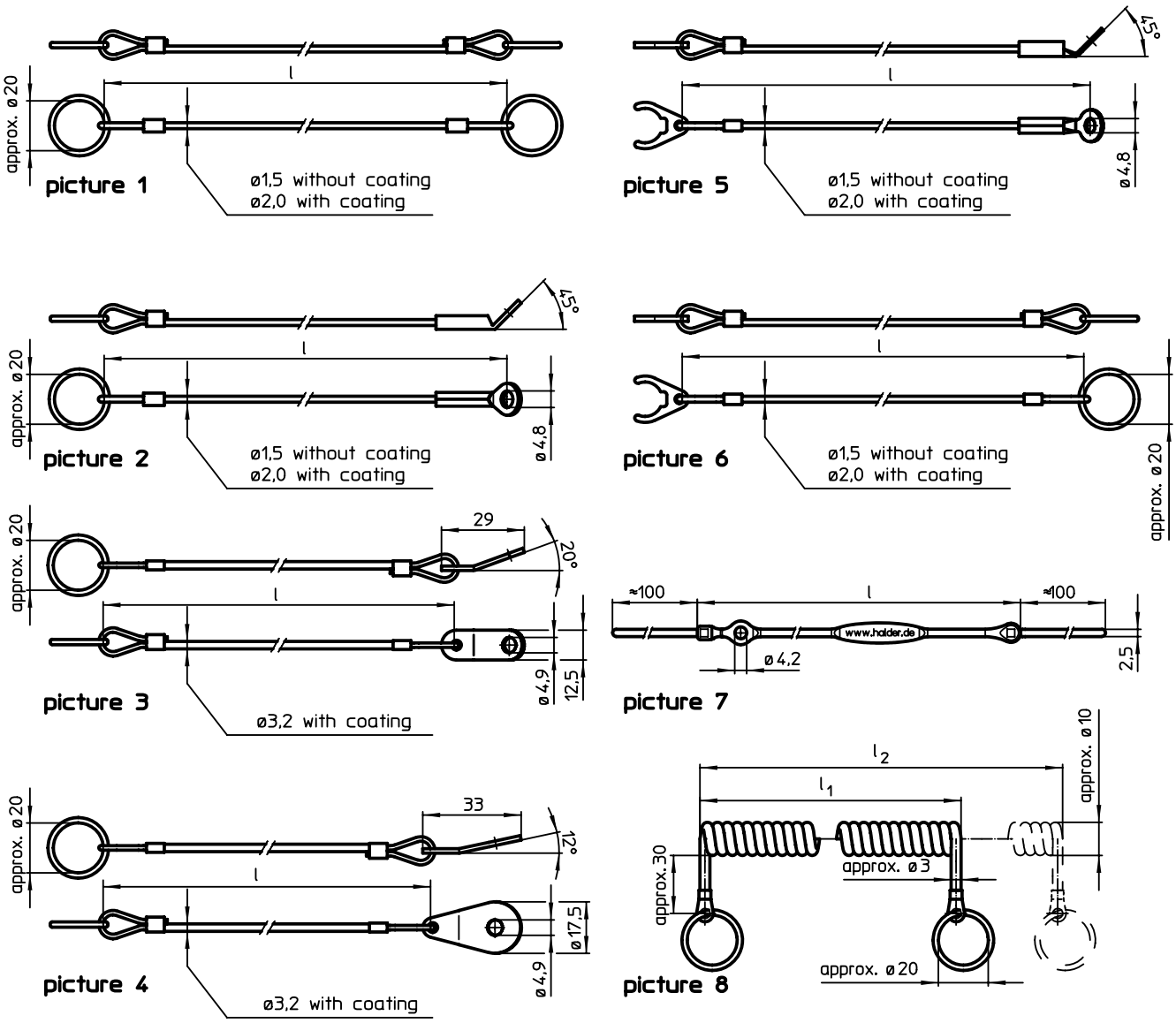

2

ORDER INFORMATION

Dimensions l [mm]	l_1 [mm]	l_2 max. [mm]	Suitable for size [mm]	max. [°C]	[g]	Art. No. Thermo-plastic PA 6 coated, black	Thermo-plastic PA 6 coated, clear	Without coating	Thermo-plastic PVC coated, green (trans-parent)	Thermo-plastic PA 6, grey	Thermo-plastic PUR, black
stainless steel, with 2 holding rings – picture 1											
150	–	–	–	80	6,5	22400.0940[1]	22400.0950[1]	–	–	–	–
				250	6,5	–	–	22400.0930[1]	–	–	–
200	–	–	–	80	6,4	22400.0941[1]	22400.0952[1]	–	–	–	–
				250	6,4	–	–	22400.0931[1]	–	–	–
300	–	–	–	80	7,5	22400.0943[1]	22400.0956[1]	–	–	–	–
				250	7,5	–	–	22400.0933[1]	–	–	–
stainless steel, with holding ring and loop to be screwed – picture 2											
150	–	–	–	80	6,9	22400.0945[1]	22400.0960[1]	–	–	–	–
				250	6,9	–	–	22400.0935[1]	–	–	–
200	–	–	–	80	7,6	22400.0946[1]	22400.0962[1]	–	–	–	–
				250	7,6	–	–	22400.0936[1]	–	–	–
300	–	–	–	80	8,6	22400.0948[1]	22400.0966[1]	–	–	–	–
				250	8,6	–	–	22400.0938[1]	–	–	–
stainless steel, with fixing tab, rectangular and attaching ring – picture 3											
150	–	–	–	80	13,0	–	–	–	22400.1301[1]	–	–
200	–	–	–	80	14,0	–	–	–	22400.1302[1]	–	–
300	–	–	–	80	16,0	–	–	–	22400.1303[1]	–	–
stainless steel, with fixing tab in drop shape and attaching ring – picture 4											
150	–	–	–	80	13,0	–	–	–	22400.1311[1]	–	–
200	–	–	–	80	14,0	–	–	–	22400.1312[1]	–	–
300	–	–	–	80	16,0	–	–	–	22400.1313[1]	–	–
stainless steel, with holding clip and eyelet – picture 5											
150	–	–	5/ 6	80	6,0	22400.1101[2]	22400.1001[2]	–	–	–	–
				250	6,0	–	–	22400.1201[2]	–	–	–
			8/10	80	7,0	22400.1121[2]	22400.1021[2]	–	–	–	–
				250	7,0	–	–	22400.1221[2]	–	–	–
			12/16	80	8,0	22400.1141[2]	22400.1041[2]	–	–	–	–
				250	8,0	–	–	22400.1241[2]	–	–	–
			20/25	80	12,0	22400.1161[2]	22400.1061[2]	–	–	–	–
				250	12,0	–	–	22400.1261[2]	–	–	–
200	–	–	5/ 6	80	7,0	22400.1102[2]	22400.1002[2]	–	–	–	–
				250	7,0	–	–	22400.1202[2]	–	–	–
			8/10	80	8,0	22400.1122[2]	22400.1022[2]	–	–	–	–
				250	8,0	–	–	22400.1222[2]	–	–	–
			12/16	80	9,0	22400.1142[2]	22400.1042[2]	–	–	–	–
				250	9,0	–	–	22400.1242[2]	–	–	–
			20/25	80	13,0	22400.1162[2]	22400.1062[2]	–	–	–	–
				250	13,0	–	–	22400.1262[2]	–	–	–
300	–	–	5/ 6	80	8,0	22400.1103[2]	22400.1003[2]	–	–	–	–
				250	8,0	–	–	22400.1203[2]	–	–	–
			8/10	80	9,0	22400.1123[2]	22400.1023[2]	–	–	–	–
				250	9,0	–	–	22400.1223[2]	–	–	–
			12/16	80	10,0	22400.1143[2]	22400.1043[2]	–	–	–	–
				250	10,0	–	–	22400.1243[2]	–	–	–
			20/25	80	14,0	22400.1163[2]	22400.1063[2]	–	–	–	–
				250	14,0	–	–	22400.1263[2]	–	–	–

[1] not for ball-lock pins, basic type
[2] for ball lock pins, basic type

Dimensions l [mm]	l_1 [mm]	l_2 max. [mm]	Suitable for size [mm]	max. [°C]	[g]	Art. No. Thermo-plastic PA 6 coated, black	Thermo-plastic PA 6 coated, clear	Without coating	Thermo-plastic PVC coated, green (trans-parent)	Thermo-plastic PA 6, grey	Thermo-plastic PUR, black
stainless steel, with holding clip and retaining ring – picture 6											
150	–	–	5/ 6	80	6,0	22400.1111[2]	22400.1011[2]	–	–	–	–
				250	6,0	–	–	22400.1211[2]	–	–	–
			8/10	80	7,0	22400.1131[2]	22400.1031[2]	–	–	–	–
				250	7,0	–	–	22400.1231[2]	–	–	–
			12/16	80	8,0	22400.1151[2]	22400.1051[2]	–	–	–	–
				250	8,0	–	–	22400.1251[2]	–	–	–
			20/25	80	12,0	22400.1171[2]	22400.1071[2]	–	–	–	–
				250	12,0	–	–	22400.1271[2]	–	–	–
200	–	–	5/ 6	80	7,0	22400.1112[2]	22400.1012[2]	–	–	–	–
				250	7,0	–	–	22400.1212[2]	–	–	–
			8/10	80	8,0	22400.1132[2]	22400.1032[2]	–	–	–	–
				250	8,0	–	–	22400.1232[2]	–	–	–
			12/16	80	9,0	22400.1152[2]	22400.1052[2]	–	–	–	–
				250	9,0	–	–	22400.1252[2]	–	–	–
			20/25	80	13,0	22400.1172[2]	22400.1072[2]	–	–	–	–
				250	13,0	–	–	22400.1272[2]	–	–	–
300	–	–	5/ 6	80	8,0	22400.1113[2]	22400.1013[2]	–	–	–	–
				250	8,0	–	–	22400.1213[2]	–	–	–
			8/10	80	9,0	22400.1133[2]	22400.1033[2]	–	–	–	–
				250	9,0	–	–	22400.1233[2]	–	–	–
			12/16	80	10,0	22400.1153[2]	22400.1053[2]	–	–	–	–
				250	10,0	–	–	22400.1253[2]	–	–	–
			20/25	80	14,0	22400.1173[2]	22400.1073[2]	–	–	–	–
				250	14,0	–	–	22400.1273[2]	–	–	–
with double sided clamping/indexing mechanism – picture 7											
150	–	–	–	80	2,1	–	–	–	–	22400.0970	–
250	–	–	–	80	2,7	–	–	–	–	22400.0974	–
spiral form, with fastening rings – picture 8											
–	**100**	**600**	–	80	11,5	–	–	–	–	–	22400.0980[1]
	200	**1200**	–	80	17,4	–	–	–	–	–	22400.0982[1]

[1] not for ball-lock pins, basic type
[2] for ball lock pins, basic type

2

APPLICATION EXAMPLE

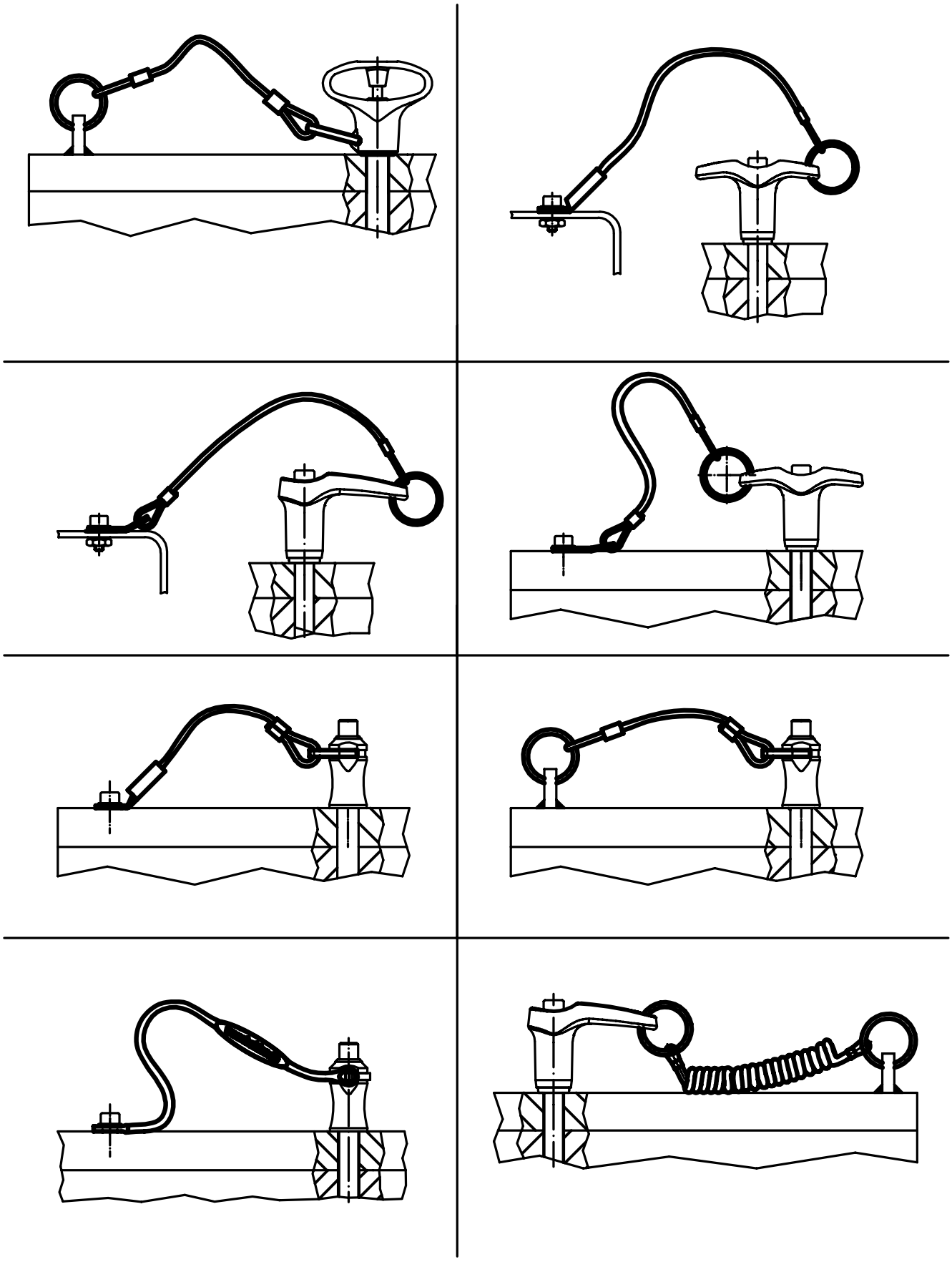

Clamp Lock Pins • with button handle

EH 22410. /EH 22420.

PRODUCT DESCRIPTION

For rapid fastening, locking, adjusting, replacing, and securing in blind holes (H11) without additional locating bushings.
Quick and easy to release for connections which are made repeatedly. Flexible use because the balls are clamped between bolt and hole.
All versions are corrosion resistant. When using stainless steel 1.4542: high-strength, hardened, abrasion resistant pin with high load capacity.

Material

Pin part
- Stainless steel 1.4305
- Stainless steel 1.4542, precipitation-hardened

Handle
- Aluminium, black similar to RAL 9005

Press button
- Stainless steel, yellow similar to RAL 1016

Spring
- Stainless steel

Assembly

Simple H11 boreholes are sufficient.

MORE INFORMATION

Notes

Special types on request.
The clamp lock pin must not be used for lifting loads.

Accessories

Can easily be fitted with retaining cable EH 22400.

Further products

Retaining Cables . . . . . → p. 237

DRAWING

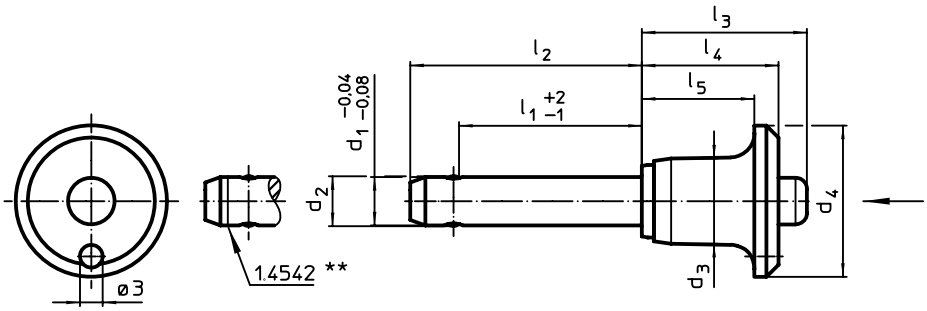

** Types from stainless steel 1.4542 with marking.

ORDER INFORMATION

Dimensions									Location hole H11				Stainless steel 1.4305		Stainless steel 1.4542, precipitation-hardened	
d_1 -0,04 +0,08	l_1 +2 +2	d_2 +0,1 -0,05	d_3	d_4	l_2 ±	l_3	l_4	l_5		min.	max.		Shearing resistance, double[1] min.	Art. No.	Shearing resistance, double[1] min.	Art. No.
[mm]									[mm]	[°C]		[g]	[kN]		[kN]	
6	10	6,2	11,3	20	17,4	20,7	17,6	14,6	6	-30	150	13	21	22410.0022	35	22420.0022
	20	6,2	11,3	20	27,4	20,7	17,6	14,6	6	-30	150	15	21	22410.0024	35	22420.0024
	40	6,2	11,3	20	47,4	20,7	17,6	14,6	6	-30	150	19	21	22410.0028	35	22420.0028
	60	6,2	11,3	20	67,4	20,7	17,6	14,6	6	-30	150	23	21	22410.0032	35	22420.0032
8	10	8,3	14,1	25	18,6	27,3	22,6	18,6	8	-30	150	25	38	22410.0042	63	22420.0042
	20	8,3	14,1	25	28,6	27,3	22,6	18,6	8	-30	150	28	38	22410.0044	63	22420.0044
	40	8,3	14,1	25	48,6	27,3	22,6	18,6	8	-30	150	36	38	22410.0048	63	22420.0048
	60	8,3	14,1	25	68,6	27,3	22,6	18,6	8	-30	150	43	38	22410.0052	63	22420.0052
	80	8,3	14,1	25	88,6	27,3	22,6	18,6	8	-30	150	51	38	22410.0056	63	22420.0056
10	20	10,3	14,1	25	30,0	27,3	22,6	18,6	10	-30	150	35	60	22410.0062	100	22420.0062
	40	10,3	14,1	25	50,0	27,3	22,6	18,6	10	-30	150	47	60	22410.0066	100	22420.0066
	60	10,3	14,1	25	70,0	27,3	22,6	18,6	10	-30	150	58	60	22410.0070	100	22420.0070
	80	10,3	14,1	25	100,0	27,3	22,6	18,6	10	-30	150	70	60	22410.0072	100	22420.0072
	100	10,3	14,1	25	120,0	27,3	22,6	18,6	10	-30	150	83	60	22410.0074	100	22420.0074

[1] shearing resistance similar to DIN 50141 →

Dimensions									Location hole H11				Stainless steel 1.4305		Stainless steel 1.4542, precipitation-hardened	
d_1 -0,04 +0,08	l_1 +2 +2	d_2 +0,1 -0,05	d_3	d_4	l_2 ±	l_3	l_4	l_5		min.	max.		Shearing resistance, double[1] min.	Art. No.	Shearing resistance, double[1] min.	Art. No.
[mm]									[mm]	[°C]		[g]	[kN]		[kN]	
12	20	12,3	17,7	35	51,0	33,2	27,3	22,3	12	-30	150	64	87	22410.0082	144	22420.0082
	40	12,3	17,7	35	71,0	33,2	27,3	22,3	12	-30	150	81	87	22410.0086	144	22420.0086
	60	12,3	17,7	35	91,0	33,2	27,3	22,3	12	-30	150	98	87	22410.0090	144	22420.0090
	80	12,3	17,7	35	111,0	33,2	27,3	22,3	12	-30	150	115	87	22410.0092	144	22420.0092
	100	12,3	17,7	35	131,0	33,2	27,3	22,3	12	-30	150	132	87	22410.0094	144	22420.0094
16	30	16,5	23,4	40	44,4	42,2	34,5	28,5	16	-30	150	144	155	22410.0102	257	22420.0102
	60	16,5	23,4	40	74,4	42,2	34,5	28,5	16	-30	150	190	155	22410.0107	257	22420.0107
	90	16,5	23,4	40	104,4	42,2	34,5	28,5	16	-30	150	236	155	22410.0110	257	22420.0110
	120	16,5	23,4	40	134,4	42,2	34,5	28,5	16	-30	150	282	155	22410.0113	257	22420.0113

[1] shearing resistance similar to DIN 50141

APPLICATION EXAMPLE

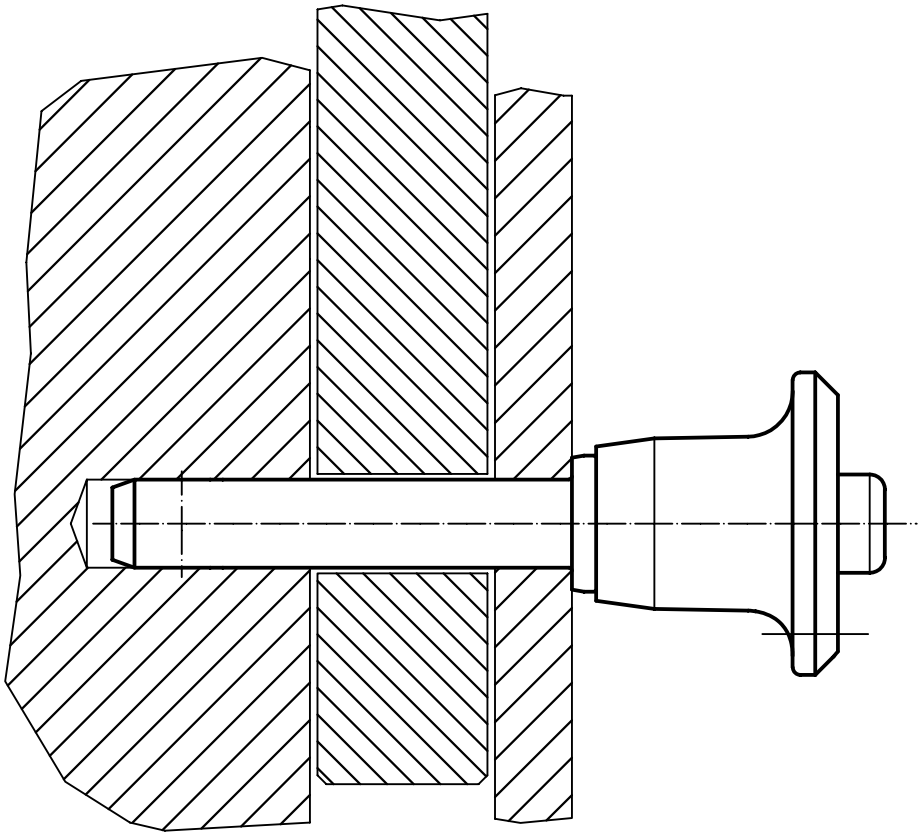

BALL LOCK PINS

SPECIAL TYPES

Almost all branches and sectors of industry rely on the power of ball lock pins - anywhere where connections need to be released and established again frequently and quickly.
With special solutions developed in-house, the requirements of various branches can be met, e.g. in motor sports, aviation or medical engineering.

www.halder.com/
BallLockPins-Video

2

BALL LOCK PINS

INCH PORTFOLIO – MOST CERTAINLY.

The aviation industry is one of the fastest growing markets on the planet. The factors of durability and safety play a key role in the manufacturing of aircraft components. Their long years of experience have turned Erwin Halder KG into the ideal partner of the aviation industry.

Keep track of our ongoing expansions by logging on to www.halder.aero.

Ball Lock Pins • single acting - complies with NASM / MS17984

EH 4210.

PRODUCT DESCRIPTION

Ball lock pins according to NASM (former norm: MS) are used for quick fastening, locking, adjusting, changing and securing. Quickly and easily unlockable for frequently repeated connections.
Ball lock pins (quick release pins) are produced according to Aviation Norm NASM (former norm: MS) and tested to NAS 1332.

Material

Pin ①
- Stainless steel, precipitation-hardened, passivated

Press bolt ②
- Stainless steel, precipitation-hardened, passivated

Spring ③
- Stainless steel, passivated

Handle ④
- Aluminium, black anodised

Attaching ring ⑤
- Stainless steel, passivated

Ball ⑥
- Stainless steel, precipitation-hardened, passivated

Operation

The balls are unlocked by pressing the knob.

MORE INFORMATION

Notes

All further dimensions are available on request.
Special types on request.
- This product is manufactured in INCH dimensions.

References

A conversion table can be found in the technical data following these product information pages.

DRAWING

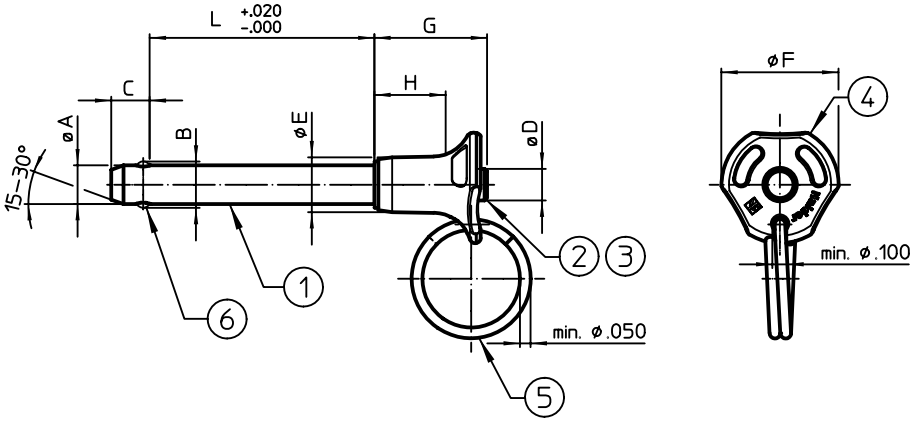

ORDER INFORMATION

Nominal diameter A	Clamping length L	Dimensions							Location hole max.	Shearing resistance, double[1] min.				Art. No.
		B ±0,005	C 0 -0,04	D max.	E max.	F max.	G max.	H min.			min.	max.		
[inch]	[inch]	[inch]							[inch]	[lb]	[°F]		[g]	
3/16	**0,5**	0,220	0,26	0,31	0,44	0,800	0,83	0,48	0,1940	5.150	-65	200	17	**4210.A05**
	0,6	0,220	0,26	0,31	0,44	0,800	0,83	0,48	0,1940	5.150	-65	200	17	**4210.A06**
	0,7	0,220	0,26	0,31	0,44	0,800	0,83	0,48	0,1940	5.150	-65	200	17	**4210.A07**
	0,8	0,220	0,26	0,31	0,44	0,800	0,83	0,48	0,1940	5.150	-65	200	18	**4210.A08**
	1,0	0,220	0,26	0,31	0,44	0,800	0,83	0,48	0,1940	5.150	-65	200	18	**4210.A10**
	1,1	0,220	0,26	0,31	0,44	0,800	0,83	0,48	0,1940	5.150	-65	200	19	**4210.A11**
	1,3	0,220	0,26	0,31	0,44	0,800	0,83	0,48	0,1940	5.150	-65	200	19	**4210.A13**
	1,5	0,220	0,26	0,31	0,44	0,800	0,83	0,48	0,1940	5.150	-65	200	20	**4210.A15**
	1,8	0,220	0,26	0,31	0,44	0,800	0,83	0,48	0,1940	5.150	-65	200	21	**4210.A18**
	2,0	0,220	0,26	0,31	0,44	0,800	0,83	0,48	0,1940	5.150	-65	200	20	**4210.A20**
	2,8	0,220	0,26	0,31	0,44	0,800	0,83	0,48	0,1940	5.150	-65	200	24	**4210.A28**

[1] shearing resistance similar to DIN 50141

→

Nominal diameter A	Clamping length L	Dimensions							Location hole	Shearing resistance, double[1]				Art. No.
	+0,02 0	B ±0,005	C 0 -0,04	D max.	E max.	F max.	G max.	H min.	max.	min.	min.	max.		
[inch]	[inch]	[inch]							[inch]	[lb]	[°F]		[g]	
1/4	**0,5**	0,289	0,29	0,31	0,44	0,800	0,89	0,48	0,2540	9.200	-65	200	19	4210.B05
	0,7	0,289	0,29	0,31	0,44	0,800	0,89	0,48	0,2540	9.200	-65	200	20	4210.B07
	0,8	0,289	0,29	0,31	0,44	0,800	0,89	0,48	0,2540	9.200	-65	200	18	4210.B08
	1,0	0,289	0,29	0,31	0,44	0,800	0,89	0,48	0,2540	9.200	-65	200	22	4210.B10
	1,1	0,289	0,29	0,31	0,44	0,800	0,89	0,48	0,2540	9.200	-65	200	22	4210.B11
	1,2	0,289	0,29	0,31	0,44	0,800	0,89	0,48	0,2540	9.200	-65	200	23	4210.B12
	1,4	0,289	0,29	0,31	0,44	0,800	0,89	0,48	0,2540	9.200	-65	200	24	4210.B14
	1,8	0,289	0,29	0,31	0,44	0,800	0,89	0,48	0,2540	9.200	-65	200	26	4210.B18
	1,9	0,289	0,29	0,31	0,44	0,800	0,89	0,48	0,2540	9.200	-65	200	27	4210.B19
	2,0	0,289	0,29	0,31	0,44	0,800	0,89	0,48	0,2540	9.200	-65	200	27	4210.B20
	2,3	0,289	0,29	0,31	0,44	0,800	0,89	0,48	0,2540	9.200	-65	200	29	4210.B23
	2,5	0,289	0,29	0,31	0,44	0,800	0,89	0,48	0,2540	9.200	-65	200	30	4210.B25
	2,8	0,289	0,29	0,31	0,44	0,800	0,89	0,48	0,2540	9.200	-65	200	32	4210.B28
	2,9	0,289	0,29	0,31	0,44	0,800	0,89	0,48	0,2540	9.200	-65	200	33	4210.B29
	6,4	0,289	0,29	0,31	0,44	0,800	0,89	0,48	0,2540	9.200	-65	200	59	4210.B64
5/16	**0,8**	0,375	0,33	0,31	0,49	1,135	0,93	0,48	0,3165	14.400	-65	200	25	4210.C08
	1,0	0,375	0,33	0,31	0,49	1,135	0,93	0,48	0,3165	14.400	-65	200	27	4210.C10
	1,2	0,375	0,33	0,31	0,49	1,135	0,93	0,48	0,3165	14.400	-65	200	29	4210.C12
	1,4	0,375	0,33	0,31	0,49	1,135	0,93	0,48	0,3165	14.400	-65	200	31	4210.C14
	1,6	0,375	0,33	0,31	0,49	1,135	0,93	0,48	0,3165	14.400	-65	200	33	4210.C16
	1,7	0,375	0,33	0,31	0,49	1,135	0,93	0,48	0,3165	14.400	-65	200	35	4210.C17
	1,9	0,375	0,33	0,31	0,49	1,135	0,93	0,48	0,3165	14.400	-65	200	33	4210.C19
	2,0	0,375	0,33	0,31	0,49	1,135	0,93	0,48	0,3165	14.400	-65	200	36	4210.C20
	2,2	0,375	0,33	0,31	0,49	1,135	0,93	0,48	0,3165	14.400	-65	200	38	4210.C22
	2,3	0,375	0,33	0,31	0,49	1,135	0,93	0,48	0,3165	14.400	-65	200	39	4210.C23
	2,5	0,375	0,33	0,31	0,49	1,135	0,93	0,48	0,3165	14.400	-65	200	43	4210.C25
	2,9	0,375	0,33	0,31	0,49	1,135	0,93	0,48	0,3165	14.400	-65	200	46	4210.C29
	3,0	0,375	0,33	0,31	0,49	1,135	0,93	0,48	0,3165	14.400	-65	200	47	4210.C30
	3,6	0,375	0,33	0,31	0,49	1,135	0,93	0,48	0,3165	14.400	-65	200	53	4210.C36
	4,9	0,375	0,33	0,31	0,49	1,135	0,93	0,48	0,3165	14.400	-65	200	990	4210.C49
	6,2	0,375	0,33	0,31	0,49	1,135	0,93	0,48	0,3165	14.400	-65	200	73	4210.C62
	6,7	0,375	0,33	0,31	0,49	1,135	0,93	0,48	0,3165	14.400	-65	200	85	4210.C67
3/8	**1,8**	0,440	0,36	0,39	0,57	1,135	1,04	0,62	0,3790	20.600	-65	200	60	4210.D18
	2,0	0,440	0,36	0,39	0,57	1,135	1,04	0,62	0,3790	20.600	-65	200	50	4210.D20
1/2	**2,0**	0,594	0,46	0,56	0,72	1,400	1,19	0,72	0,5050	36.800	-65	200	93	4210.F20
	6,0	0,594	0,46	0,56	0,72	1,400	1,19	0,72	0,5050	36.800	-65	200	197	4210.F60

[1] shearing resistance similar to DIN 50141

Ball Lock Pins • single acting - complies with NASM / MS17985

EH 4211.

PRODUCT DESCRIPTION

Ball lock pins according to NASM (former norm: MS) are used for quick fastening, locking, adjusting, changing and securing. Quickly and easily unlockable for frequently repeated connections.
Ball lock pins (quick release pins) are produced according to Aviation Norm NASM (former norm: MS) and tested to NAS 1332.

Material

Pin ①
- Stainless steel, precipitation-hardened, passivated

Press bolt ②
- Stainless steel, precipitation-hardened, passivated

Spring ③
- Stainless steel, passivated

Handle ④
- Aluminium, black anodised

Attaching ring ⑤
- Stainless steel, passivated

Ball ⑥
- Stainless steel, precipitation-hardened, passivated

Operation

The balls are unlocked by pressing the knob.

MORE INFORMATION

Notes

Special types on request.
All further dimensions are available on request.
- This product is manufactured in INCH dimensions.

References

A conversion table can be found in the technical data following these product information pages.

DRAWING

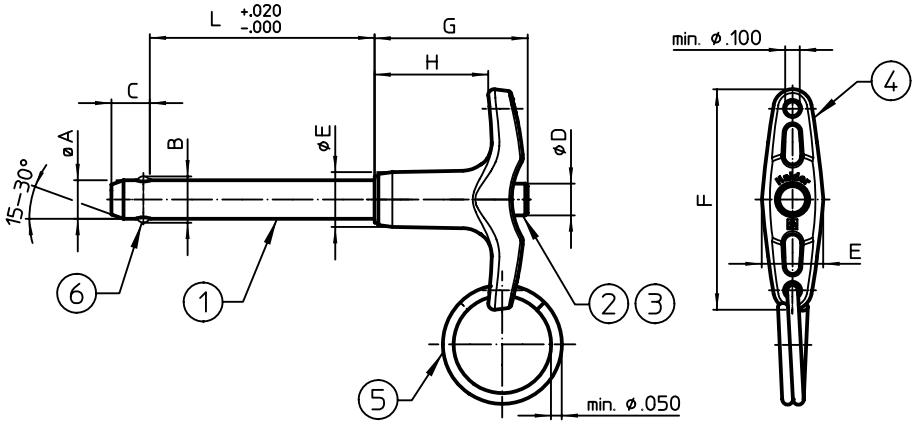

ORDER INFORMATION

Nominal diameter A	Clamping length L	Dimensions							Location hole	Shearing resistance, double[1]				Art. No.
	+0,02 0	B ±0,005	C 0 -0,04	D max.	E max.	F max.	G max.	H min.	max.	min.	min.	max.		
[inch]	[inch]	[inch]							[inch]	[lb]	[°F]		[g]	
3/16	**2,3**	0,220	0,260	0,310	0,500	1,815	1,27	0,800	0,1940	5.150	-65	200	30	4211.A23
	0,3	0,220	0,260	0,310	0,500	1,815	1,27	0,800	0,1940	5.150	-65	200	24	4211.A03
	0,5	0,220	0,260	0,310	0,500	1,815	1,27	0,800	0,1940	5.150	-65	200	24	4211.A05
	0,8	0,220	0,260	0,310	0,500	1,815	1,27	0,800	0,1940	5.150	-65	200	25	4211.A08
	1,2	0,220	0,260	0,310	0,500	1,815	1,27	0,800	0,1940	5.150	-65	200	26	4211.A12
	1,3	0,220	0,260	0,310	0,500	1,815	1,27	0,800	0,1940	5.150	-65	200	27	4211.A13
	1,4	0,220	0,260	0,310	0,500	1,815	1,27	0,800	0,1940	5.150	-65	200	27	4211.A14
	2,6	0,220	0,260	0,310	0,500	1,815	1,27	0,800	0,1940	5.150	-65	200	33	4211.A26

[1] shearing resistance similar to DIN 50141

→

Nominal diameter A	Clamping length L +0,02 0	Dimensions B ±0,005	C 0 -0,04	D max.	E max.	F max.	G max.	H min.	Location hole max.	Shearing resistance, double[1] min.	min.	max.		Art. No.
[inch]	[inch]	[inch]							[inch]	[lb]	[°F]		[g]	
1/4	0,5	0,289	0,290	0,310	0,500	1,815	1,27	0,800	0,2540	9.200	-65	200	26	4211.B05
	0,7	0,289	0,290	0,310	0,500	1,815	1,27	0,800	0,2540	9.200	-65	200	28	4211.B07
	0,9	0,289	0,290	0,310	0,500	1,815	1,27	0,800	0,2540	9.200	-65	200	29	4211.B09
	1,0	0,289	0,290	0,310	0,500	1,815	1,27	0,800	0,2540	9.200	-65	200	29	4211.B10
	1,1	0,289	0,290	0,310	0,500	1,815	1,27	0,800	0,2540	9.200	-65	200	30	4211.B11
	1,2	0,289	0,290	0,310	0,500	1,815	1,27	0,800	0,2540	9.200	-65	200	31	4211.B12
	1,3	0,289	0,290	0,310	0,500	1,815	1,27	0,800	0,2540	9.200	-65	200	31	4211.B13
	1,5	0,289	0,290	0,310	0,500	1,815	1,27	0,800	0,2540	9.200	-65	200	32	4211.B15
	1,6	0,289	0,290	0,310	0,500	1,815	1,27	0,800	0,2540	9.200	-65	200	33	4211.B16
	2,1	0,289	0,290	0,310	0,500	1,815	1,27	0,800	0,2540	9.200	-65	200	36	4211.B21
	2,6	0,289	0,290	0,310	0,500	1,815	1,27	0,800	0,2540	9.200	-65	200	40	4211.B26
	2,8	0,289	0,290	0,310	0,500	1,815	1,27	0,800	0,2540	9.200	-65	200	41	4211.B28
	4,0	0,289	0,290	0,310	0,500	1,815	1,27	0,800	0,2540	9.200	-65	200	48	4211.B40
5/16	0,3	0,375	0,330	0,310	0,500	1,815	1,27	0,800	0,3165	14.400	-65	200	27	4211.C03
	0,6	0,375	0,330	0,310	0,500	1,815	1,27	0,800	0,3165	14.400	-65	200	30	4211.C06
	0,9	0,375	0,330	0,310	0,500	1,815	1,27	0,800	0,3165	14.400	-65	200	33	4211.C09
	1,0	0,375	0,330	0,310	0,500	1,815	1,27	0,800	0,3165	14.400	-65	200	34	4211.C10
	1,1	0,375	0,330	0,310	0,500	1,815	1,27	0,800	0,3165	14.400	-65	200	35	4211.C11
	1,3	0,375	0,330	0,310	0,500	1,815	1,27	0,800	0,3165	14.400	-65	200	36	4211.C13
	1,5	0,375	0,330	0,310	0,500	1,815	1,27	0,800	0,3165	14.400	-65	200	38	4211.C15
	1,6	0,375	0,330	0,310	0,500	1,815	1,27	0,800	0,3165	14.400	-65	200	39	4211.C16
	1,8	0,375	0,330	0,310	0,500	1,815	1,27	0,800	0,3165	14.400	-65	200	41	4211.C18
	2,0	0,375	0,330	0,310	0,500	1,815	1,27	0,800	0,3165	14.400	-65	200	44	4211.C20
	2,3	0,375	0,330	0,310	0,500	1,815	1,27	0,800	0,3165	14.400	-65	200	47	4211.C23
	2,9	0,375	0,330	0,310	0,500	1,815	1,27	0,800	0,3165	14.400	-65	200	53	4211.C29
	3,0	0,375	0,330	0,310	0,500	1,815	1,27	0,800	0,3165	14.400	-65	200	53	4211.C30
	3,3	0,375	0,330	0,310	0,500	1,815	1,27	0,800	0,3165	14.400	-65	200	56	4211.C33
	4,0	0,375	0,330	0,310	0,500	1,815	1,27	0,800	0,3165	14.400	-65	200	62	4211.C40
	5,0	0,375	0,330	0,310	0,500	1,815	1,27	0,800	0,3165	14.400	-65	200	75	4211.C50
	6,4	0,375	0,330	0,310	0,500	1,815	1,27	0,800	0,3165	14.400	-65	200	89	4211.C64
	7,0	0,375	0,330	0,310	0,500	1,815	1,27	0,800	0,3165	14.400	-65	200	93	4211.C70
3/8	0,5	0,440	0,365	0,390	0,625	2,065	1,45	0,850	0,3790	20.700	-65	200	43	4211.D05
	1,0	0,440	0,365	0,390	0,625	2,065	1,45	0,850	0,3790	20.700	-65	200	48	4211.D10
	1,2	0,440	0,365	0,390	0,625	2,065	1,45	0,850	0,3790	20.700	-65	200	55	4211.D12
	1,5	0,440	0,365	0,390	0,625	2,065	1,45	0,850	0,3790	20.700	-65	200	57	4211.D15
	1,6	0,440	0,365	0,390	0,625	2,065	1,45	0,850	0,3790	20.700	-65	200	58	4211.D16
	2,0	0,440	0,365	0,390	0,625	2,065	1,45	0,850	0,3790	20.700	-65	200	64	4211.D20
	2,4	0,440	0,365	0,390	0,625	2,065	1,45	0,850	0,3790	20.700	-65	200	69	4211.D24
	2,5	0,440	0,365	0,390	0,625	2,065	1,45	0,850	0,3790	20.700	-65	200	71	4211.D25
	2,6	0,440	0,365	0,390	0,625	2,065	1,45	0,850	0,3790	20.700	-65	200	72	4211.D26
	2,8	0,440	0,365	0,390	0,625	2,065	1,45	0,850	0,3790	20.700	-65	200	72	4211.D28
	3,1	0,440	0,365	0,390	0,625	2,065	1,45	0,850	0,3790	20.700	-65	200	79	4211.D31
	3,2	0,440	0,365	0,390	0,625	2,065	1,45	0,850	0,3790	20.700	-65	200	80	4211.D32
	3,5	0,440	0,365	0,390	0,625	2,065	1,45	0,850	0,3790	20.700	-65	200	84	4211.D35
	4,0	0,440	0,365	0,390	0,625	2,065	1,45	0,850	0,3790	20.700	-65	200	95	4211.D40
	4,5	0,440	0,365	0,390	0,625	2,065	1,45	0,850	0,3790	20.700	-65	200	100	4211.D45
7/16	3,6	0,509	0,380	0,390	0,625	2,065	1,47	0,850	0,4425	28.500	-65	200	106	4211.E36
	1,2	0,509	0,380	0,390	0,625	2,065	1,47	0,850	0,4425	28.500	-65	200	60	4211.E12
	1,8	0,509	0,380	0,390	0,625	2,065	1,47	0,850	0,4425	28.500	-65	200	73	4211.E18
	2,3	0,509	0,380	0,390	0,625	2,065	1,47	0,850	0,4425	28.500	-65	200	82	4211.E23
	2,4	0,509	0,380	0,390	0,625	2,065	1,47	0,850	0,4425	28.500	-65	200	80	4211.E24
	2,6	0,509	0,380	0,390	0,625	2,065	1,47	0,850	0,4425	28.500	-65	200	90	4211.E26
	2,9	0,509	0,380	0,390	0,625	2,065	1,47	0,850	0,4425	28.500	-65	200	93	4211.E29
	4,0	0,509	0,380	0,390	0,625	2,065	1,47	0,850	0,4425	28.500	-65	200	113	4211.E40
	4,2	0,509	0,380	0,390	0,625	2,065	1,47	0,850	0,4425	28.500	-65	200	117	4211.E42
	5,5	0,509	0,380	0,390	0,625	2,065	1,47	0,850	0,4425	28.500	-65	200	145	4211.E55
	5,6	0,509	0,380	0,390	0,625	2,065	1,47	0,850	0,4425	28.500	-65	200	145	4211.E56

[1] shearing resistance similar to DIN 50141

Nominal diameter A	Clamping length L +0,02 0	Dimensions B ±0,005	C 0 -0,04	D max.	E max.	F max.	G max.	H min.	Location hole max.	Shearing resistance, double[1] min.	min.	max.		Art. No.
[inch]	[inch]	[inch]							[inch]	[lb]	[°F]		[g]	
1/2	**7,2**	0,594	0,460	0,390	0,625	2,345	1,60	0,850	0,5050	36.900	-65	200	176	**4211.E72**
	1,0	0,594	0,460	0,565	0,800	2,345	1,60	0,885	0,5050	36.900	-65	200	82	**4211.F10**
	1,2	0,594	0,460	0,565	0,800	2,345	1,60	0,885	0,5050	36.900	-65	200	87	**4211.F12**
	1,4	0,594	0,460	0,565	0,800	2,345	1,60	0,885	0,5050	36.900	-65	200	93	**4211.F14**
	1,5	0,594	0,460	0,565	0,800	2,345	1,60	0,885	0,5050	36.900	-65	200	94	**4211.F15**
	1,7	0,594	0,460	0,565	0,800	2,345	1,60	0,885	0,5050	36.900	-65	200	101	**4211.F17**
	1,9	0,594	0,460	0,565	0,800	2,345	1,60	0,885	0,5050	36.900	-65	200	106	**4211.F19**
	2,0	0,594	0,460	0,565	0,800	2,345	1,60	0,885	0,5050	36.900	-65	200	108	**4211.F20**
	2,4	0,594	0,460	0,565	0,800	2,345	1,60	0,885	0,5050	36.900	-65	200	118	**4211.F24**
	2,5	0,594	0,460	0,565	0,800	2,345	1,60	0,885	0,5050	36.900	-65	200	117	**4211.F25**
	2,9	0,594	0,460	0,565	0,800	2,345	1,60	0,885	0,5050	36.900	-65	200	130	**4211.F29**
	3,1	0,594	0,460	0,565	0,800	2,345	1,60	0,885	0,5050	36.900	-65	200	135	**4211.F31**
	3,6	0,594	0,460	0,565	0,800	2,345	1,60	0,885	0,5050	36.900	-65	200	147	**4211.F36**
	3,7	0,594	0,460	0,565	0,800	2,345	1,60	0,885	0,5050	36.900	-65	200	146	**4211.F37**
	4,0	0,594	0,460	0,565	0,800	2,345	1,60	0,885	0,5050	36.900	-65	200	156	**4211.F40**
	4,7	0,594	0,460	0,565	0,800	2,345	1,60	0,885	0,5050	36.900	-65	200	177	**4211.F47**
	4,8	0,594	0,460	0,565	0,800	2,345	1,60	0,885	0,5050	36.900	-65	200	180	**4211.F48**
	5,0	0,594	0,460	0,565	0,800	2,345	1,60	0,885	0,5050	36.900	-65	200	185	**4211.F50**
	6,4	0,594	0,460	0,565	0,800	2,345	1,60	0,885	0,5050	36.900	-65	200	217	**4211.F64**
9/16	**1,7**	0,666	0,510	0,565	0,800	2,345	1,60	0,885	0,5675	46.700	-65	200	120	**4211.G17**
	3,2	0,666	0,510	0,565	0,800	2,345	1,60	0,885	0,5675	46.700	-65	200	160	**4211.G32**
	3,6	0,666	0,510	0,565	0,800	2,345	1,60	0,885	0,5675	46.700	-65	200	176	**4211.G36**
	4,0	0,666	0,510	0,565	0,800	2,345	1,60	0,885	0,5675	46.700	-65	200	190	**4211.G40**
	6,1	0,666	0,510	0,565	0,800	2,345	1,60	0,885	0,5675	46.700	-65	200	252	**4211.G61**

[1] shearing resistance similar to DIN 50141

2

Ball Lock Pins • single acting - complies with NASM / MS17986

EH 4212.

PRODUCT DESCRIPTION

Ball lock pins according to NASM (former norm: MS) are used for quick fastening, locking, adjusting, changing and securing. Quickly and easily unlockable for frequently repeated connections.
Ball lock pins (quick release pins) are produced according to Aviation Norm NASM (former norm: MS) and tested to NAS 1332.

Material

Pin ①
- Stainless steel, precipitation-hardened, passivated

Press bolt ②
- Stainless steel, precipitation-hardened, passivated

Spring ③
- Stainless steel, passivated

Handle ④
- Aluminium, black anodised

Attaching ring ⑤
- Stainless steel, passivated

Ball ⑥
- Stainless steel, precipitation-hardened, passivated

Operation

The balls are unlocked by pressing the knob.

MORE INFORMATION

Notes

Special types on request.
All further dimensions are available on request.
- This product is manufactured in INCH dimensions.

References

A conversion table can be found in the technical data following these product information pages.

DRAWING

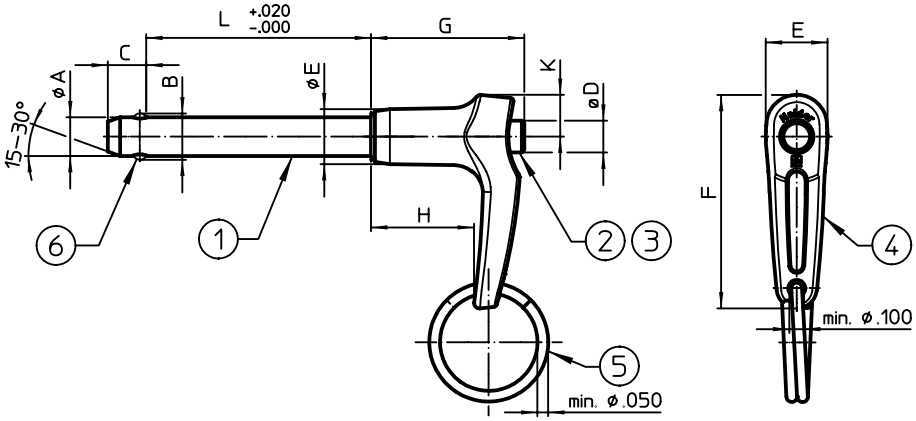

ORDER INFORMATION

Nominal diameter A	Clamping length L +0,020 0	Dimensions B ±0,005	C +0,1 -0,04	D max.	E max.	F max.	G max.	H min.	K max.	Location hole max.	Shearing resistance, double[1] min.	min.	max.		Art. No.
[inch]	[inch]	[inch]								[inch]	[lb]	[°F]		[g]	
3/16	**0,5**	0,220	0,260	0,310	0,500	1,80	1,27	0,76	0,34	0,1940	5.150	-65	200	25	**4212.A05**
	0,8	0,220	0,260	0,310	0,500	1,80	1,27	0,76	0,34	0,1940	5.150	-65	200	26	**4212.A08**
	1,0	0,220	0,260	0,310	0,500	1,80	1,27	0,76	0,34	0,1940	5.150	-65	200	27	**4212.A10**
	1,3	0,220	0,260	0,310	0,500	1,80	1,27	0,76	0,34	0,1940	5.150	-65	200	28	**4212.A13**
	1,4	0,220	0,260	0,310	0,500	1,80	1,27	0,76	0,34	0,1940	5.150	-65	200	31	**4212.A14**
	1,7	0,220	0,260	0,310	0,500	1,80	1,27	0,76	0,34	0,1940	5.150	-65	200	27	**4212.A17**
1/4	**0,5**	0,289	0,290	0,310	0,500	1,80	1,27	0,76	0,34	0,2540	9.200	-65	200	27	**4212.B05**
	1,2	0,289	0,290	0,310	0,500	1,80	1,27	0,76	0,34	0,2540	9.200	-65	200	31	**4212.B12**
	1,5	0,289	0,290	0,310	0,500	1,80	1,27	0,76	0,34	0,2540	9.200	-65	200	33	**4212.B15**
	1,6	0,289	0,290	0,310	0,500	1,80	1,27	0,76	0,34	0,2540	9.200	-65	200	33	**4212.B16**
	1,7	0,289	0,290	0,310	0,500	1,80	1,27	0,76	0,34	0,2540	9.200	-65	200	34	**4212.B17**
	2,0	0,289	0,290	0,310	0,500	1,80	1,27	0,76	0,34	0,2540	9.200	-65	200	35	**4212.B20**
	2,1	0,289	0,290	0,310	0,500	1,80	1,27	0,76	0,34	0,2540	9.200	-65	200	36	**4212.B21**

[1] shearing resistance similar to DIN 50141

Nominal diameter A	Clamp-ing length L +0,02 0	Dimensions B ±0,005	C +0,1 -0,04	D max.	E max.	F max.	G max.	H min.	K max.	Location hole max.	Shearing resist-ance, double[1] min.	min.	max.		Art. No.
[inch]	[inch]	[inch]								[inch]	[lb]	[°F]		[g]	
5/16	**0,4**	0,375	0,330	0,310	0,500	1,80	1,27	0,76	0,34	0,3165	14.400	-65	200	29	4212.C04
	0,6	0,375	0,330	0,310	0,500	1,80	1,27	0,76	0,34	0,3165	14.400	-65	200	31	4212.C06
	1,0	0,375	0,330	0,310	0,500	1,80	1,27	0,76	0,34	0,3165	14.400	-65	200	34	4212.C10
	1,3	0,375	0,330	0,310	0,500	1,80	1,27	0,76	0,34	0,3165	14.400	-65	200	37	4212.C13
	1,6	0,375	0,330	0,310	0,500	1,80	1,27	0,76	0,34	0,3165	14.400	-65	200	39	4212.C16
	1,8	0,375	0,330	0,310	0,500	1,80	1,27	0,76	0,34	0,3165	14.400	-65	200	43	4212.C18
	2,0	0,375	0,330	0,310	0,500	1,80	1,27	0,76	0,34	0,3165	14.400	-65	200	41	4212.C20
	2,3	0,375	0,330	0,310	0,500	1,80	1,27	0,76	0,34	0,3165	14.400	-65	200	46	4212.C23
	2,9	0,375	0,330	0,310	0,500	1,80	1,27	0,76	0,34	0,3165	14.400	-65	200	54	4212.C29
	3,0	0,375	0,330	0,310	0,500	1,80	1,27	0,76	0,34	0,3165	14.400	-65	200	53	4212.C30
	3,3	0,375	0,330	0,310	0,500	1,80	1,27	0,76	0,34	0,3165	14.400	-65	200	57	4212.C33
	3,6	0,375	0,330	0,310	0,500	1,80	1,27	0,76	0,34	0,3165	14.400	-65	200	60	4212.C36
	4,0	0,375	0,330	0,310	0,500	1,80	1,27	0,76	0,34	0,3165	14.400	-65	200	64	4212.C40
3/8	**1,0**	0,440	0,365	0,390	0,625	2,03	1,45	0,85	0,39	0,3790	20.700	-65	200	49	4212.D10
	1,5	0,440	0,365	0,390	0,625	2,03	1,45	0,85	0,39	0,3790	20.700	-65	200	59	4212.D15
	1,8	0,440	0,365	0,390	0,625	2,03	1,45	0,85	0,39	0,3790	20.700	-65	200	61	4212.D18
	2,0	0,440	0,365	0,390	0,625	2,03	1,45	0,85	0,39	0,3790	20.700	-65	200	65	4212.D20
	2,4	0,440	0,365	0,390	0,625	2,03	1,45	0,85	0,39	0,3790	20.700	-65	200	71	4212.D24
	2,6	0,440	0,365	0,390	0,625	2,03	1,45	0,85	0,39	0,3790	20.700	-65	200	73	4212.D26
	3,0	0,440	0,365	0,390	0,625	2,03	1,45	0,85	0,39	0,3790	20.700	-65	200	78	4212.D30
	6,0	0,440	0,365	0,390	0,625	2,03	1,45	0,85	0,39	0,3790	20.700	-65	200	122	4212.D60
7/16	**1,2**	0,509	0,380	0,390	0,625	2,03	1,47	0,85	0,39	0,4425	28.500	-65	200	61	4212.E12
	3,5	0,509	0,380	0,390	0,625	2,03	1,47	0,85	0,39	0,4425	28.500	-65	200	104	4212.E35
	4,0	0,509	0,380	0,390	0,625	2,03	1,47	0,85	0,39	0,4425	28.500	-65	200	113	4212.E40
	5,5	0,509	0,380	0,390	0,625	2,03	1,47	0,85	0,39	0,4425	28.500	-65	200	146	4212.E55
1/2	**1,0**	0,594	0,460	0,565	0,800	2,36	1,60	0,85	0,50	0,5050	36.900	-65	200	83	4212.F10
	1,5	0,594	0,460	0,565	0,800	2,36	1,60	0,85	0,50	0,5050	36.900	-65	200	96	4212.F15
	1,9	0,594	0,460	0,565	0,800	2,36	1,60	0,85	0,50	0,5050	36.900	-65	200	103	4212.F19
	3,4	0,594	0,460	0,565	0,800	2,36	1,60	0,85	0,50	0,5050	36.900	-65	200	143	4212.F34
	4,2	0,594	0,460	0,565	0,800	2,36	1,60	0,85	0,50	0,5050	36.900	-65	200	166	4212.F42
	4,5	0,594	0,460	0,565	0,800	2,36	1,60	0,85	0,50	0,5050	36.900	-65	200	172	4212.F45
9/16	**1,7**	0,666	0,510	0,565	0,800	2,36	1,60	0,85	0,50	0,5675	46.700	-65	200	116	4212.G17
	2,5	0,666	0,510	0,565	0,800	2,36	1,60	0,85	0,50	0,5675	46.700	-65	200	140	4212.G25
	4,0	0,666	0,510	0,565	0,800	2,36	1,60	0,85	0,50	0,5675	46.700	-65	200	189	4212.G40
	5,0	0,666	0,510	0,565	0,800	2,36	1,60	0,85	0,50	0,5675	46.700	-65	200	219	4212.G50
	6,0	0,666	0,510	0,565	0,800	2,36	1,60	0,85	0,50	0,5675	46.700	-65	200	249	4212.G60
	7,5	0,666	0,510	0,565	0,800	2,36	1,60	0,85	0,50	0,5675	46.700	-65	200	298	4212.G75

[1] shearing resistance similar to DIN 50141

2

Ball Lock Pins • single acting - complies with NASM / MS17987

EH 4213.

PRODUCT DESCRIPTION

Ball lock pins according to NASM (former norm: MS) are used for quick fastening, locking, adjusting, changing and securing. Quickly and easily unlockable for frequently repeated connections.
Ball lock pins (quick release pins) are produced according to Aviation Norm NASM (former norm: MS) and tested to NAS 1332.

Material

Pin ①
- Stainless steel, precipitation-hardened, passivated

Press bolt ②
- Stainless steel, precipitation-hardened, passivated

Spring ③
- Stainless steel, passivated

Handle ④
- Stainless steel, passivated

Attaching ring ⑤
- Stainless steel, passivated

Ball ⑥
- Stainless steel, precipitation-hardened, passivated

Operation

The balls are unlocked by pressing the knob.

MORE INFORMATION

Notes

Special types on request.
All further dimensions are available on request.
- This product is manufactured in INCH dimensions.

References

A conversion table can be found in the technical data following these product information pages.

DRAWING

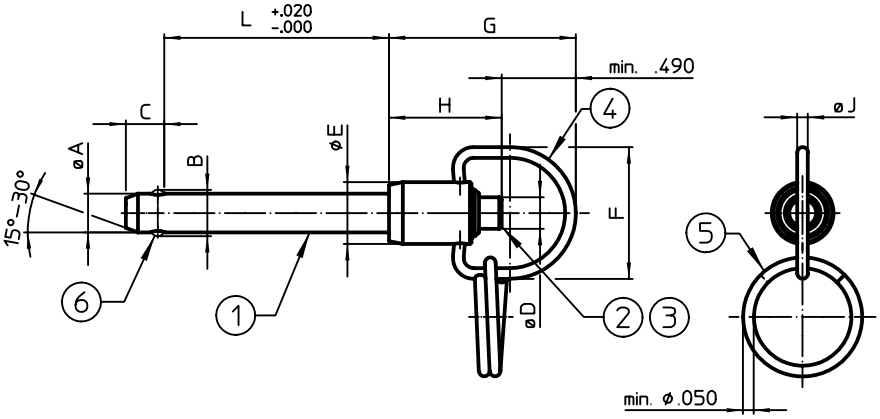

ORDER INFORMATION

Nominal diameter A	Clamping length L	Dimensions							Location hole	Shearing resistance, double[1]				Art. No.
		B	C	D	E	G	H	J						
	+0,02 0	±0,005	0 -0,04	max.	max.	max.	min.	min.	max.	min.	min.	max.		
[inch]	[inch]	[inch]							[inch]	[lb]	[°F]		[g]	
3/16	**0,8**	0,220	0,260	0,310	0,53	1,45	0,73	0,08	0,1940	5.150	-65	200	24	4213.A08
	0,9	0,220	0,260	0,310	0,53	1,45	0,73	0,08	0,1940	5.150	-65	200	24	4213.A09
	1,0	0,220	0,260	0,310	0,53	1,45	0,73	0,08	0,1940	5.150	-65	200	24	4213.A10
	1,1	0,220	0,260	0,310	0,53	1,45	0,73	0,08	0,1940	5.150	-65	200	25	4213.A11
	1,2	0,220	0,260	0,310	0,53	1,45	0,73	0,08	0,1940	5.150	-65	200	25	4213.A12
	1,5	0,220	0,260	0,310	0,53	1,45	0,73	0,08	0,1940	5.150	-65	200	26	4213.A15
	1,6	0,220	0,260	0,310	0,53	1,45	0,73	0,08	0,1940	5.150	-65	200	26	4213.A16
	1,7	0,220	0,260	0,310	0,53	1,45	0,73	0,08	0,1940	5.150	-65	200	27	4213.A17
	2,5	0,220	0,260	0,310	0,53	1,45	0,73	0,08	0,1940	5.150	-65	200	29	4213.A31
	3,1	0,220	0,260	0,310	0,53	1,45	0,73	0,08	0,1940	5.150	-65	200	33	4213.A31
	4,3	0,220	0,260	0,310	0,53	1,45	0,73	0,08	0,1940	5.150	-65	200	36	4213.A43

[1] shearing resistance similar to DIN 50141

Nominal diameter A	Clamping length L	Dimensions							Location hole	Shearing resistance, double[1]				Art. No.
	+0,02 0	B ±0,005	C 0 -0,04	D max.	E max.	G max.	H min.	J min.	max.	min.	min.	max.		
[inch]	[inch]	[inch]							[inch]	[lb]	[°F]		[g]	
1/4	**0,4**	0,289	0,290	0,310	0,53	1,50	0,78	0,08	0,2540	9.200	-65	200	24	4213.B04
	0,5	0,289	0,290	0,310	0,53	1,50	0,78	0,08	0,2540	9.200	-65	200	25	4213.B05
	0,6	0,289	0,290	0,310	0,53	1,50	0,78	0,08	0,2540	9.200	-65	200	25	4213.B06
	0,7	0,289	0,290	0,310	0,53	1,50	0,78	0,08	0,2540	9.200	-65	200	26	4213.B07
	0,8	0,289	0,290	0,310	0,53	1,50	0,78	0,08	0,2540	9.200	-65	200	26	4213.B08
	0,9	0,289	0,290	0,310	0,53	1,50	0,78	0,08	0,2540	9.200	-65	200	27	4213.B09
	1,0	0,289	0,290	0,310	0,53	1,50	0,78	0,08	0,2540	9.200	-65	200	27	4213.B10
	1,1	0,289	0,290	0,310	0,53	1,50	0,78	0,08	0,2540	9.200	-65	200	28	4213.B11
	1,2	0,289	0,290	0,310	0,53	1,50	0,78	0,08	0,2540	9.200	-65	200	29	4213.B12
	1,3	0,289	0,290	0,310	0,53	1,50	0,78	0,08	0,2540	9.200	-65	200	30	4213.B13
	1,4	0,289	0,290	0,310	0,53	1,50	0,78	0,08	0,2540	9.200	-65	200	30	4213.B14
	1,5	0,289	0,290	0,310	0,53	1,50	0,78	0,08	0,2540	9.200	-65	200	31	4213.B15
	1,7	0,289	0,290	0,310	0,53	1,50	0,78	0,08	0,2540	9.200	-65	200	32	4213.B17
	1,8	0,289	0,290	0,310	0,53	1,50	0,78	0,08	0,2540	9.200	-65	200	32	4213.B18
	1,9	0,289	0,290	0,310	0,53	1,50	0,78	0,08	0,2540	9.200	-65	200	33	4213.B19
	2,0	0,289	0,290	0,310	0,53	1,50	0,78	0,08	0,2540	9.200	-65	200	34	4213.B20
	2,1	0,289	0,290	0,310	0,53	1,50	0,78	0,08	0,2540	9.200	-65	200	34	4213.B21
	2,2	0,289	0,290	0,310	0,53	1,50	0,78	0,08	0,2540	9.200	-65	200	35	4213.B22
	2,4	0,289	0,290	0,310	0,53	1,50	0,78	0,08	0,2540	9.200	-65	200	36	4213.B24
	2,5	0,289	0,290	0,310	0,53	1,50	0,78	0,08	0,2540	9.200	-65	200	36	4213.B25
	2,9	0,289	0,290	0,310	0,53	1,50	0,78	0,08	0,2540	9.200	-65	200	40	4213.B29
	3,0	0,289	0,290	0,310	0,53	1,50	0,78	0,08	0,2540	9.200	-65	200	39	4213.B30
	4,0	0,289	0,290	0,310	0,53	1,50	0,78	0,08	0,2540	9.200	-65	200	47	4213.B40
	4,7	0,289	0,290	0,310	0,53	1,50	0,78	0,08	0,2540	9.200	-65	200	50	4213.B47
5/16	**0,6**	0,375	0,330	0,310	0,59	1,65	0,83	0,08	0,3165	14.400	-65	200	30	4213.C06
	0,7	0,375	0,330	0,310	0,59	1,65	0,83	0,08	0,3165	14.400	-65	200	31	4213.C07
	0,8	0,375	0,330	0,310	0,59	1,65	0,83	0,08	0,3165	14.400	-65	200	33	4213.C08
	0,9	0,375	0,330	0,310	0,59	1,65	0,83	0,08	0,3165	14.400	-65	200	34	4213.C09
	1,1	0,375	0,330	0,310	0,59	1,65	0,83	0,08	0,3165	14.400	-65	200	35	4213.C11
	1,2	0,375	0,330	0,310	0,59	1,65	0,83	0,08	0,3165	14.400	-65	200	36	4213.C12
	1,3	0,375	0,330	0,310	0,59	1,65	0,83	0,08	0,3165	14.400	-65	200	37	4213.C13
	1,5	0,375	0,330	0,310	0,59	1,65	0,83	0,08	0,3165	14.400	-65	200	39	4213.C15
	1,6	0,375	0,330	0,310	0,59	1,65	0,83	0,08	0,3165	14.400	-65	200	40	4213.C16
	1,8	0,375	0,330	0,310	0,59	1,65	0,83	0,08	0,3165	14.400	-65	200	41	4213.C18
	1,9	0,375	0,330	0,310	0,59	1,65	0,83	0,08	0,3165	14.400	-65	200	42	4213.C19
	2,0	0,375	0,330	0,310	0,59	1,65	0,83	0,08	0,3165	14.400	-65	200	43	4213.C20
	2,3	0,375	0,330	0,310	0,59	1,65	0,83	0,08	0,3165	14.400	-65	200	46	4213.C23
	2,6	0,375	0,330	0,310	0,59	1,65	0,83	0,08	0,3165	14.400	-65	200	48	4213.C26
	3,3	0,375	0,330	0,310	0,59	1,65	0,83	0,08	0,3165	14.400	-65	200	56	4213.C33
	3,5	0,375	0,330	0,310	0,59	1,65	0,83	0,08	0,3165	14.400	-65	200	59	4213.C35
	6,0	0,375	0,330	0,310	0,59	1,65	0,83	0,08	0,3165	14.400	-65	200	85	4213.C60
	6,7	0,375	0,330	0,310	0,59	1,65	0,83	0,08	0,3165	14.400	-65	200	92	4213.C67
3/8	**0,8**	0,440	0,365	0,390	0,65	1,65	0,94	0,08	0,3790	20.700	-65	200	49	4213.D08
	0,9	0,440	0,365	0,390	0,65	1,65	0,94	0,08	0,3790	20.700	-65	200	50	4213.D09
	1,0	0,440	0,365	0,390	0,65	1,65	0,94	0,08	0,3790	20.700	-65	200	51	4213.D10
	1,1	0,440	0,365	0,390	0,65	1,65	0,94	0,08	0,3790	20.700	-65	200	53	4213.D11
	1,2	0,440	0,365	0,390	0,65	1,65	0,94	0,08	0,3790	20.700	-65	200	54	4213.D12
	1,3	0,440	0,365	0,390	0,65	1,65	0,94	0,08	0,3790	20.700	-65	200	55	4213.D13
	1,4	0,440	0,365	0,390	0,65	1,65	0,94	0,08	0,3790	20.700	-65	200	55	4213.D14
	1,5	0,440	0,365	0,390	0,65	1,65	0,94	0,08	0,3790	20.700	-65	200	58	4213.D15
	1,6	0,440	0,365	0,390	0,65	1,65	0,94	0,08	0,3790	20.700	-65	200	59	4213.D16
	1,8	0,440	0,365	0,390	0,65	1,65	0,94	0,08	0,3790	20.700	-65	200	62	4213.D18
	2,6	0,440	0,365	0,390	0,65	1,65	0,94	0,08	0,3790	20.700	-65	200	73	4213.D26
	3,0	0,440	0,365	0,390	0,65	1,65	0,94	0,08	0,3790	20.700	-65	200	80	4213.D30
	3,1	0,440	0,365	0,390	0,65	1,65	0,94	0,08	0,3790	20.700	-65	200	82	4213.D31
	4,3	0,440	0,365	0,390	0,65	1,65	0,94	0,08	0,3790	20.700	-65	200	97	4213.D43

[1] shearing resistance similar to DIN 50141

Nominal diameter A [inch]	Clamping length L +0,02 0 [inch]	Dimensions B ±0,005 [inch]	C 0 -0,04 [inch]	D max. [inch]	E max. [inch]	G max. [inch]	H min. [inch]	J min. [inch]	Location hole max. [inch]	Shearing resistance, double[1] min. [lb]	min. [°F]	max. [°F]	[g]	Art. No.
7/16	**0,8**	0,509	0,380	0,390	0,71	1,85	0,98	0,08	0,4425	28.500	-65	200	56	4213.E08
	1,2	0,509	0,380	0,390	0,71	1,85	0,98	0,08	0,4425	28.500	-65	200	65	4213.E12
	1,4	0,509	0,380	0,390	0,71	1,85	0,98	0,08	0,4425	28.500	-65	200	68	4213.E14
	1,5	0,509	0,380	0,390	0,71	1,85	0,98	0,08	0,4425	28.500	-65	200	70	4213.E15
	1,9	0,509	0,380	0,390	0,71	1,85	0,98	0,08	0,4425	28.500	-65	200	78	4213.E19
	2,0	0,509	0,380	0,390	0,71	1,85	0,98	0,08	0,4425	28.500	-65	200	81	4213.E20
	2,2	0,509	0,380	0,390	0,71	1,85	0,98	0,08	0,4425	28.500	-65	200	81	4213.E22
	2,4	0,509	0,380	0,390	0,71	1,85	0,98	0,08	0,4425	28.500	-65	200	88	4213.E24
	2,6	0,509	0,380	0,390	0,71	1,85	0,98	0,08	0,4425	28.500	-65	200	92	4213.E26
1/2	**1,1**	0,594	0,460	0,565	0,80	1,85	1,14	0,08	0,5050	36.900	-65	200	88	4213.F11
	1,2	0,594	0,460	0,565	0,80	1,85	1,14	0,08	0,5050	36.900	-65	200	91	4213.F12
	1,3	0,594	0,460	0,565	0,80	1,85	1,14	0,08	0,5050	36.900	-65	200	93	4213.F13
	1,4	0,594	0,460	0,565	0,80	1,85	1,14	0,08	0,5050	36.900	-65	200	96	4213.F14
	1,5	0,594	0,460	0,565	0,80	1,85	1,14	0,08	0,5050	36.900	-65	200	98	4213.F15
	2,0	0,594	0,460	0,565	0,80	1,85	1,14	0,08	0,5050	36.900	-65	200	109	4213.F20
	2,3	0,594	0,460	0,565	0,80	1,85	1,14	0,08	0,5050	36.900	-65	200	117	4213.F23
	3,3	0,594	0,460	0,565	0,80	1,85	1,14	0,08	0,5050	36.900	-65	200	141	4213.F33
	3,5	0,594	0,460	0,565	0,80	1,85	1,14	0,08	0,5050	36.900	-65	200	146	4213.F35
	3,9	0,594	0,460	0,565	0,80	1,85	1,14	0,08	0,5050	36.900	-65	200	160	4213.F39
	4,5	0,594	0,460	0,565	0,80	1,85	1,14	0,08	0,5050	36.900	-65	200	160	4213.F45
	5,0	0,594	0,460	0,565	0,80	1,85	1,14	0,08	0,5050	36.900	-65	200	187	4213.F50
	5,3	0,594	0,460	0,565	0,80	1,85	1,14	0,08	0,5050	36.900	-65	200	193	4213.F53
	6,5	0,594	0,460	0,565	0,80	1,85	1,14	0,08	0,5050	36.900	-65	200	215	4213.F65
	8,0	0,594	0,460	0,565	0,80	1,85	1,14	0,08	0,5050	36.900	-65	200	263	4213.F80
9/16	**1,3**	0,666	0,510	0,565	0,84	2,03	1,14	0,08	0,5675	46.700	-65	200	120	4213.G13
	2,5	0,666	0,510	0,565	0,84	2,03	1,14	0,08	0,5675	46.700	-65	200	150	4213.G25
	3,0	0,666	0,510	0,565	0,84	2,03	1,14	0,08	0,5675	46.700	-65	200	166	4213.G30
	3,7	0,666	0,510	0,565	0,84	2,03	1,14	0,08	0,5675	46.700	-65	200	187	4213.G37
	5,5	0,666	0,510	0,565	0,84	2,03	1,14	0,08	0,5675	46.700	-65	200	245	4213.G55

[1] shearing resistance similar to DIN 50141

Grub Screws • DIN 6332 with thrust point

EH 22540.

PRODUCT DESCRIPTION

For combination with thrust pads with snap ring DIN 6311 form S (EH 22560.) and clamping screws DIN 6332.

Material

- Steel, blackened, quality 5.8, thrust point hardened
- Stainless steel

MORE INFORMATION

Further products

Thrust Pads, DIN 6311 and low model → p. 257

DRAWING

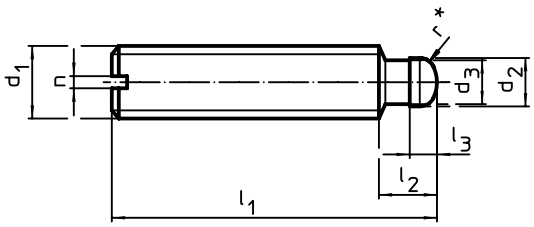

picture 1

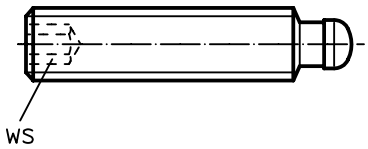

picture 2

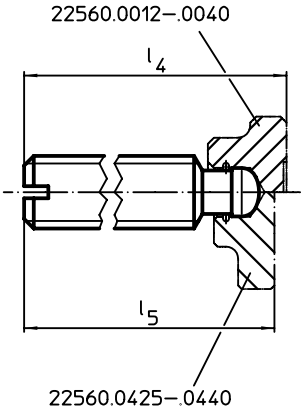

* to ease assembly the DIN 6332 specification has been completed by r

ORDER INFORMATION

d_1	l_1	d_2 h11	d_3	z_2	z_3	l_2 ~	l_3 ~	n	WS		Art. No. steel	Art. No. stainless steel
Dimensions [mm]									[mm]	[g]		
slotted (S) – picture 1												
M 6	30	4,5	4,0	6,0	2,5	32,1	–	1,0	–	4,5	22540.0061	22540.1061
	50	4,5	4,0	6,0	2,5	52,1	–	1,0	–	7,8	22540.0062	22540.1062
M 8	40	6,0	5,4	7,5	3,0	43,0	42,5	1,2	–	11,0	22540.0081	22540.1081
	60	6,0	5,4	7,5	3,0	63,0	62,5	1,2	–	17,0	22540.0082	22540.1082
M10	60	8,0	7,2	9,0	4,5	63,6	62,6	1,6	–	27,0	22540.0101	22540.1101
	80	8,0	7,2	9,0	4,5	83,6	82,6	1,6	–	37,0	22540.0102	22540.1102
M12	60	8,0	7,2	10,0	4,5	64,6	62,6	2,0	–	38,0	22540.0121	22540.1121
	80	8,0	7,2	10,0	4,5	84,6	82,6	2,0	–	51,0	22540.0122	22540.1122
	100	8,0	7,2	10,0	4,5	104,6	102,6	2,0	–	65,0	22540.0123	22540.1123
M16	80	12,0	11,0	12,0	5,0	85,4	82,9	2,5	–	100,0	22540.0161	22540.1161
	100	12,0	11,0	12,0	5,0	105,4	102,9	2,5	–	126,0	22540.0162	22540.1162
	125	12,0	11,0	12,0	5,0	130,4	127,9	2,5	–	160,0	22540.0163	22540.1163
M20	100	15,5	14,4	14,0	5,5	105,5	–	3,0	–	190,0	22540.0201	22540.1201
	125	15,5	14,4	14,0	5,5	130,5	–	3,0	–	240,0	22540.0202	22540.1202
	150	15,5	14,4	14,0	5,5	155,5	–	3,0	–	290,0	22540.0203	22540.1203
with internal hexagon (IS) – picture 2												
M 6	30	4,5	4,0	6,0	2,5	32,1	–	–	3	4,3	22540.0361	22540.1361
	50	4,5	4,0	6,0	2,5	52,1	–	–	3	7,6	22540.0362	22540.1362
M 8	40	6,0	5,4	7,5	3,0	43,0	42,5	–	4	11,0	22540.0381	22540.1381
	60	6,0	5,4	7,5	3,0	63,0	62,5	–	4	17,0	22540.0382	22540.1382
M10	60	8,0	7,2	9,0	4,5	63,6	62,6	–	5	26,0	22540.0401	22540.1401
	80	8,0	7,2	9,0	4,5	83,6	82,6	–	5	36,0	22540.0402	22540.1402
M12	60	8,0	7,2	10,0	4,5	64,6	62,6	–	6	36,0	22540.0421	22540.1421
	80	8,0	7,2	10,0	4,5	84,6	82,6	–	6	50,0	22540.0422	22540.1422
	100	8,0	7,2	10,0	4,5	104,6	102,6	–	6	64,0	22540.0423	22540.1423
M16	80	12,0	11,0	12,0	5,0	85,4	82,9	–	8	91,0	22540.0461	22540.1461
	100	12,0	11,0	12,0	5,0	105,4	102,9	–	8	118,0	22540.0462	22540.1462
	125	12,0	11,0	12,0	5,0	130,4	127,9	–	8	150,0	22540.0463	22540.1463
M20	100	15,5	14,4	14,0	5,5	105,5	–	–	10	182,0	22540.0501	22540.1501
	125	15,5	14,4	14,0	5,5	130,5	–	–	10	233,0	22540.0502	22540.1502
	150	15,5	14,4	14,0	5,5	155,5	–	–	10	284,0	22540.0503	22540.1503

2

APPLICATION EXAMPLE

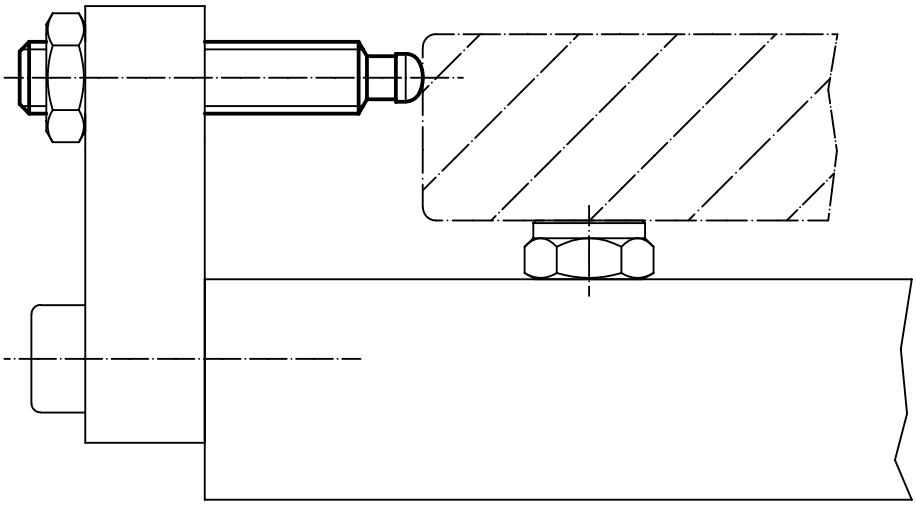

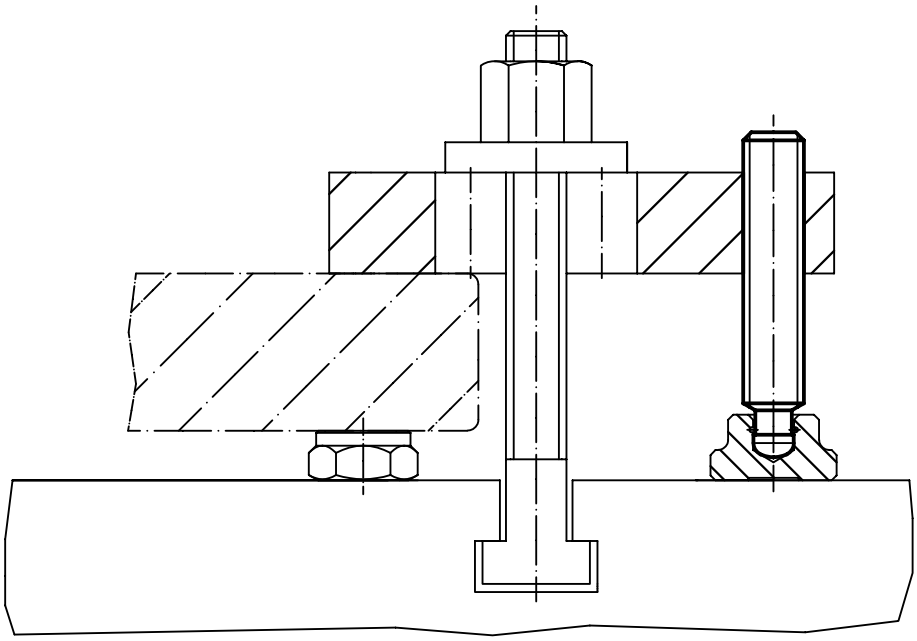

Thrust Pads • DIN 6311 and low model

EH 22560.

PRODUCT DESCRIPTION

Combinable with grub screws DIN 6332 with thrust point EH 22540.

Material

- Steel, case-hardened, blackened. Snap ring inlayed.
- Stainless steel

Assembly

The thrust pad is to be held the way the spring retainer lies in the recess with its open side at the bottom. The grub screw is inclined as far as possible in the direction of the open side of the ring and pressed in.

MORE INFORMATION

Further products

Grub Screws, DIN 6332 with thrust point. . . . . → p. 255

DRAWING

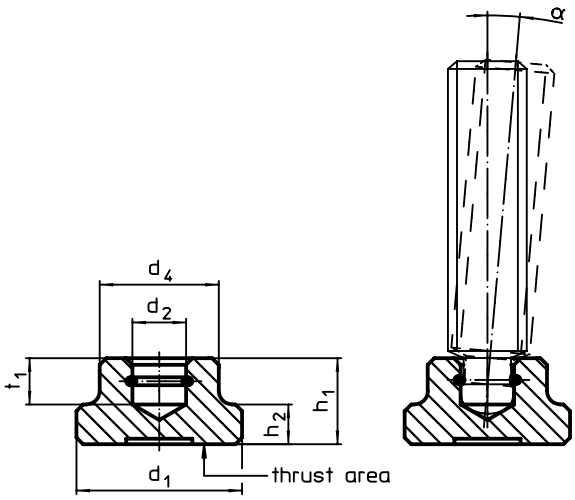

picture 1

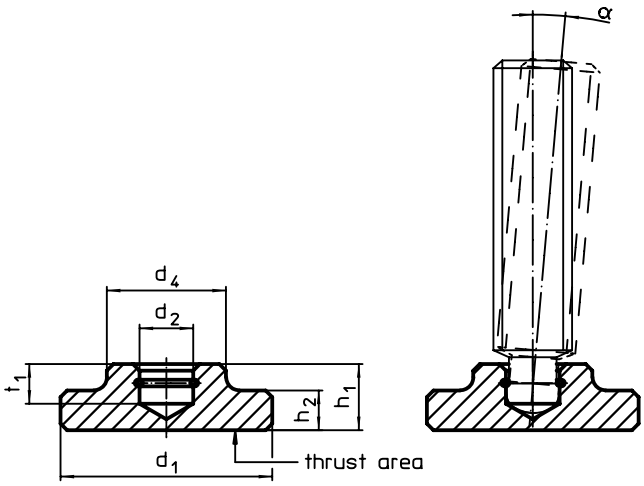

picture 2

ORDER INFORMATION

Dimensions d_1	d_2 H12	d_4	h_1	h_2	t_1	For grub screws with thrust point DIN 6332	α min.		Art. No. steel	Art. No. stainless steel
[mm]						[mm]		[g]		
DIN 6311 with snap ring, form S – picture 1										
12	4,6	10	7	2,5	4,0	M 6	7°	4,3	22560.0012	22560.0112
16	6,1	12	9	4,0	5,0	M 8	4°	9,4	22560.0016	22560.0116
20	8,1	15	11	5,0	6,0	M10	3°	18,0	22560.0020	22560.0120
25	8,1	18	13	6,0	7,0	M12	3°	30,0	22560.0025	22560.0125
32	12,1	22	15	7,0	7,5	M16	5°	59,0	22560.0032	22560.0132
40	15,6	28	16	9,0	8,0	M20	4°	105,0	22560.0040	22560.0140
low model, with increased thrust area and spring retainer – picture 2										
25	6,1	12	8	4,0	4,5	M 8	4°	18,0	22560.0425	22560.1425
32	8,1	18	10	6,0	6,0	M10/M12	3°	43,0	22560.0432	22560.1432
40	12,1	22	12	7,0	7,0	M16	5°	75,0	22560.0440	22560.1440

APPLICATION EXAMPLE

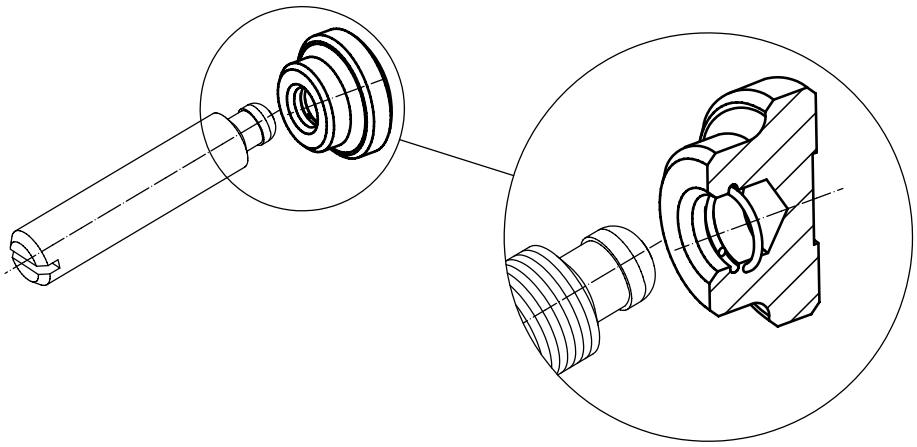

2

Thrust Pads • plastic

EH 22570.

PRODUCT DESCRIPTION

For combination with ball-headed grub screws EH 22570.

Material

- Thermoplastic POM, black, dull

MORE INFORMATION

Further products

Grub Screws, ball-headed . . . . . → p. 259

DRAWING

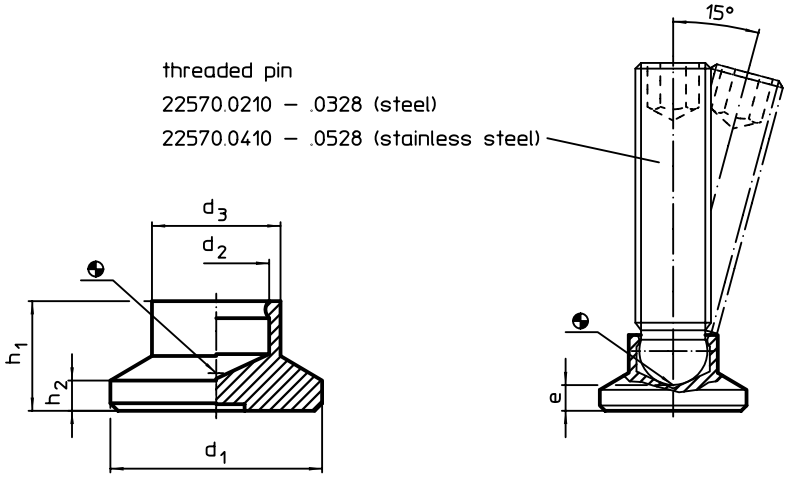

ORDER INFORMATION

Dimensions						Load capacity for static load max.	For grub screws EH 22570.				Art. No.
d_1	d_2	d_3	e ~	h_1	h_2			min.	max.		
[mm]						[kN]	[mm]	[°C]		[g]	
15	**4,5**	8,6	3,6	7,6	2,5	3,5	M 6	-30	80	1,1	22570.0014
	6,1	8,6	2,5	7,6	2,5	3,5	M 8	-30	80	1,0	22570.0015
18	**6,1**	10,8	4,2	9,2	2,5	3,5	M 8	-30	80	1,7	22570.0017
	7,8	10,8	3,4	9,2	2,5	3,5	M10	-30	80	2,0	22570.0018
21	**6,1**	12,8	5,0	10,0	3,0	3,5	M 8	-30	80	3,0	22570.0019
	7,8	12,8	4,3	10,0	3,0	3,5	M10	-30	80	2,6	22570.0020
	9,4	12,8	3,4	10,0	3,0	3,5	M12	-30	80	2,4	22570.0021
25	**6,1**	13,0	5,5	10,5	3,0	3,5	M 8	-30	80	4,0	22570.0023
	7,8	13,0	4,6	10,5	3,0	3,5	M10	-30	80	3,6	22570.0024
	9,4	13,0	3,6	10,5	3,0	3,5	M12	-30	80	3,4	22570.0025
32	**6,1**	14,0	6,0	11,0	3,0	3,5	M 8	-30	80	5,0	22570.0032
	7,8	14,0	5,0	11,0	3,0	3,5	M10	-30	80	5,0	22570.0033
	9,4	14,0	4,2	11,0	3,0	3,5	M12	-30	80	5,0	22570.0034
40	**6,1**	16,0	8,0	13,0	4,0	3,5	M 8	-30	80	11,0	22570.0040
	7,8	16,0	7,0	13,0	4,0	3,5	M10	-30	80	10,0	22570.0041
	9,4	16,0	6,2	13,0	4,0	3,5	M12	-30	80	10,0	22570.0042

APPLICATION EXAMPLE

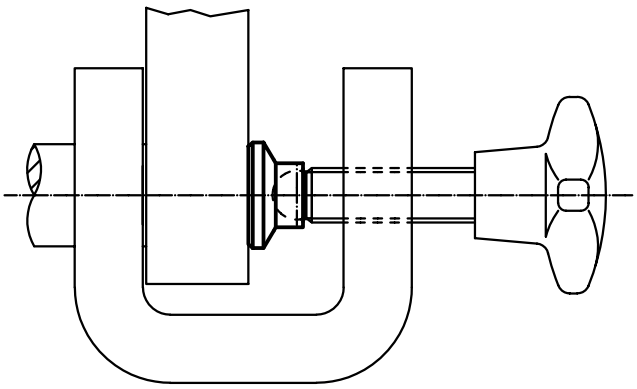

Grub Screws • ball-headed

EH 22570.

PRODUCT DESCRIPTION

For combination with plastic thrust pads EH 22570.

Material

- Free cutting steel, quality 5.8, blackened
- Stainless steel 1.4305

MORE INFORMATION

Further products

Thrust Pads, plastic . . . . . → p. 258

DRAWING

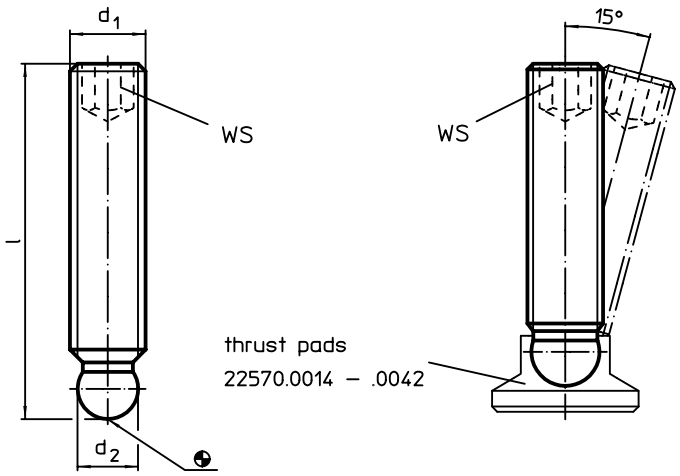

ORDER INFORMATION

Dimensions			WS		Art. No.	
d_1	l	d_2 +0,05			free cutting steel	stainless steel
	[mm]		[mm]	[g]		
M 6	30	4,47	3	5,1	22570.0210	22570.0410
	40	4,47	3	5,9	22570.0214	22570.0414
	50	4,47	3	7,6	22570.0218	22570.0418
M 8	25	6,10	4	5,8	22570.0219	22570.0419
	40	6,10	4	11,0	22570.0220	22570.0420
	50	6,10	4	14,0	22570.0224	22570.0424
	63	6,10	4	18,0	22570.0228	22570.0428
M10	40	7,80	5	16,0	22570.0248	22570.0448
	50	7,80	5	21,0	22570.0250	22570.0450
	63	7,80	5	27,0	22570.0254	22570.0454
	80	7,80	5	36,0	22570.0258	22570.0458
M12	40	9,40	6	23,0	22570.0316	22570.0516
	63	9,40	6	39,0	22570.0320	22570.0520
	80	9,40	6	51,0	22570.0324	22570.0524
	100	9,40	6	65,0	22570.0328	22570.0528

APPLICATION EXAMPLE

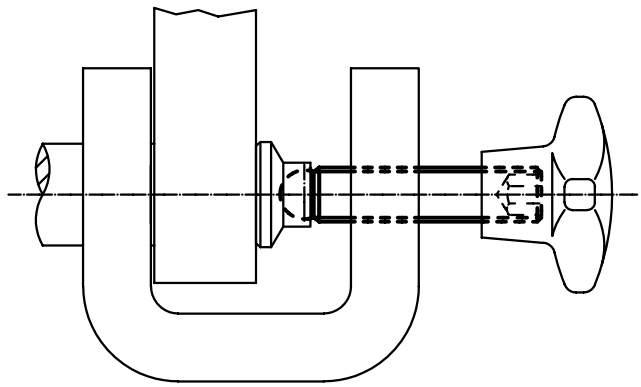

2

Mounting Pads

EH 22590.

PRODUCT DESCRIPTION

Mounting pads can be used as foot or thrust pad. Not parallel bearing surfaces up to 15° degrees can be compensated.

Material

Ball element
- Heat-treated steel, tempered, blackened
- Stainless steel 1.4305

Ball element with bolt
- Heat-treated steel, tempered, blackened
- Stainless steel 1.4305

Lock nut
- Steel, blackened, ISO 4032
- Steel, blackened, DIN 934
- Stainless Steel A2, ISO 4032
- Stainless Steel A2, DIN 934

Pad
- Heat-treated steel, blackened
- Stainless steel 1.4305
- Thermoplastic POM, white

MORE INFORMATION

Notes

For the versions d_1 = M10 and M12 the lock nut conforms to DIN 934.

DRAWING

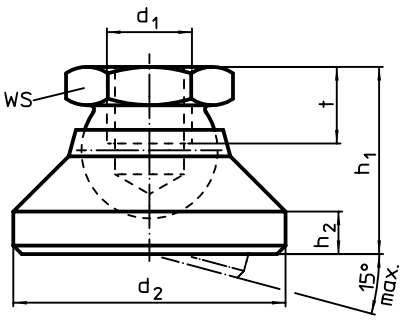

picture 1

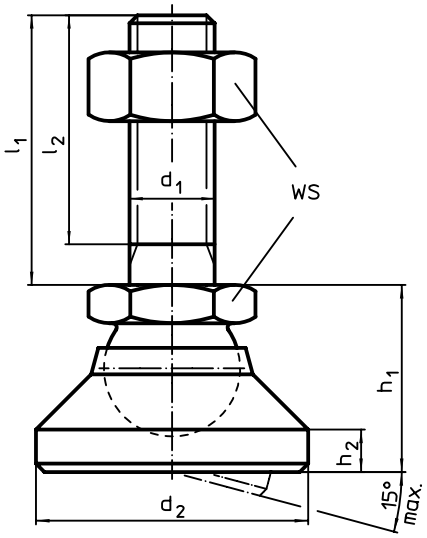

picture 2

ORDER INFORMATION

Dimensions							WS	Load capacity for static load max.				Art. No.		
d_1	l_1	d_2	l_2	h_1 ~	h_2	t			min.	max.		heat-treated steel	stainless steel	thermo-plastic
[mm]							[mm]	[kN]	[°C]		[g]			
pad and ball element – picture 1														
M 6	–	20	–	14	2,5	5,0	10	10	–	250	15	22590.0006	–	–
								8	–	250	15	–	22590.0206	–
M 8	–	25	–	18	4,0	7,0	13	18	–	250	33	22590.0008	–	–
								14	–	250	33	–	22590.0208	–
M10	–	32	–	22	5,0	9,0	17	20	–	250	66	22590.0010	–	–
								16	–	250	66	–	22590.0210	–
M12	–	40	–	26	6,0	11,0	19	35	–	250	112	22590.0012	–	–
								28	–	250	112	–	22590.0212	–
M16	–	50	–	32	7,0	13,5	24	45	–	250	220	22590.0016	–	–
								36	–	250	220	–	22590.0216	–
M20	–	60	–	42	8,0	17,0	30	55	–	250	413	22590.0020	–	–
								44	–	250	413	–	22590.0220	–
M24	–	60	–	45	9,5	19,0	36	65	–	250	462	22590.0024	–	–
								52	–	250	462	–	22590.0224	–

→

Dimensions							WS	Load capacity for static load max.				Art. No.		
d_1	l_1	d_2	l_2	h_1 ~	h_2	t			min.	max.		heat-treated steel	stainless steel	thermo-plastic
[mm]							[mm]	[kN]	[°C]		[g]			
pad from thermoplastic, ball element from stainless steel – picture 1														
M 6	–	20	–	14	2,5	5,0	10	4	-30	80	6	–	–	22590.0106
M 8	–	25	–	18	4,0	7,0	13	7	-30	80	13	–	–	22590.0108
M10	–	32	–	22	5,0	9,0	17	10	-30	80	26	–	–	22590.0110
M12	–	40	–	26	6,0	11,0	19	18	-30	80	40	–	–	22590.0112
M16	–	50	–	32	7,0	13,5	24	20	-30	80	75	–	–	22590.0116
M20	–	60	–	42	8,0	17,0	30	22	-30	80	150	–	–	22590.0120
M24	–	60	–	45	9,5	19,0	36	25	-30	80	184	–	–	22590.0124
pad and ball element with bolt from steel – picture 2														
M 6	**60**	20	57,0	14	2,5	–	10	10	–	250	29	22590.0410	–	–
								8	–	250	29	–	22590.0610	–
M 8	**80**	25	76,0	18	4,0	–	13	18	–	250	66	22590.0422	–	–
								14	–	250	66	–	22590.0622	–
M10	**100**	32	95,5	22	5,0	–	17	20	–	250	133	22590.0438	–	–
								16	–	250	133	–	22590.0638	–
	150	32	145,5	22	5,0	–	17	20	–	250	159	22590.0442	–	–
								16	–	250	159	–	22590.0642	–
M12	**100**	40	94,5	26	6,0	–	19	35	–	250	211	22590.0452	–	–
								28	–	250	211	–	22590.0652	–
	150	40	144,5	26	6,0	–	19	35	–	250	247	22590.0456	–	–
								28	–	250	247	–	22590.0656	–
M16	**100**	50	94,0	32	7,0	–	24	45	–	250	407	22590.0468	–	–
								36	–	250	407	–	22590.0668	–
	200	50	194,0	32	7,0	–	24	45	–	250	540	22590.0472	–	–
								36	–	250	540	–	22590.0672	–
M20	**100**	60	92,5	42	8,0	–	30	55	–	250	722	22590.0482	–	–
								44	–	250	722	–	22590.0682	–
	200	60	192,5	42	8,0	–	30	55	–	250	924	22590.0488	–	–
								44	–	250	924	–	22590.0688	–
M24	**100**	60	91,0	45	9,5	–	36	65	–	250	935	22590.0495	–	–
								52	–	250	935	–	22590.0695	–
	200	60	191,0	45	9,5	–	36	65	–	250	1231	22590.0498	–	–
								52	–	250	1231	–	22590.0698	–
pad from thermoplastic, ball element with bolt from stainless steel – picture 2														
M 6	**60**	20	57,0	14	2,5	–	10	4	-30	80	20	–	–	22590.0510
M 8	**80**	25	76,0	18	4,0	–	13	7	-30	80	46	–	–	22590.0522
M10	**100**	32	95,5	22	5,0	–	17	10	-30	80	92	–	–	22590.0538
	150	32	145,5	22	5,0	–	17	10	-30	80	118	–	–	22590.0542
M12	**100**	40	94,5	26	6,0	–	19	18	-30	80	139	–	–	22590.0552
	150	40	144,5	26	6,0	–	19	18	-30	80	173	–	–	22590.0556
M16	**100**	50	94,0	32	7,0	–	24	20	-30	80	264	–	–	22590.0568
	200	50	194,0	32	7,0	–	24	20	-30	80	393	–	–	22590.0572
M20	**100**	60	92,5	42	8,0	–	30	22	-30	80	463	–	–	22590.0582
	200	60	192,5	42	8,0	–	30	22	-30	80	664	–	–	22590.0588
M24	**100**	60	91,0	45	9,5	–	36	25	-30	80	662	–	–	22590.0595
	200	60	191,0	45	9,5	–	36	25	-30	80	960	–	–	22590.0598

APPLICATION EXAMPLE

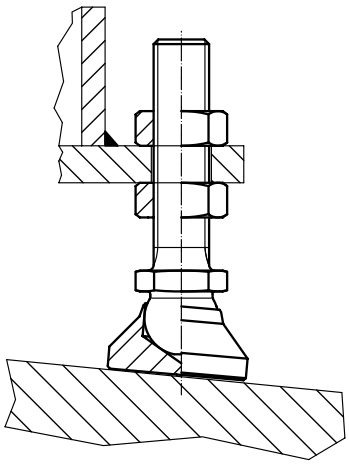

2

Mounting Pads • protected against slipping

EH 22590.

PRODUCT DESCRIPTION

Mounting pads can be used as foot or thrust pad. Not parallel bearing surfaces up to 15° degrees can be compensated.
The plastic cover on the mounting pad prevents slipping.

Material

Ball element
- Free cutting steel, induction-hardened, blackened.
- Stainless steel 1.4305

Ball element with bolt
- Heat-treated steel, blackened
- Stainless steel 1.4305

Rubber cab
- Rubber, black

Pad
- Heat-treated steel, tempered, blackened
- Stainless steel 1.4305
- Thermoplastic POM, white

MORE INFORMATION

Notes

For the versions d_1 = M10 and M12 the lock nut conforms to DIN 934.

DRAWING

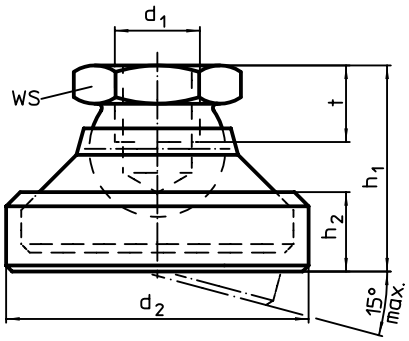

picture 1

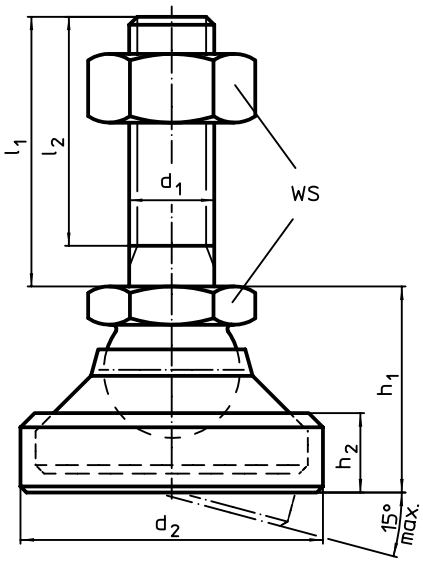

picture 2

ORDER INFORMATION

Dimensions d_1	l_1	d_2	l_2	h_1 ~	h_2	t [mm]	WS [mm]	Load capacity for static load max. [kN]	[g]	Art. No. heat-treated steel	stainless steel	thermo-plastic
pad and ball element – picture 1												
M 6	–	22,5	–	16,5	6,4	5,0	10	10	16	22590.1006	–	–
								8	16	–	22590.1206	–
M 8	–	28,0	–	20,6	8,3	7,0	13	18	36	22590.1008	–	–
								14	36	–	22590.1208	–
M10	–	36,0	–	26,0	11,0	9,0	17	20	72	22590.1010	–	–
								16	72	–	22590.1210	–
M12	–	45,0	–	30,5	13,2	11,0	19	35	123	22590.1012	–	–
								28	123	–	22590.1212	–
M16	–	56,0	–	37,5	15,5	13,5	24	45	241	22590.1016	–	–
								36	241	–	22590.1216	–
M20	–	67,0	–	49,5	19,5	17,0	30	55	453	22590.1020	–	–
								44	453	–	22590.1220	–
M24	–	69,0	–	55,0	24,0	19,0	36	65	518	22590.1024	–	–
								52	517	–	22590.1224	–

Dimensions							WS	Load capacity for static load max.		Art. No.		
d_1	l_1	d_2	l_2	h_1 ~	h_2	t				heat-treated steel	stainless steel	thermo-plastic
[mm]							[mm]	[kN]	[g]			
pad from thermoplastic, ball element from stainless steel – picture 1												
M 6	**–**	22,5	–	16,5	6,4	5,0	10	4	7	–	–	22590.1106
M 8	**–**	28,0	–	20,6	8,3	7,0	13	7	16	–	–	22590.1108
M10	**–**	36,0	–	26,0	11,0	9,0	17	10	32	–	–	22590.1110
M12	**–**	45,0	–	30,5	13,2	11,0	19	18	51	–	–	22590.1112
M16	**–**	56,0	–	37,5	15,5	13,5	24	20	96	–	–	22590.1116
M20	**–**	67,0	–	49,5	19,5	17,0	30	22	190	–	–	22590.1120
M24	**–**	69,0	–	55,0	24,0	19,0	36	25	240	–	–	22590.1124
pad and ball element with bolt from steel – picture 2												
M 6	**60**	22,5	57,0	16,5	6,4	–	10	10	30	22590.1410	–	–
								8	30	–	22590.1610	–
M 8	**80**	28,0	76,0	20,6	8,3	–	13	18	69	22590.1422	–	–
								14	69	–	22590.1622	–
M10	**100**	36,0	95,5	26,0	11,0	–	17	20	139	22590.1438	–	–
								16	139	–	22590.1638	–
	150	36,0	145,5	26,0	11,0	–	17	20	165	22590.1442	–	–
								16	165	–	22590.1642	–
M12	**100**	45,0	94,5	30,5	13,2	–	19	35	222	22590.1452	–	–
								28	222	–	22590.1652	–
	150	45,0	144,5	30,5	13,2	–	19	35	258	22590.1456	–	–
								28	258	–	22590.1656	–
M16	**100**	56,0	94,0	37,5	15,5	–	24	45	428	22590.1468	–	–
								36	428	–	22590.1668	–
	200	56,0	194,0	37,5	15,5	–	24	45	561	22590.1472	–	–
								36	561	–	22590.1672	–
M20	**100**	67,0	92,5	49,5	19,5	–	30	55	762	22590.1482	–	–
								44	762	–	22590.1682	–
	200	67,0	192,5	49,5	19,5	–	30	55	964	22590.1488	–	–
								44	964	–	22590.1688	–
M24	**100**	69,0	91,0	55,0	24,0	–	36	65	990	22590.1495	–	–
								52	991	–	22590.1695	–
	200	69,0	191,0	55,0	24,0	–	36	65	1287	22590.1498	–	–
								52	1287	–	22590.1698	–
pad from thermoplastic, ball element with bolt from stainless steel – picture 2												
M 6	**60**	22,5	57,0	16,5	6,4	–	10	4	21	–	–	22590.1510
M 8	**80**	28,0	76,0	20,6	8,3	–	13	7	49	–	–	22590.1522
M10	**100**	36,0	95,5	26,0	11,0	–	17	10	98	–	–	22590.1538
	150	36,0	145,5	26,0	11,0	–	17	10	124	–	–	22590.1542
M12	**100**	45,0	94,5	30,5	13,2	–	19	18	150	–	–	22590.1552
	150	45,0	144,5	30,5	13,2	–	19	18	184	–	–	22590.1556
M16	**100**	56,0	94,0	37,5	15,5	–	24	20	285	–	–	22590.1568
	200	56,0	194,0	37,5	15,5	–	24	20	414	–	–	22590.1572
M20	**100**	67,0	92,5	49,5	19,5	–	30	22	503	–	–	22590.1582
	200	67,0	192,5	49,5	19,5	–	30	22	704	–	–	22590.1588
M24	**100**	69,0	91,0	55,0	24,0	–	36	25	718	–	–	22590.1595
	200	69,0	191,0	55,0	24,0	–	36	25	1016	–	–	22590.1598

2

Mounting Pads • with fastening holes

EH 22590.

PRODUCT DESCRIPTION

Mounting pads can be used as foot or thrust pad. Not parallel bearing surfaces up to 15° degrees can be compensated.
Including two fastening holes in pad.

Material

Ball element
- Stainless steel 1.4305

Ball element with bolt
- Stainless steel 1.4305

Lock nut
- Stainless Steel A2, ISO 4032
- Stainless Steel A2, DIN 934

Pad
- Stainless steel 1.4305

MORE INFORMATION

Notes

For the versions d_1 = M10 and M12 the lock nut conforms to DIN 934.

DRAWING

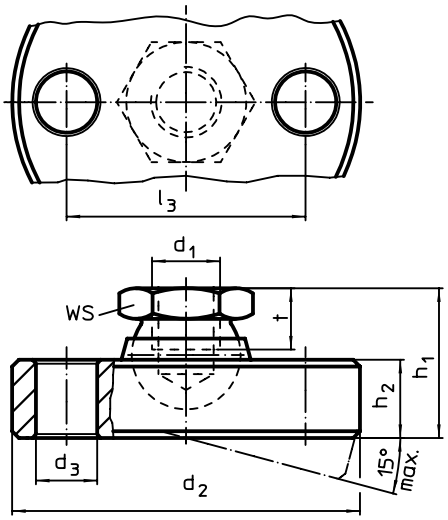

picture 1

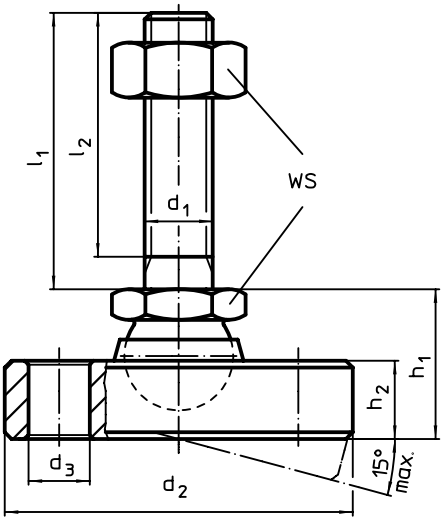

picture 2

ORDER INFORMATION

Dimensions									WS	Load capacity for static load max.		Art. No.
d_1	l_1	d_2 -0,5	d_3	l_2	l_3	h_1 ~	h_2	t				
[mm]									[mm]	[kN]	[g]	
pad and ball element from stainless steel – picture 1												
M 6	–	45	6,6	–	32	14	6,5	5,0	10	8	79	22590.0706
M 8	–	50	6,6	–	38	18	8,5	7,0	13	14	130	22590.0708
M10	–	60	9,0	–	44	22	11,5	9,0	17	16	250	22590.0710
M12	–	65	9,0	–	48	26	12,5	11,0	19	28	326	22590.0712
M16	–	70	9,0	–	54	32	13,5	13,5	24	36	427	22590.0716
M20	–	80	9,0	–	64	42	16,5	17,0	30	44	718	22590.0720
M24	–	100	11,0	–	78	45	20,5	19,0	36	52	1304	22590.0724
pad and ball element with bolt from stainless steel – picture 2												
M 6	**60**	45	6,6	57,0	32	14	6,5	–	10	8	93	22590.0810
M 8	**80**	50	6,6	76,0	38	18	8,5	–	13	14	163	22590.0822
M10	**100**	60	9,0	95,5	44	22	11,5	–	17	16	318	22590.0838
	150	60	9,0	145,5	44	22	11,5	–	17	16	341	22590.0842
M12	**100**	65	9,0	94,5	48	26	12,5	–	19	28	423	22590.0852
	150	65	9,0	144,5	48	26	12,5	–	19	28	459	22590.0856
M16	**100**	70	9,0	94,0	54	32	13,5	–	24	36	615	22590.0868
	200	70	9,0	194,0	54	32	13,5	–	24	36	746	22590.0872
M20	**100**	80	9,0	92,5	64	42	16,5	–	30	44	1034	22590.0882
	200	80	9,0	192,5	64	42	16,5	–	30	44	1231	22590.0888
M24	**100**	100	11,0	91,0	78	45	20,5	–	36	52	1775	22590.0895
	200	100	11,0	191,0	78	45	20,5	–	36	52	2075	22590.0898

Fulcrum Screws

EH 22591.

PRODUCT DESCRIPTION

Can be used as screw-in foot or thrust pad.
Compact design for simple levelling by means of the spanner flat at the bushing or preferably by means of an internal hexagon.

Material

Body
- Heat-treated steel, tempered, blackened
- Stainless steel 1.4305

Ball element
- Heat-treated steel, tempered, blackened
- Stainless steel 1.4305

MORE INFORMATION

Notes

The fulcrum screws may exclusively be exposed to static loading.

DRAWING

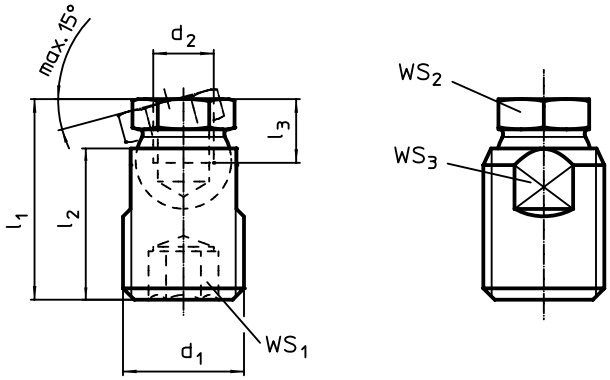

ORDER INFORMATION

Dimensions					WS1	WS2	WS3	Load capacity for static load max.		Art. No.
d1	d2	l1 ±0,5	l2	l3 min.						
		[mm]			[mm]	[mm]	[mm]	[kN]	[g]	
steel										
M12	**M 6**	21,2	16	5,0	6	9	10	10	11	22591.0006
M16	**M 8**	26,5	20	7,0	8	12	14	18	24	22591.0008
M24	**M10**	39,9	30	9,0	12	19	20	35	87	22591.0010
	M12	39,9	30	11,0	12	19	20	35	82	22591.0012
M30 x 2	**M16**	47,4	36	13,5	12	24	27	45	165	22591.0016
stainless steel										
M12	**M 6**	21,2	16	5,0	6	9	10	8	11	22591.0206
M16	**M 8**	26,5	20	7,0	8	12	14	14	24	22591.0208
M24	**M10**	39,9	30	9,0	12	19	20	28	87	22591.0210
	M12	39,9	30	11,0	12	19	20	28	82	22591.0212
M30 x 2	**M16**	47,4	36	13,5	12	24	27	36	165	22591.0216

APPLICATION EXAMPLE

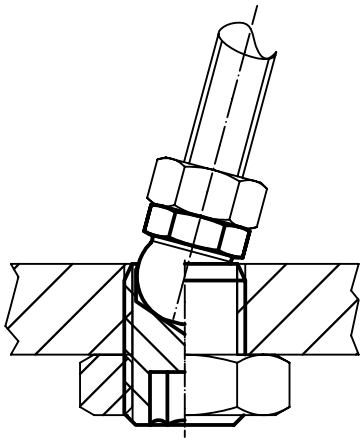

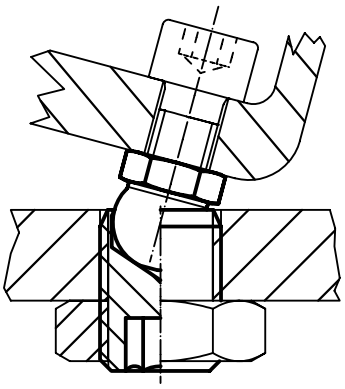

2

Support Legs

EH 22593.

PRODUCT DESCRIPTION

The support legs are universally usable as adjustable legs.
The plate is screwed to the threaded pin and nut by a stainless steel fastening screw, and is also glued.

Material

Threaded pin
- Steel, zinc-plated by galvanization, passivated
- Stainless steel 1.4305

Nut
- Steel, zinc-plated by galvanization, passivated
- Stainless steel 1.4305

Lock nut
- Steel, zinc-coated by galvanisation, passivated, ISO 4032
- Stainless Steel A2, ISO 4032

Pad
- Steel, zinc-plated by galvanization, passivated
- Stainless steel 1.4301, vibratory ground

MORE INFORMATION

Further products

Support Legs, with non-slip . . . . . → p. 269

DRAWING

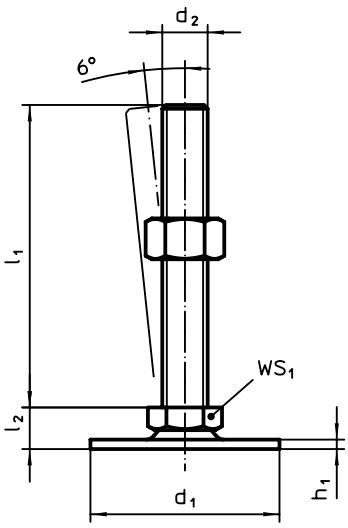

picture 1

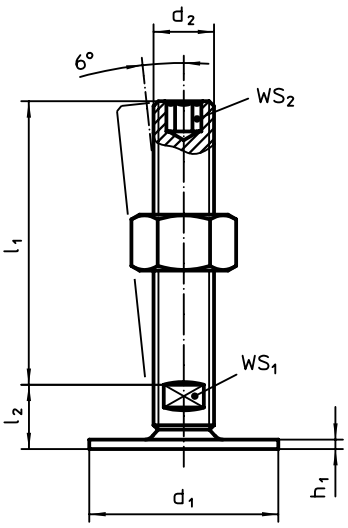

picture 2

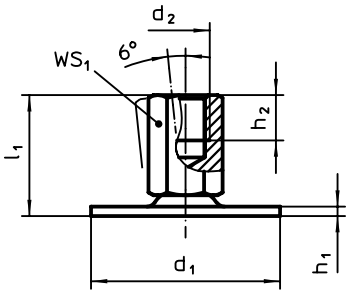

picture 3

ORDER INFORMATION

Dimensions						WS1	WS2		Art. No.	
d1	d2	l1	h1	h2	l2				steel	stainless steel
[mm]						[mm]	[mm]	[g]		
with screw – picture 1										
40	M 8	40	2,0	–	11	17	–	47	22593.0005	22593.1505
		50	2,0	–	11	17	–	51	22593.0010	22593.1510
		63	2,0	–	11	17	–	55	22593.0015	22593.1515
	M10	50	2,0	–	11	17	–	64	22593.0020	22593.1520
		60	2,0	–	11	17	–	67	22593.0025	22593.1525
		80	2,0	–	11	17	–	76	22593.0030	22593.1530
		100	2,0	–	11	17	–	87	22593.0035	22593.1535
	M12	60	2,0	–	11	17	–	83	22593.0040	22593.1540
		80	2,0	–	11	17	–	103	22593.0045	22593.1545
		100	2,0	–	11	17	–	118	22593.0050	22593.1550
		125	2,0	–	11	17	–	140	22593.0055	22593.1555

→

Dimensions						WS$_1$	WS$_2$		Art. No.	
d$_1$	d$_2$	l$_1$	h$_1$	h$_2$	l$_2$				steel	stainless steel
[mm]						[mm]	[mm]	[g]		
50	M 8	40	2,5	–	11	17	–	62	22593.0060	22593.1560
		50	2,5	–	11	17	–	69	22593.0065	22593.1565
		63	2,5	–	11	17	–	72	22593.0070	22593.1570
	M10	50	2,5	–	11	17	–	82	22593.0075	22593.1575
		60	2,5	–	11	17	–	88	22593.0080	22593.1580
		80	2,5	–	11	17	–	98	22593.0085	22593.1585
		100	2,5	–	11	17	–	108	22593.0090	22593.1590
	M12	60	2,5	–	11	17	–	106	22593.0095	22593.1595
		80	2,5	–	11	17	–	119	22593.0100	22593.1600
		100	2,5	–	11	17	–	137	22593.0105	22593.1605
		125	2,5	–	11	17	–	153	22593.0110	22593.1610
60	M 8	40	2,5	–	11	17	–	84	22593.0115	22593.1615
		50	2,5	–	11	17	–	83	22593.0120	22593.1620
		63	2,5	–	11	17	–	100	22593.0125	22593.1625
	M10	50	2,5	–	11	17	–	100	22593.0130	22593.1630
		60	2,5	–	11	17	–	104	22593.0135	22593.1635
		80	2,5	–	11	17	–	115	22593.0140	22593.1640
		100	2,5	–	11	17	–	125	22593.0145	22593.1645
	M12	60	2,5	–	11	17	–	121	22593.0150	22593.1650
		80	2,5	–	11	17	–	136	22593.0155	22593.1655
		100	2,5	–	11	17	–	151	22593.0160	22593.1660
		125	2,5	–	11	17	–	167	22593.0165	22593.1665
80	M 8	40	3,0	–	12	17	–	144	22593.0170	22593.1670
		50	3,0	–	12	17	–	60	22593.0175	22593.1675
		63	3,0	–	12	17	–	152	22593.0180	22593.1680
	M10	50	3,0	–	12	17	–	166	22593.0185	22593.1685
		60	3,0	–	12	17	–	180	22593.0190	22593.1690
		80	3,0	–	12	17	–	181	22593.0195	22593.1695
		100	3,0	–	12	17	–	187	22593.0200	22593.1700
	M12	60	3,0	–	12	17	–	187	22593.0205	22593.1705
		80	3,0	–	12	17	–	201	22593.0210	22593.1710
		100	3,0	–	12	17	–	215	22593.0215	22593.1715
		125	3,0	–	12	17	–	233	22593.0220	22593.1720
with screw – picture 2										
40	M16	75	2,0	–	17	12	8	153	22593.0605	22593.2105
		100	2,0	–	17	12	8	192	22593.0610	22593.2110
		125	2,0	–	17	12	8	215	22593.0615	22593.2115
		150	2,0	–	17	12	8	251	22593.0620	22593.2120
		200	2,0	–	17	12	8	320	22593.0625	22593.2125
50	M16	75	2,5	–	17	12	8	176	22593.0630	22593.2130
		100	2,5	–	17	12	8	205	22593.0635	22593.2135
		125	2,5	–	17	12	8	236	22593.0640	22593.2140
		150	2,5	–	17	12	8	262	22593.0645	22593.2145
		200	2,5	–	17	12	8	331	22593.0650	22593.2150
60	M16	75	2,5	–	17	12	8	195	22593.0655	22593.2155
		100	2,5	–	17	12	8	225	22593.0660	22593.2160
		125	2,5	–	17	12	8	259	22593.0665	22593.2165
		150	2,5	–	17	12	8	283	22593.0670	22593.2170
		200	2,5	–	17	12	8	348	22593.0675	22593.2175
80	M16	75	3,0	–	18	12	8	252	22593.0680	22593.2180
		100	3,0	–	18	12	8	300	22593.0685	22593.2185
		125	3,0	–	18	12	8	319	22593.0690	22593.2190
		150	3,0	–	18	12	8	360	22593.0695	22593.2195
		200	3,0	–	18	12	8	414	22593.0700	22593.2200
	M20	75	3,0	–	19	15	10	347	22593.0705	22593.2205
		100	3,0	–	19	15	10	390	22593.0710	22593.2210
		125	3,0	–	19	15	10	450	22593.0715	22593.2215
		150	3,0	–	19	15	10	494	22593.0720	22593.2220
		200	3,0	–	19	15	10	595	22593.0725	22593.2225
	M24	100	3,0	–	22	19	12	542	22593.0730	22593.2230
		125	3,0	–	22	19	12	612	22593.0735	22593.2235
		150	3,0	–	22	19	12	650	22593.0740	22593.2240
		200	3,0	–	22	19	12	820	22593.0745	22593.2245

→

Dimensions						WS$_1$	WS$_2$		Art. No.	
d$_1$	d$_2$	l$_1$	h$_1$	h$_2$	l$_2$				steel	stainless steel
[mm]						[mm]	[mm]	[g]		
with female thread – picture 3										
40	**M 8**	**25**	2,0	8	–	14	–	41	22593.1005	22593.2505
	M10	**28**	2,0	10	–	14	–	40	22593.1010	22593.2510
	M12	**31**	2,0	12	–	17	–	68	22593.1015	22593.2515
	M16	**37**	2,0	16	–	22	–	100	22593.1020	22593.2520
50	**M 8**	**25**	2,5	8	–	14	–	60	22593.1025	22593.2525
	M10	**28**	2,5	10	–	14	–	60	22593.1030	22593.2530
	M12	**32**	2,5	12	–	17	–	81	22593.1035	22593.2535
	M16	**37**	2,5	16	–	22	–	120	22593.1040	22593.2540
60	**M 8**	**25**	2,5	8	–	14	–	80	22593.1045	22593.2545
	M10	**28**	2,5	10	–	14	–	79	22593.1050	22593.2550
	M12	**32**	2,5	12	–	17	–	97	22593.1055	22593.2555
	M16	**37**	2,5	16	–	22	–	130	22593.1060	22593.2560
80	**M 8**	**26**	3,0	8	–	14	–	141	22593.1065	22593.2565
	M10	**29**	3,0	10	–	14	–	152	22593.1070	22593.2570
	M12	**32**	3,0	12	–	17	–	160	22593.1075	22593.2575
	M16	**38**	3,0	16	–	22	–	194	22593.1080	22593.2580
	M20	**45**	3,0	20	–	27	–	260	22593.1085	22593.2585

Support Legs • protected against slipping

EH 22593.

PRODUCT DESCRIPTION

The support legs are universally usable as adjustable legs.
In this version with a rubber cap, sensitive support surfaces are protected, and slipping is prevented.
The plate is screwed to the threaded pin and nut by a stainless steel fastening screw, and is also glued.

Material

Threaded pin
- Steel, zinc-plated by galvanization, passivated
- Stainless steel 1.4305

Rubber cab
- Rubber, black

Nut
- Steel, zinc-plated by galvanization, passivated
- Stainless steel 1.4305

Lock nut
- Steel, zinc-coated by galvanisation, passivated, ISO 4032
- Stainless Steel A2, ISO 4032

Pad
- Steel, zinc-plated by galvanization, passivated
- Stainless steel 1.4301, vibratory ground

MORE INFORMATION

Further products

Support Legs . . . . . → p. 266

DRAWING

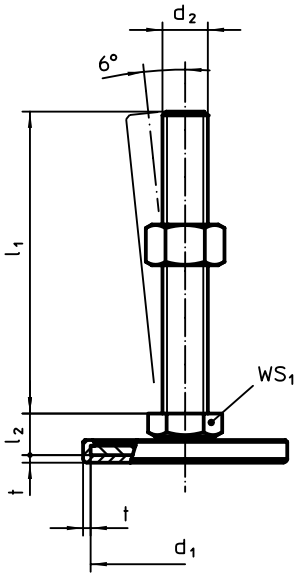

picture 1

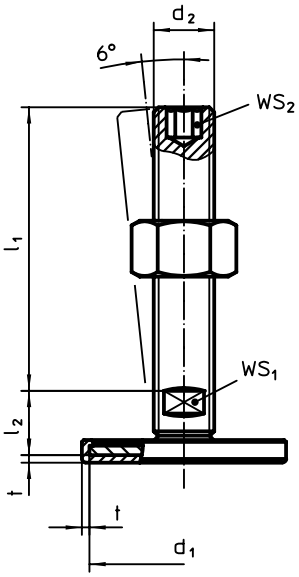

picture 2

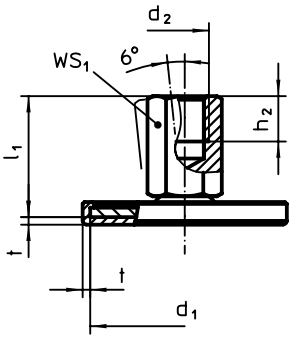

picture 3

ORDER INFORMATION

Dimensions						WS1	WS2		Art. No.	
d1	d2	l1	h2	l2	t				steel	stainless steel
[mm]						[mm]	[mm]	[g]		
with screw – picture 1										
40	M 8	40	–	11	1,5	17	–	50	22593.0305	22593.1805
		50	–	11	1,5	17	–	54	22593.0310	22593.1810
		63	–	11	1,5	17	–	57	22593.0315	22593.1815
	M10	50	–	11	1,5	17	–	67	22593.0320	22593.1820
		60	–	11	1,5	17	–	73	22593.0325	22593.1825
		80	–	11	1,5	17	–	82	22593.0330	22593.1830
		100	–	11	1,5	17	–	88	22593.0335	22593.1835
	M12	60	–	11	1,5	17	–	91	22593.0340	22593.1840
		80	–	11	1,5	17	–	105	22593.0345	22593.1845
		100	–	11	1,5	17	–	120	22593.0350	22593.1850
		125	–	11	1,5	17	–	140	22593.0355	22593.1855

→

Dimensions						WS_1	WS_2		Art. No.	
d_1	d_2	l_1	h_2	l_2	t				steel	stainless steel
[mm]						[mm]	[mm]	[g]		
50	M 8	40	–	11	2,0	17	–	71	22593.0360	22593.1860
		50	–	11	2,0	17	–	72	22593.0365	22593.1865
		63	–	11	2,0	17	–	79	22593.0370	22593.1870
	M10	50	–	11	2,0	17	–	87	22593.0375	22593.1875
		60	–	11	2,0	17	–	91	22593.0380	22593.1880
		80	–	11	2,0	17	–	103	22593.0385	22593.1885
		100	–	11	2,0	17	–	113	22593.0390	22593.1890
	M12	60	–	11	2,0	17	–	112	22593.0395	22593.1895
		80	–	11	2,0	17	–	120	22593.0400	22593.1900
		100	–	11	2,0	17	–	140	22593.0405	22593.1905
		125	–	11	2,0	17	–	160	22593.0410	22593.1910
60	M 8	40	–	11	2,0	17	–	91	22593.0415	22593.1915
		50	–	11	2,0	17	–	95	22593.0420	22593.1920
		63	–	11	2,0	17	–	100	22593.0425	22593.1925
	M10	50	–	11	2,0	17	–	110	22593.0430	22593.1930
		60	–	11	2,0	17	–	110	22593.0435	22593.1935
		80	–	11	2,0	17	–	122	22593.0440	22593.1940
		100	–	11	2,0	17	–	132	22593.0445	22593.1945
	M12	60	–	11	2,0	17	–	129	22593.0450	22593.1950
		80	–	11	2,0	17	–	150	22593.0455	22593.1955
		100	–	11	2,0	17	–	158	22593.0460	22593.1960
		125	–	11	2,0	17	–	180	22593.0465	22593.1965
80	M 8	40	–	12	2,0	17	–	158	22593.0470	22593.1970
		50	–	12	2,0	17	–	164	22593.0475	22593.1975
		63	–	12	2,0	17	–	166	22593.0480	22593.1980
	M10	50	–	12	2,0	17	–	176	22593.0485	22593.1985
		60	–	12	2,0	17	–	181	22593.0490	22593.1990
		80	–	12	2,0	17	–	192	22593.0495	22593.1995
		100	–	12	2,0	17	–	200	22593.0500	22593.2000
	M12	60	–	12	2,0	17	–	199	22593.0505	22593.2005
		80	–	12	2,0	17	–	213	22593.0510	22593.2010
		100	–	12	2,0	17	–	230	22593.0515	22593.2015
		125	–	12	2,0	17	–	245	22593.0520	22593.2020
with screw – picture 2										
40	M16	75	–	17	1,5	12	8	157	22593.0805	22593.2305
		100	–	17	1,5	12	8	180	22593.0810	22593.2310
		125	–	17	1,5	12	8	220	22593.0815	22593.2315
		150	–	17	1,5	12	8	254	22593.0820	22593.2320
		200	–	17	1,5	12	8	300	22593.0825	22593.2325
50	M16	75	–	17	2,0	12	8	177	22593.0830	22593.2330
		100	–	17	2,0	12	8	213	22593.0835	22593.2335
		125	–	17	2,0	12	8	241	22593.0840	22593.2340
		150	–	17	2,0	12	8	280	22593.0845	22593.2345
		200	–	17	2,0	12	8	340	22593.0850	22593.2350
60	M16	75	–	17	2,0	12	8	200	22593.0855	22593.2355
		100	–	17	2,0	12	8	220	22593.0860	22593.2360
		125	–	17	2,0	12	8	260	22593.0865	22593.2365
		150	–	17	2,0	12	8	290	22593.0870	22593.2370
		200	–	17	2,0	12	8	360	22593.0875	22593.2375
80	M16	75	–	18	2,0	12	8	270	22593.0880	22593.2380
		100	–	18	2,0	12	8	299	22593.0885	22593.2385
		125	–	18	2,0	12	8	332	22593.0890	22593.2390
		150	–	18	2,0	12	8	380	22593.0895	22593.2395
		200	–	18	2,0	12	8	400	22593.0900	22593.2400
	M20	75	–	19	2,0	15	10	360	22593.0905	22593.2405
		100	–	19	2,0	15	10	400	22593.0910	22593.2410
		125	–	19	2,0	15	10	459	22593.0915	22593.2415
		150	–	19	2,0	15	10	507	22593.0920	22593.2420
		200	–	19	2,0	15	10	614	22593.0925	22593.2425
	M24	100	–	22	2,0	19	12	560	22593.0930	22593.2430
		125	–	22	2,0	19	12	620	22593.0935	22593.2435
		150	–	22	2,0	19	12	700	22593.0940	22593.2440
		200	–	22	2,0	19	12	860	22593.0945	22593.2445

→

Dimensions						WS$_1$	WS$_2$		Art. No.	
d$_1$	d$_2$	l$_1$	h$_2$	l$_2$	t				steel	stainless steel
[mm]						[mm]	[mm]	[g]		
with female thread – picture 3										
40	**M 8**	**25**	8	–	1,5	14	–	49	22593.1105	22593.2605
	M10	**28**	10	–	1,5	14	–	47	22593.1110	22593.2610
	M12	**31**	12	–	1,5	17	–	60	22593.1115	22593.2615
	M16	**37**	16	–	1,5	22	–	91	22593.1120	22593.2620
50	**M 8**	**25**	8	–	2,0	14	–	65	22593.1125	22593.2625
	M10	**28**	10	–	2,0	14	–	65	22593.1130	22593.2630
	M12	**32**	12	–	2,0	17	–	86	22593.1135	22593.2635
	M16	**37**	16	–	2,0	22	–	120	22593.1140	22593.2640
60	**M 8**	**25**	8	–	2,0	14	–	90	22593.1145	22593.2645
	M10	**28**	10	–	2,0	14	–	84	22593.1150	22593.2650
	M12	**32**	12	–	2,0	17	–	100	22593.1155	22593.2655
	M16	**37**	16	–	2,0	22	–	138	22593.1160	22593.2660
80	**M 8**	**26**	8	–	2,0	14	–	155	22593.1165	22593.2665
	M10	**29**	10	–	2,0	14	–	160	22593.1170	22593.2670
	M12	**32**	12	–	2,0	17	–	180	22593.1175	22593.2675
	M16	**38**	16	–	2,0	22	–	220	22593.1180	22593.2680
	M20	**45**	20	–	2,0	27	–	300	22593.1185	22593.2685

2

Support Legs • impact cushioning

EH 22594.

PRODUCT DESCRIPTION

The support legs are universally usable as adjustable legs.
These support legs with a rubber foot have a damping, noise-reducing effect, and prevent damage to the support surface.

Material

Body
- NBR

Screw
- Steel, zinc-plated by galvanization

disc
- Steel, zinc-plated by galvanization

DRAWING

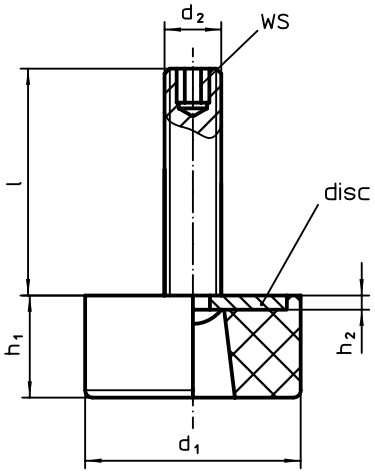

ORDER INFORMATION

Dimensions						Load capacity for static load max.				Art. No.
d_1	l	d_2	h_1	h_2	WS		min.	max.		
[mm]						[N]	[°C]		[g]	
19	30	M 6	14	1,5	3	240	-30	120	12	22594.0005
	45	M 6	14	1,5	3	240	-30	120	14	22594.0010
25	30	M 6	16	1,5	3	540	-30	120	20	22594.0015
	45	M 6	16	1,5	3	540	-30	120	22	22594.0020
32	40	M 8	18	2,0	4	840	-30	120	37	22594.0025
	65	M 8	18	2,0	4	840	-30	120	40	22594.0030
38	40	M 8	20	2,0	4	920	-30	120	52	22594.0035
	65	M 8	20	2,0	4	920	-30	120	57	22594.0040
50	45	M10	22	2,5	5	2500	-30	120	100	22594.0045
	70	M10	22	2,5	5	2500	-30	120	110	22594.0050
64	45	M10	26	2,5	5	3700	-30	120	150	22594.0055
	70	M10	26	2,5	5	3700	-30	120	177	22594.0060

Seating Elements • with plastic contact surface, orienting

EH 22600.

PRODUCT DESCRIPTION

Can be used as a screw-in foot or thrust pad.
The plastic coating is gentle and protects high-quality surfaces. In addition, the oscillating seating is suitable for non-parallel surfaces.

Material

Ball element
- Stainless steel 1.4305

Nut
- Stainless steel A2

Pad
- Plastic (PEEK), blue

MORE INFORMATION

Notes
Special types on request.

DRAWING

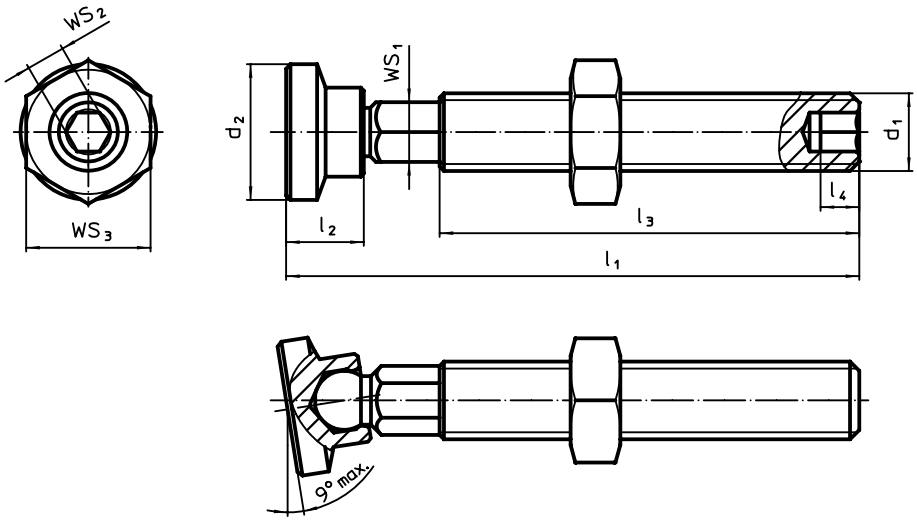

ORDER INFORMATION

Dimensions						WS1	WS2	WS3				Art. No.
d1	l1 ±1	d2	l2	l3	l4				min.	max.		
[mm]						[mm]	[mm]	[mm]	[°C]		[g]	
M 5	**37,0**	8,5	5,0	27,0	2,5	4,0	2,5	8	-60	250	6	22600.0005
M 6	**44,0**	8,5	5,0	31,5	3,0	4,5	3,0	10	-60	250	9	22600.0006
M 8	**63,3**	12,5	8,7	49,0	4,0	6,0	4,0	13	-60	250	25	22600.0008
M10	**73,3**	12,5	8,7	68,9	5,0	8,0	5,0	17	-60	250	48	22600.0010
M12	**84,4**	16,8	12,0	64,3	6,0	9,0	6,0	19	-60	250	74	22600.0012
M16	**84,4**	16,8	12,0	64,0	8,0	11,0	8,0	24	-60	250	125	22600.0016

2

Grippers round/square • with hard metal insert, ribbed

EH 22620.

PRODUCT DESCRIPTION

Basic element to be mounted into clamping devices, clamping jaws, clamping arms, claw feed systems and so forth.
For transmission of high turning moments and holding forces, e.g. on cast and forged pieces.

Material

Body
- Tool steel, blackened

Ribbing
- Hard metal plate, brazed-in

Assembly

Square type suitable for alignments, thus providing a bearing surface for high holding forces.

DRAWING

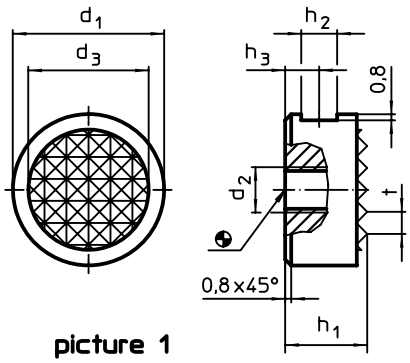

picture 1

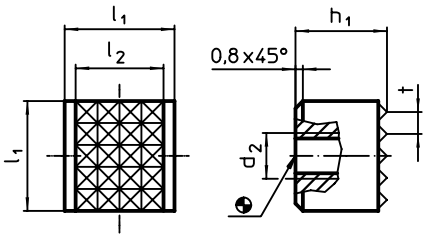

picture 2

ORDER INFORMATION

Dimensions										Art. No.
d_1 -0,13	h_1 -0,13	l_1 -0,13	d_2	d_3	h_2	h_3	l_2	t	[g]	
				[mm]						
round – picture 1										
10	**10**	–	M5	7,9	4,75	4,5	–	2,3	5	22620.0010
	12	–	M5	7,9	4,75	6,0	–	2,3	6	22620.0012
12	**10**	–	M5	9,5	4,75	4,5	–	3,0	8	22620.0020
	12	–	M5	9,5	4,75	6,0	–	3,0	9	22620.0022
16	**10**	–	M6	12,7	4,75	4,5	–	3,0	14	22620.0060
	12	–	M6	12,7	4,75	6,0	–	3,0	17	22620.0062
20	**10**	–	M6	15,9	4,75	4,5	–	3,0	23	22620.0080
	12	–	M6	15,9	4,75	6,0	–	3,0	27	22620.0082
25	**10**	–	M6	19,0	4,75	4,5	–	3,0	36	22620.0100
	12	–	M6	19,0	4,75	6,0	–	3,0	43	22620.0102
square – picture 2										
–	**10**	**12**	M5	–	–	–	10,3	3,0	11	22620.0152
	12	**12**	M5	–	–	–	10,3	3,0	12	22620.0154

APPLICATION EXAMPLE

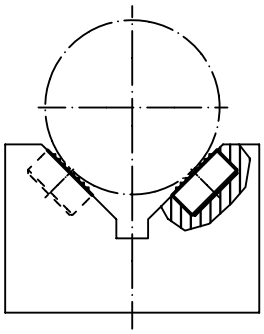

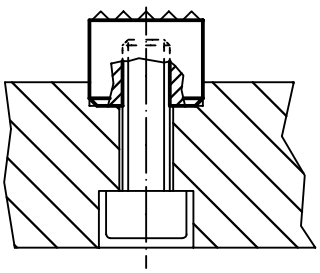

Hard Metal Inserts • for locating hole

EH 22620.

PRODUCT DESCRIPTION

Basic element to be mounted into clamping devices, clamping jaws, clamping arms, claw feed systems and so forth.
Zero play transmission of high holding forces, e.g. on cast or forged pieces.

Material

Insert
- Hard metal, ribbed
- Hard metal, pointed

Body
- Heat-treated steel, tempered, phosphated

Assembly

Assembly via a locating hole, the insert can be fastened by means of a screw.

DRAWING

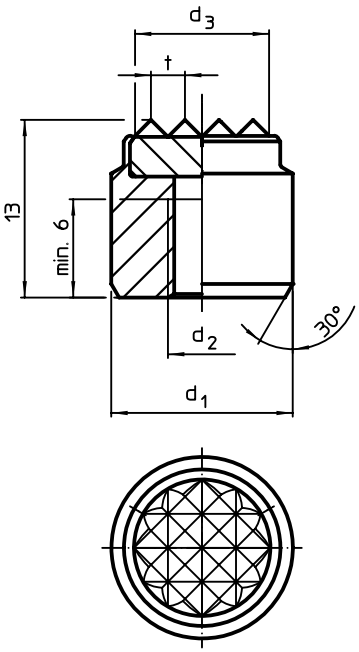

picture 1

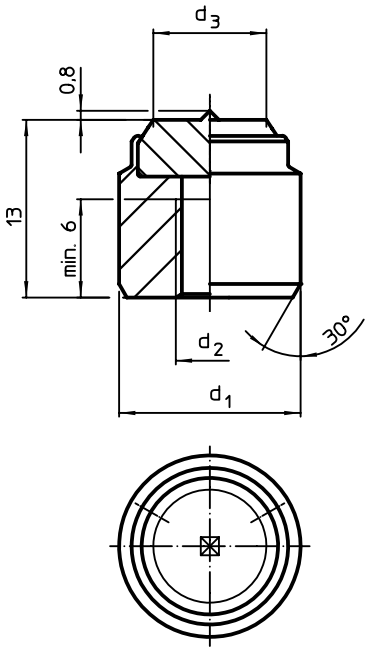

picture 2

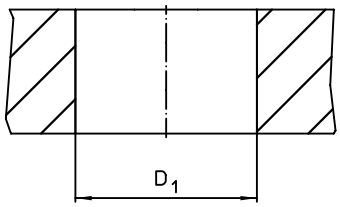

ORDER INFORMATION

Dimensions				Location hole		Art. No.
d_1 n6	d_2	d_3 ~	t	D_1 H7		
[mm]				[mm]	[g]	
ribbed – picture 1						
10	M5	7,7	2	10	8,0	22620.0208
14	M6	10,6	2	14	15,0	22620.0211
16	M6	11,9	3	16	20,0	22620.0213
20	M6	16,0	3	20	32,0	22620.0215
25	M6	21,0	3	25	51,0	22620.0217
pointed – picture 2						
10	M5	6,3	–	10	7,8	22620.0228
14	M6	9,3	–	14	16,0	22620.0231
16	M6	10,0	–	16	20,0	22620.0233

2

Hard Metal Inserts • front mounting

EH 22620.

PRODUCT DESCRIPTION

Basic element to be mounted into clamping devices, clamping jaws, clamping arms, claw feed systems and so forth.
The model with front installation is a particularly good option for applications that cannot be mounted from the rear.

Material

Insert
- Hard metal, ribbed

Body
- Heat-treated steel, tempered, phosphated

Assembly

Installation is performed using a locating hole, and the insert can be fastened from the front using a cap screw.

DRAWING

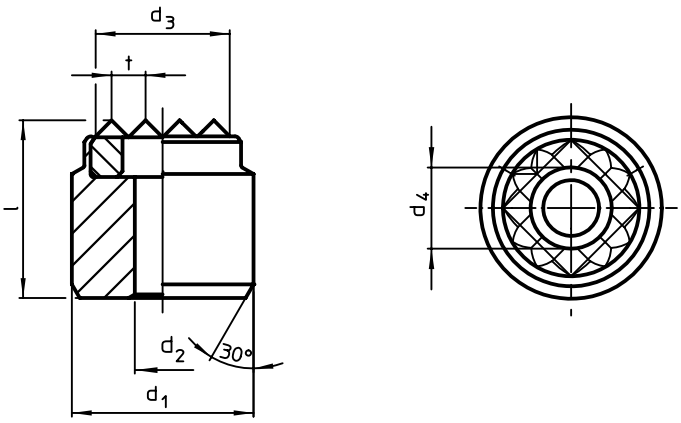

ORDER INFORMATION

Dimensions						For screws		Art. No.
d_1 n6	d_2	d_3 ~	d_4	l	t			
[mm]						[mm]	[g]	
20	4,5	16	7,5	13	3	M4	29	22620.0415
25	4,5	21	7,5	13	3	M4	49	22620.0417

APPLICATION EXAMPLE

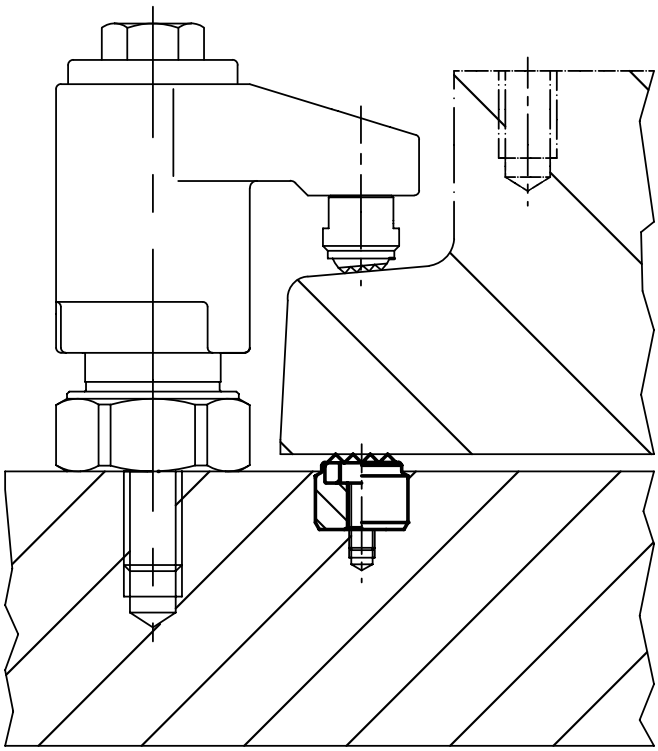

Hard Metal Inserts

EH 22620.

PRODUCT DESCRIPTION

Basic element to be mounted into clamping devices, clamping jaws, clamping arms, claw feed systems and so forth.
For an abrasion-proof transmission of high holding forces, e. g. on cast or forged pieces.

Material

Insert
- Hard metal, ribbed
- Hard metal, pointed

Assembly

Mounting can take place by either soldering, glueing or pressing in. The three positioning tabs guarantee exact centering and when being glued or pressed in, article is secured against rotating. Depending on the individual element choose a mounting diameter between d_1 and d_2.

DRAWING

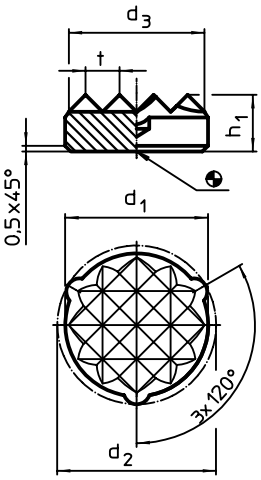

picture 1

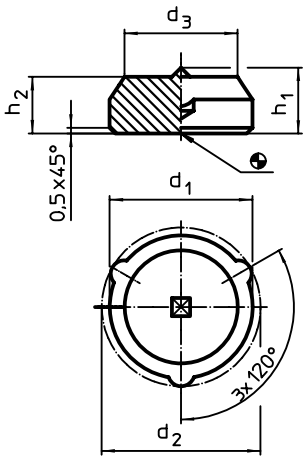

picture 2

ORDER INFORMATION

Dimensions							Art. No.
d_1	d_2 ±0,2	d_3 ~	h_1	h_2	t		
[mm]						[g]	
ribbed – picture 1							
8,3 ±0,10	9,1	7,7	5,0	–	2	3,3	22620.0608
11,3 ±0,10	12,1	10,6	5,0	–	2	6,1	22620.0611
12,6 ±0,10	13,4	11,9	5,0	–	3	7,1	22620.0613
16,6 ±0,15	17,4	16,0	5,0	–	3	12,0	22620.0615
21,6 ±0,15	22,4	21,0	5,0	–	3	20,0	22620.0617
pointed – picture 2							
8,3 ±0,10	9,1	6,3	5,8	5	–	3,3	22620.0628
11,3 ±0,10	12,1	9,3	5,8	5	–	6,7	22620.0631
12,6 ±0,10	13,4	10,0	5,8	5	–	8,2	22620.0633

2

Locating and Seating Pins • DIN 6321

EH 22630.

PRODUCT DESCRIPTION

Cylindric locating pins for locating workpieces in toleranced holes and also to be used as stops and feet.
Flattened locating pin used to overcome differences in tolerances, between holes or to position an element in one direction only.
The contact surface of the seating pin has no centre (picture 1)

Material

- Tool steel, hardened, ground

DRAWING

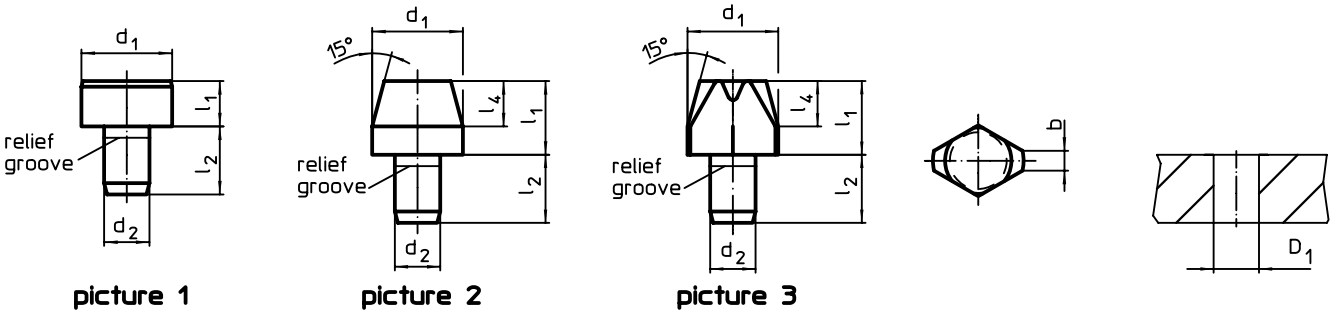

ORDER INFORMATION

Dimensions						Location hole		Art. No.
d_1 g6	l_1	b	d_2 n6	l_2	l_4	D_1 H7		
[mm]						[mm]	[g]	
seating pin, DIN 6321 form A, tolerance l_1 = h9 – picture 1								
6	**5**	–	4	6	–	4	1,8	**22630.0011**
10	**6**	–	6	9	–	6	5,7	**22630.0012**
16	**8**	–	8	12	–	8	17,0	**22630.0013**
25	**10**	–	12	18	–	12	50,0	**22630.0014**
locating pin, cylindric, DIN 6321, form B – picture 2								
6	**7**	–	4	6	4	4	2,2	**22630.0020**
	12	–	4	6	4	4	3,0	**22630.0021**
8	**10**	–	6	9	6	6	5,4	**22630.0022**
	16	–	6	9	6	6	8,0	**22630.0023**
10	**10**	–	6	9	6	6	7,4	**22630.0024**
	18	–	6	9	6	6	12,0	**22630.0025**
12	**10**	–	6	9	6	6	10,0	**22630.0026**
	18	–	6	9	6	6	17,0	**22630.0027**
16	**13**	–	8	12	8	8	23,0	**22630.0028**
	22	–	8	12	8	8	36,0	**22630.0029**
20	**15**	–	12	18	9	12	47,0	**22630.0030**
	25	–	12	18	9	12	72,0	**22630.0031**
25	**15**	–	12	18	9	12	66,0	**22630.0032**
	25	–	12	18	9	12	106,0	**22630.0033**

→

Dimensions						Location hole		Art. No.
d_1 g6	l_1	b	d_2 n6	l_2	l_4	D_1 H7		
[mm]						[mm]	[g]	
locating pin, flattened, DIN 6321, form C – picture 3								
6	**7**	1,0	4	6	4	4	1,8	**22630.0040**
	12	1,0	4	6	4	4	2,0	**22630.0041**
8	**10**	1,6	6	9	6	6	4,5	**22630.0042**
	16	1,6	6	9	6	6	6,0	**22630.0043**
10	**10**	2,5	6	9	6	6	6,0	**22630.0044**
	18	2,5	6	9	6	6	9,0	**22630.0045**
12	**10**	2,5	6	9	6	6	7,0	**22630.0046**
	18	2,5	6	9	6	6	11,0	**22630.0047**
16	**13**	3,5	8	12	8	8	17,0	**22630.0048**
	22	3,5	8	12	8	8	26,0	**22630.0049**
20	**15**	5,0	12	18	9	12	39,0	**22630.0050**
	25	5,0	12	18	9	12	55,0	**22630.0051**
25	**15**	5,0	12	18	9	12	49,0	**22630.0052**
	25	5,0	12	18	9	12	72,0	**22630.0053**

APPLICATION EXAMPLE

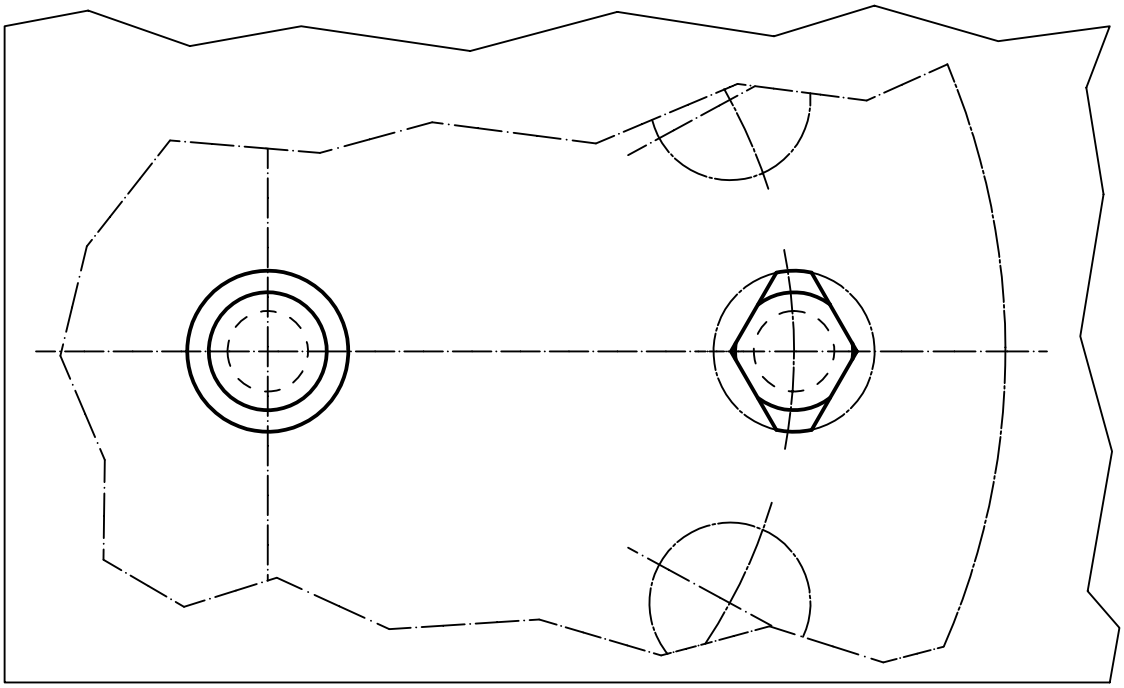

2

Seating Pins • partially DIN 6321 (old norm)

EH 22630.

PRODUCT DESCRIPTION

To be used as feet and bearings.
Load bearing surface without distortion.

Material

- Tool steel, hardened, ground

DRAWING

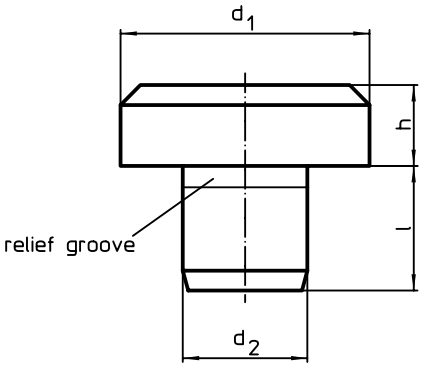

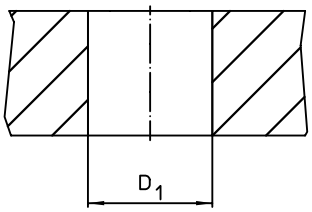

ORDER INFORMATION

d_1	Dimensions h h9 [mm]	d_2 n6 [mm]	l	Location hole D_1 H7 [mm]	[g]	Art. No.
DIN 6321 old norm						
6	**5,0**	4	6,0	4	1,8	22630.0001
10	**8,0**	6	8,0	6	6,5	22630.0002
16	**5,0**	8	10,0	8	11,0	22630.0003
	13,0	8	10,0	8	24,0	22630.0004
25	**8,0**	12	14,0	12	41,0	22630.0005
	20,0	12	14,0	12	88,0	22630.0006
40	**13,0**	20	20,0	20	171,0	22630.0007
	32,0	20	20,0	20	358,0	22630.0008
intermediate sizes						
6	**2,5**	4	6,5	4	1,2	22630.0110
	4,5	4	8,5	4	1,9	22630.0112
8	**4,0**	5	8,0	5	3,1	22630.0116
	7,0	5	8,0	5	4,2	22630.0118
10	**4,5**	6	8,5	6	4,4	22630.0120
12	**6,0**	6	10,0	6	7,6	22630.0124
	10,0	6	10,0	6	11,0	22630.0126
20	**6,0**	10	12,0	10	21,0	22630.0130
	12,0	10	12,0	10	36,0	22630.0132
25	**30,0**	12	14,0	12	125,0	22630.0135
30	**25,0**	16	20,0	16	164,0	22630.0137
	40,0	16	20,0	16	248,0	22630.0140
	50,0	16	20,0	16	305,0	22630.0144
	65,0	16	20,0	16	385,0	22630.0148
	80,0	20	20,0	20	485,0	22630.0152
	100,0	20	20,0	20	594,0	22630.0156

Locating Pins • with bore hole similar to DIN 6321

EH 22630.

PRODUCT DESCRIPTION

Cylindric locating pins for locating workpieces in toleranced holes and also to be used as stops and feet.
Flattened locating pins used to overcome differences in tolerances, between holes or to position an element in one direction only.
Apart from size 6 additional safety by fastening possibilities from up and down (can be used also for dismounting). The outer dimensions are similar to DIN 6321.

Material

- Case-hardened steel, case-hardened, blackened and ground

DRAWING

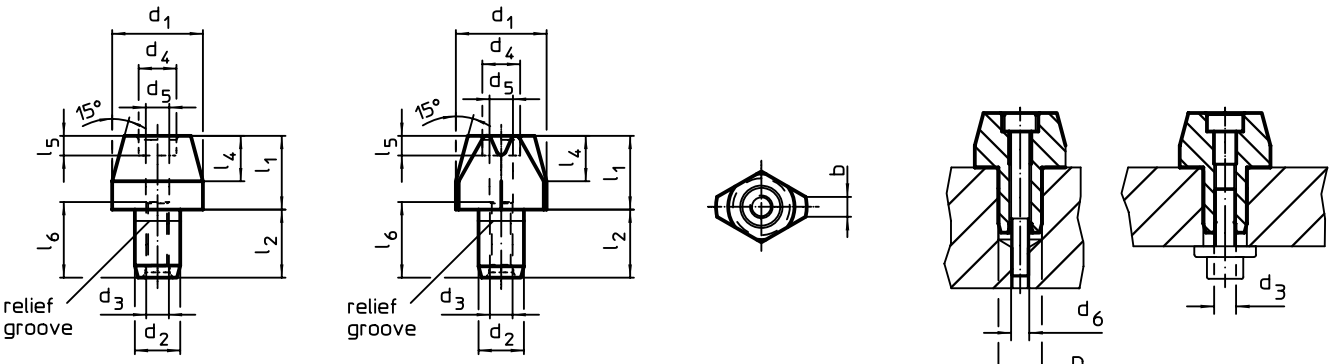

picture 1 picture 2

ORDER INFORMATION

Dimensions												Location hole		Art. No.
d_1 g6	l_1	b	d_2 k6	l_2	d_3	d_4	l_4	d_5	l_5	d_6	l_6	D_1 H7		
[mm]												[mm]	[g]	
locating pin, cylindric, with bore hole – picture 1														
6	**7**	–	4	6	–	–	4	2,1	–	M2	–	4	1,2	22630.0220[1]
	12	–	4	6	–	–	4	2,1	–	M2	–	4	2,9	22630.0221[1]
8	**10**	–	6	9	M3	–	6	2,6	–	M2,5	10	6	4,2	22630.0222
	16	–	6	9	M3	–	6	2,6	–	M2,5	10	6	6,4	22630.0223
10	**10**	–	6	9	M3	5,0	6	2,6	2,6	M2,5	10	6	6,1	22630.0224
	18	–	6	9	M3	5,0	6	2,6	2,6	M2,5	10	6	10,0	22630.0225
12	**10**	–	6	9	M3	5,0	6	2,6	2,6	M2,5	10	6	8,0	22630.0226
	18	–	6	9	M3	5,0	6	2,6	2,6	M2,5	10	6	15,0	22630.0227
16	**13**	–	8	12	M4	6,5	8	3,3	3,1	M3	13	8	19,0	22630.0228
	22	–	8	12	M4	6,5	8	3,3	3,1	M3	13	8	32,0	22630.0229
20	**15**	–	12	18	M6	10,0	9	5,2	5,1	M5	19	12	38,0	22630.0230
	25	–	12	18	M6	10,0	9	5,2	5,1	M5	19	12	60,0	22630.0231
25	**15**	–	12	18	M6	10,0	9	5,2	5,1	M5	19	12	58,0	22630.0232
	25	–	12	18	M6	10,0	9	5,2	5,1	M5	19	12	96,0	22630.0233

[1] can only be mounted from the top

→

Dimensions												Location hole		Art. No.
d_1 g6	l_1	b	d_2 k6	l_2	d_3	d_4	l_4	d_5	l_5	d_6	l_6	D_1 H7		
[mm]												[mm]	[g]	
locating pin, flattened, with bore hole – picture 2														
6	**7**	1,0	4	6	–	–	4	2,1	–	M2	–	4	1,0	22630.0240[1]
	12	1,0	4	6	–	–	4	2,1	–	M2	–	4	1,9	22630.0241[1]
8	**10**	1,6	6	9	M3	–	6	2,6	–	M2,5	10	6	3,4	22630.0242
	16	1,6	6	9	M3	–	6	2,6	–	M2,5	10	6	4,4	22630.0243
10	**10**	2,5	6	9	M3	5,0	6	2,6	2,6	M2,5	10	6	4,6	22630.0244
	18	2,5	6	9	M3	5,0	6	2,6	2,6	M2,5	10	6	7,3	22630.0245
12	**10**	2,5	6	9	M3	5,0	6	2,6	2,6	M2,5	10	6	6,1	22630.0246
	18	2,5	6	9	M3	5,0	6	2,6	2,6	M2,5	10	6	10,0	22630.0247
16	**13**	3,5	8	12	M4	6,5	8	3,3	3,1	M3	13	8	15,0	22630.0248
	22	3,5	8	12	M4	6,5	8	3,3	3,1	M3	13	8	22,0	22630.0249
20	**15**	5,0	12	18	M6	10,0	9	5,2	5,1	M5	19	12	30,0	22630.0250
	25	5,0	12	18	M6	10,0	9	5,2	5,1	M5	19	12	44,0	22630.0251
25	**15**	5,0	12	18	M6	10,0	9	5,2	5,1	M5	19	12	41,0	22630.0252
	25	5,0	12	18	M6	10,0	9	5,2	5,1	M5	19	12	62,0	22630.0253

[1] can only be mounted from the top

APPLICATION EXAMPLE

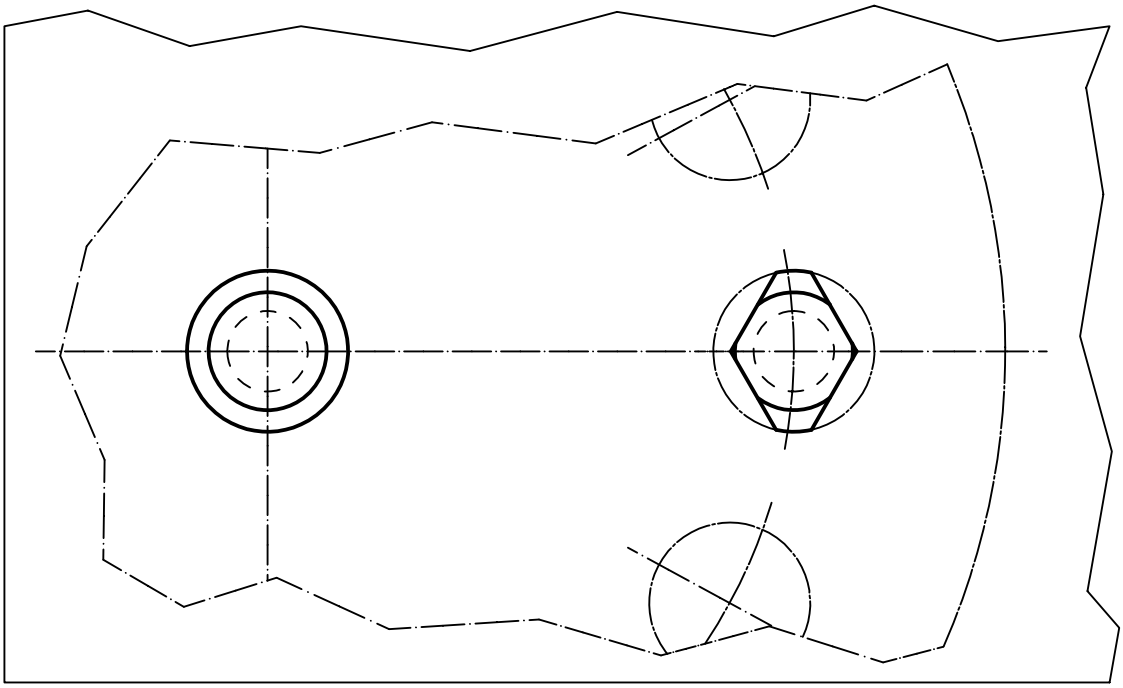

Locating Pins • with ball end

EH 22630.

PRODUCT DESCRIPTION

Ball ended locating pins facilitate easy inserting and removing avoiding clamping inclination.

Material

- Tool steel, hardened, blackened and ground
- Stainless steel 1.4305, ground, surface heat-treated

DRAWING

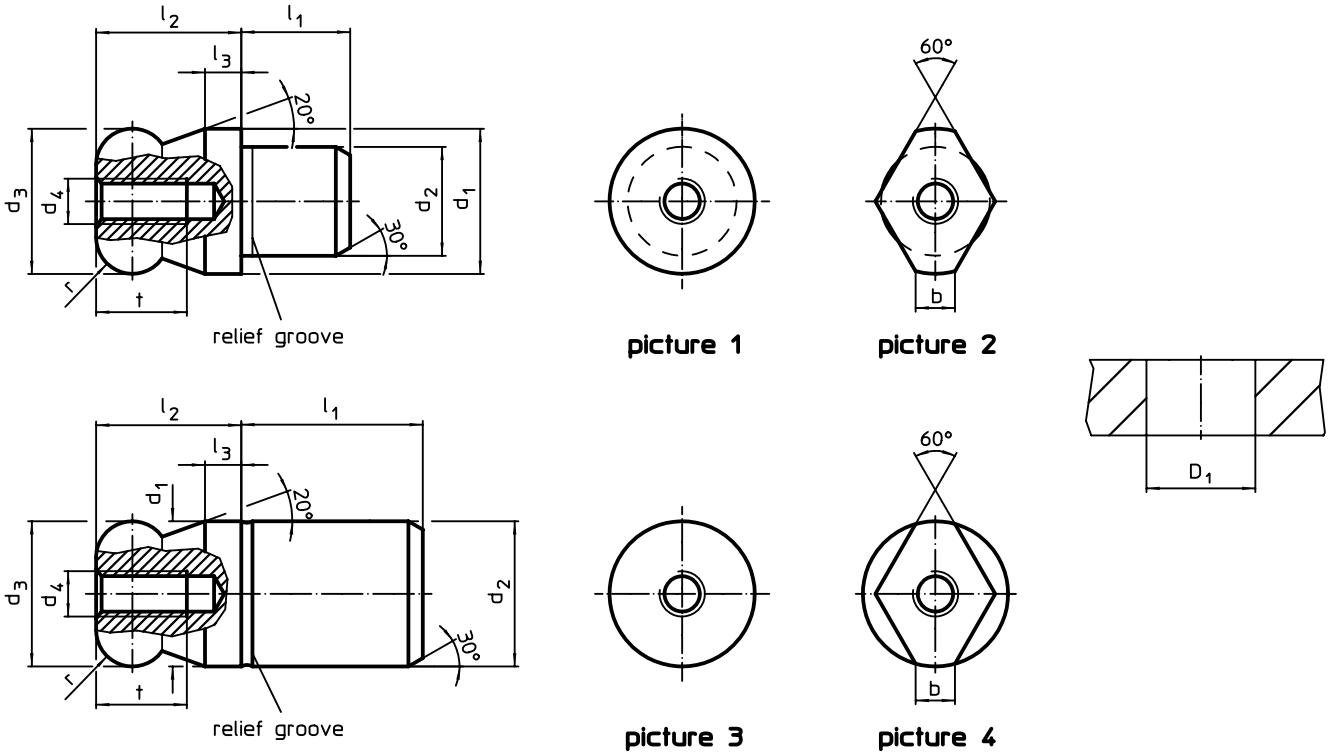

ORDER INFORMATION

Dimensions										Location hole		Art. No.	
d_1 g6	d_2 n6	d_3 -0,01 -0,05	d_4	l_1	l_2	l_3	t	r	b	D_1 H7		tool steel	stainless steel
[mm]										[mm]	[g]		
with ball end plain – picture 1													
10	**7**	10	M3	7	10	2,5	6	2,5	–	7	7	22630.0310	22630.0350
12	**8**	12	M4	8	12	3,0	8	3,0	–	8	11	22630.0312	22630.0352
16	**12**	16	M5	12	16	4,0	10	4,0	–	12	31	22630.0316	22630.0356
20	**14**	20	M5	14	20	5,0	10	5,0	–	14	58	22630.0320	22630.0360
22	**16**	22	M5	16	22	5,5	10	5,5	–	16	81	22630.0322	–
25	**18**	25	M5	18	25	6,0	10	6,0	–	18	118	22630.0325	–
with ball end flattened – picture 2													
10	**7**	10	M3	7	10	2,5	6	2,5	2,5	7	5	22630.0410	22630.0450
12	**8**	12	M4	8	12	3,0	8	3,0	2,5	8	8	22630.0412	22630.0452
16	**12**	16	M5	12	16	4,0	10	4,0	4,3	12	25	22630.0416	22630.0456
20	**14**	20	M5	14	20	5,0	10	5,0	5,0	14	46	22630.0420	22630.0460
22	**16**	22	M5	16	22	5,5	10	5,5	5,0	16	63	22630.0422	–
25	**18**	25	M5	18	25	6,0	10	6,0	5,6	18	92	22630.0425	–

→

2

Dimensions										Location hole		Art. No.	
d_1 g6	d_2 n6	d_3 -0,01 -0,05	d_4	l_1	l_2	l_3	t	r	b	D_1 H7		tool steel	stainless steel
[mm]										[mm]	[g]		
with ball end plain, not stepped – picture 3													
8	**8**	8	M3	10	8	2,0	6	2,0	–	8	6	22630.0508	22630.0568
10	**10**	10	M3	13	10	2,5	6	2,5	–	10	12	22630.0510	22630.0570
12	**12**	12	M4	15	12	3,0	8	3,0	–	12	21	22630.0512	22630.0572
16	**16**	16	M5	20	16	4,0	10	4,0	–	16	51	22630.0516	22630.0576
20	**20**	20	M5	25	20	5,0	10	5,0	–	20	101	22630.0520	22630.0580
25	**25**	25	M5	25	25	6,0	10	6,0	–	25	176	22630.0525	–
30	**30**	30	M6	30	30	8,0	12	8,0	–	30	307	22630.0530	–
40	**40**	40	M6	40	40	10,0	12	10,0	–	40	729	22630.0540	–
50	**50**	50	M6	50	50	12,0	12	12,0	–	50	1422	22630.0550	–
with ball end flattened, not stepped – picture 4													
8	**8**	8	M3	10	8	2,0	6	2,0	1,9	8	5	22630.0608	22630.0668
10	**10**	10	M3	13	10	2,5	6	2,5	2,5	10	11	22630.0610	22630.0670
12	**12**	12	M4	15	12	3,0	8	3,0	2,5	12	17	22630.0612	22630.0672
16	**16**	16	M5	20	16	4,0	10	4,0	4,3	16	44	22630.0616	22630.0676
20	**20**	20	M5	25	20	5,0	10	5,0	5,0	20	88	22630.0620	22630.0680
25	**25**	25	M5	25	25	6,0	10	6,0	5,6	25	149	22630.0625	–
30	**30**	30	M6	30	30	8,0	12	8,0	8,8	30	270	22630.0630	–
40	**40**	40	M6	40	40	10,0	12	10,0	12,8	40	657	22630.0640	–
50	**50**	50	M6	50	50	12,0	12	12,0	16,7	50	1243	22630.0650	–

APPLICATION EXAMPLE

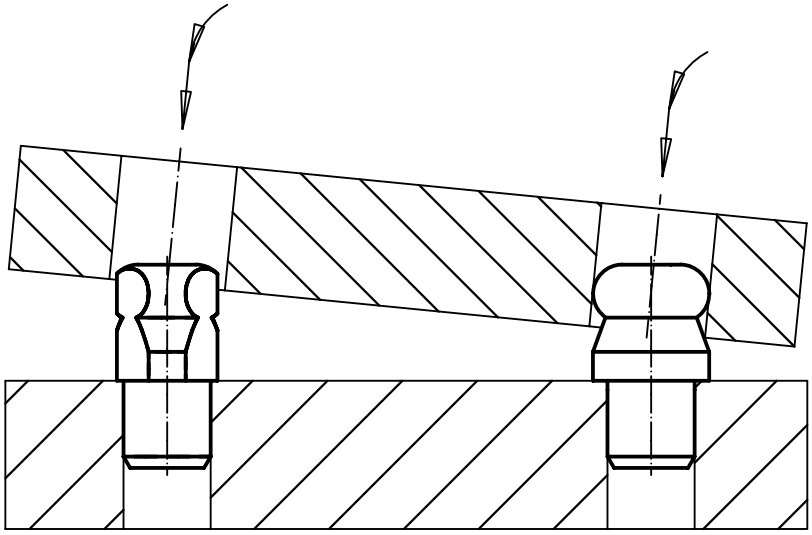

Feet • DIN 6320 with threaded shank

EH 22640.

PRODUCT DESCRIPTION

Feet can be used both as a foot and as a seating element and stop.
Load bearing surface without distortion.

Material

- Heat-treated steel, unhardened, blackened

DRAWING

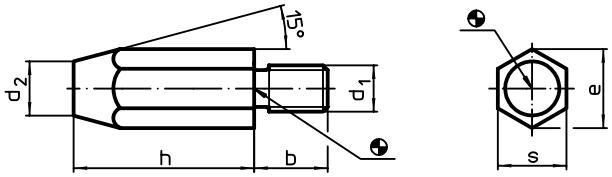

ORDER INFORMATION

Dimensions						Tightening torque max.		Art. No.
h	d_1	b	d_2	e	s			
[mm]						[Nm]	[g]	
10	**M 6**	11	8	11,5	10	7	8	22640.0061
20	**M 6**	11	6	11,5	10	7	13	22640.0062
15	**M 8**	13	10	15,0	13	7	19	22640.0081
30	**M 8**	13	9	15,0	13	18	35	22640.0082
20	**M10**	16	13	19,6	17	32	41	22640.0101
40	**M10**	16	13	19,6	17	32	81	22640.0102
25	**M12**	20	15	21,9	19	60	70	22640.0121
50	**M12**	20	15	21,9	19	60	129	22640.0122

APPLICATION EXAMPLE

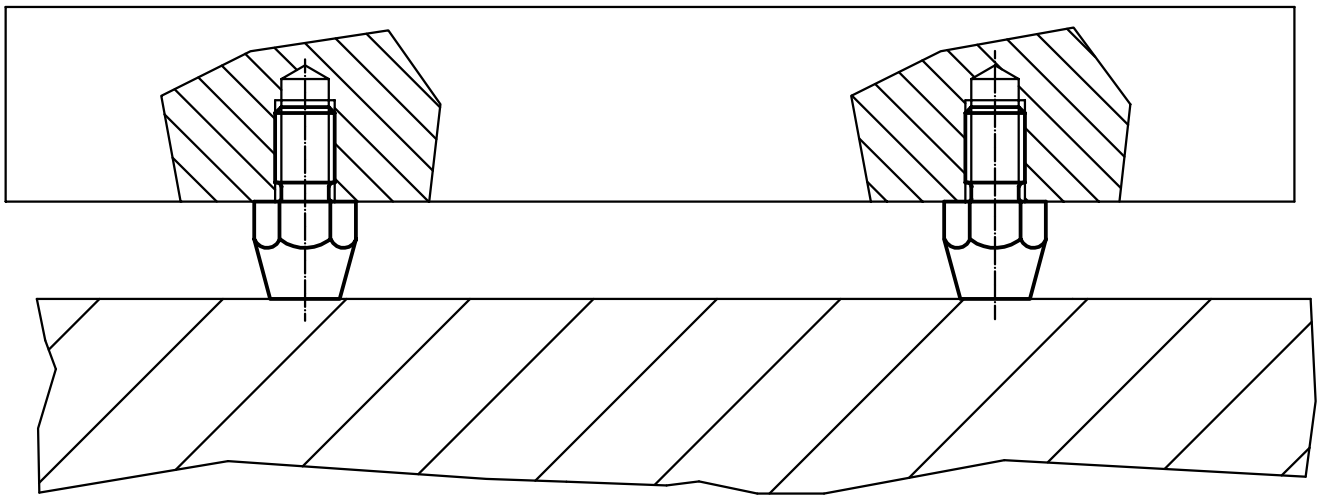

2

Seating Pins • ribbed or pointed

EH 22680.

PRODUCT DESCRIPTION

For workpieces showing a rough surface. Pointed type especially suitable for cast parts.

Material

Insert
- Hard metal, ribbed
- Hard metal, pointed

Body
- Heat-treated steel, tempered, blackened
- Free cutting steel, case-hardened, blackened

DRAWING

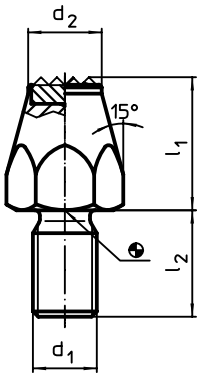

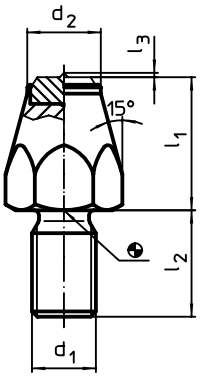

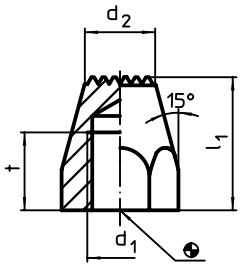

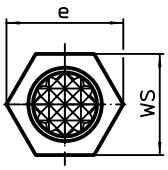

picture 1

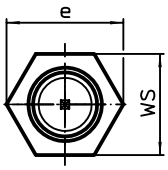

picture 2

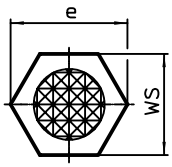

picture 3

ORDER INFORMATION

Dimensions l_1	d_1	l_2	l_3	t	d_2	e	WS [mm]	Tightening torque max. [Nm]	[g]	Art. No.
with hard metal insert, ribbed, and threaded shank – picture 1										
10	**M 6**	11	–	–	9,5	11,5	10	7	9	22680.0061
15	**M 8**	13	–	–	12,5	15,0	13	18	22	22680.0081
20	**M10**	15	–	–	12,5	19,6	17	32	40	22680.0101
25	**M12**	20	–	–	13,8	21,9	19	60	64	22680.0121
with hard metal insert, pointed, and threaded shank – picture 2										
10	**M 6**	11	0,8	–	9,5	11,5	10	7	9	22680.0063
15	**M 8**	13	0,8	–	12,5	15,0	13	18	23	22680.0083
20	**M10**	15	0,8	–	12,5	19,6	17	32	40	22680.0103
25	**M12**	20	0,8	–	13,8	21,9	19	60	65	22680.0123
case-hardened, ribbed, with female thread – picture 3										
20	**M 8**	–	–	10	9,0	15,0	13	18	14	22680.0142
25	**M 8**	–	–	10	9,0	15,0	13	18	20	22680.0144
	M10	–	–	13	12,5	19,6	17	32	31	22680.0164
30	**M10**	–	–	13	12,5	19,6	17	32	40	22680.0166
40	**M10**	–	–	13	12,5	19,6	17	32	60	22680.0168
25	**M12**	–	–	15	13,0	21,9	19	60	33	22680.0184
30	**M12**	–	–	15	13,0	21,9	19	60	44	22680.0186
40	**M12**	–	–	15	13,0	21,9	19	60	69	22680.0188

Seating Pins • pin shape

EH 22680.

PRODUCT DESCRIPTION

To be used as solid and precise seat and stop. The pin-shaped form of this locating pin allows an application in components with narrow seating points.
Surface induction hardened and ground.

Material

- Heat-treated steel, tempered, blackened

DRAWING

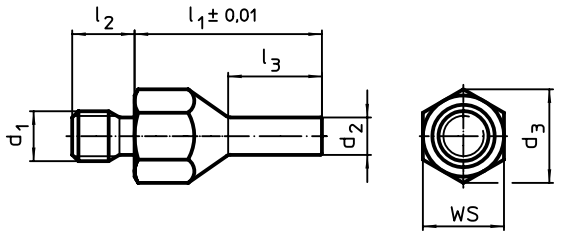

picture 1

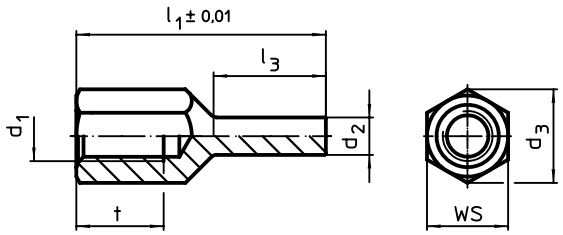

picture 2

ORDER INFORMATION

Dimensions							WS	Tightening torque max.		Art. No.
l_1 ±0,01	d_1	d_2	l_2	l_3	t	d_3				
[mm]							[mm]	[Nm]	[g]	
with male thread – picture 1										
20	**M 6**	**4**	8	10,0	–	11,0	10	7	8	**22680.0402**
30	**M 6**	**4**	8	15,0	–	11,0	10	7	12	**22680.0404**
	M 8	**4**	10	15,0	–	14,4	13	18	17	**22680.0412**
40	**M 8**	**4**	10	20,0	–	14,4	13	18	23	**22680.0414**
30	**M 8**	**6**	10	15,0	–	14,4	13	18	20	**22680.0416**
40	**M 8**	**6**	10	20,0	–	14,4	13	18	27	**22680.0418**
30	**M10**	**6**	14	15,0	–	19,0	17	32	30	**22680.0422**
50	**M10**	**6**	14	25,0	–	19,0	17	32	51	**22680.0424**
30	**M10**	**8**	14	15,0	–	19,0	17	32	35	**22680.0426**
50	**M10**	**8**	14	25,0	–	19,0	17	32	58	**22680.0428**
40	**M12**	**6**	14	20,0	–	21,2	19	60	48	**22680.0432**
60	**M12**	**6**	14	30,0	–	21,2	19	60	75	**22680.0434**
40	**M12**	**8**	14	20,0	–	21,2	19	60	56	**22680.0436**
60	**M12**	**8**	14	30,0	–	21,2	19	60	83	**22680.0438**
with female thread – picture 2										
20	**M 6**	**4**	–	8,5	6	11,0	10	7	6	**22680.0452**
30	**M 6**	**4**	–	13,5	9	11,0	10	7	9	**22680.0454**
	M 8	**4**	–	13,0	10	14,4	13	18	13	**22680.0462**
40	**M 8**	**4**	–	18,0	14	14,4	13	18	18	**22680.0464**
30	**M 8**	**6**	–	13,0	10	14,4	13	18	16	**22680.0466**
40	**M 8**	**6**	–	18,0	14	14,4	13	18	21	**22680.0468**
30	**M10**	**6**	–	12,0	10	19,0	17	32	24	**22680.0472**
50	**M10**	**6**	–	25,0	15	19,0	17	32	38	**22680.0474**
30	**M10**	**8**	–	12,0	10	19,0	17	32	28	**22680.0476**
50	**M10**	**8**	–	25,0	15	19,0	17	32	44	**22680.0478**
40	**M12**	**6**	–	18,0	12	21,2	19	60	36	**22680.0482**
60	**M12**	**6**	–	28,0	18	21,2	19	60	56	**22680.0484**
40	**M12**	**8**	–	18,0	12	21,2	19	60	41	**22680.0486**
60	**M12**	**8**	–	28,0	18	21,2	19	60	63	**22680.0488**

2

Pins

EH 22690.

PRODUCT DESCRIPTION

To be used as seats, stops and thrust pads.

Material

- Steel, case-hardened, blackened

DRAWING

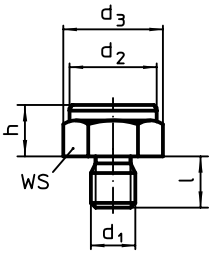

picture 1

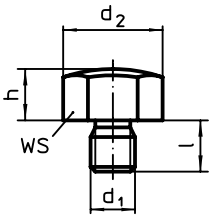

picture 2

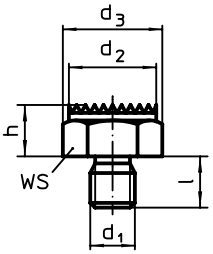

picture 3

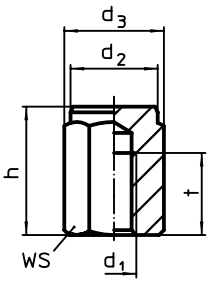

picture 4

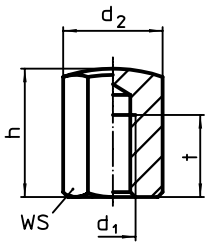

picture 5

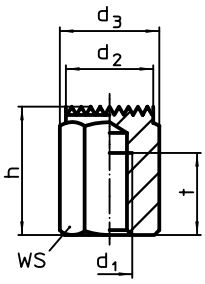

picture 6

ORDER INFORMATION

Dimensions						WS	Tightening torque max.		Art. No.
h	d_1	d_2	d_3	l	t				
[mm]						[mm]	[Nm]	[g]	
with male thread and plain surface – picture 1									
10 ±0,01	**M 8**	19,4	19,4	10	–	17	18	21	**22690.0021**
	M10	21,9	21,9	12	–	19	32	28	**22690.0031**
15 ±0,01	**M10**	21,9	21,9	12	–	19	32	40	**22690.0032**
10 ±0,01	**M12**	25,2	25,2	14	–	22	60	34	**22690.0001**
15 ±0,01	**M12**	25,2	25,2	14	–	22	60	56	**22690.0002**
	M16	33,0	33,0	19	–	30	140	110	**22690.0042**
20 ±0,01	**M16**	33,0	33,0	19	–	30	140	140	**22690.0043**
	M20	40,0	40,0	24	–	36	290	214	**22690.0052**
25 ±0,01	**M20**	40,0	40,0	24	–	36	290	257	**22690.0053**
20 ±0,01	**M24**	46,0	46,0	29	–	41	498	300	**22690.0062**
25 ±0,01	**M24**	46,0	46,0	29	–	41	498	356	**22690.0063**
30 ±0,01	**M24**	46,0	46,0	29	–	41	498	412	**22690.0064**

[1] The tightening torque of bolts with female thread is for threaded pins, quality 8. The bolt has to be tightened over the total thread length. →

Dimensions						WS	Tightening torque max.		Art. No.
h	d_1	d_2	d_3	l	t				
[mm]						[mm]	[Nm]	[g]	
with male thread and spherical surface – picture 2									
10 ±0,10	M 8	19,4	19,4	10	–	17	18	20	22690.0121
	M10	21,9	21,9	12	–	19	32	27	22690.0131
15 ±0,10	M10	21,9	21,9	12	–	19	32	40	22690.0132
10 ±0,10	M12	25,2	25,2	14	–	22	60	37	22690.0101
15 ±0,10	M12	25,2	25,2	14	–	22	60	53	22690.0102
	M16	33,0	33,0	19	–	30	140	105	22690.0142
20 ±0,10	M16	33,0	33,0	19	–	30	140	135	22690.0143
	M20	40,0	40,0	24	–	36	290	206	22690.0152
25 ±0,10	M20	40,0	40,0	24	–	36	290	249	22690.0153
20 ±0,10	M24	46,0	46,0	29	–	41	498	258	22690.0162
25 ±0,10	M24	46,0	46,0	29	–	41	498	342	22690.0163
30 ±0,10	M24	46,0	46,0	29	–	41	498	398	22690.0164
with male thread and ribbed surface – picture 3									
10 ±0,10	M 8	19,4	19,4	10	–	17	18	20	22690.0221
	M10	21,9	21,9	12	–	19	32	27	22690.0231
15 ±0,10	M10	21,9	21,9	12	–	19	32	39	22690.0232
10 ±0,10	M12	25,2	25,2	14	–	22	60	38	22690.0201
15 ±0,10	M12	25,2	25,2	14	–	22	60	54	22690.0202
	M16	33,0	33,0	19	–	30	140	106	22690.0242
20 ±0,10	M16	33,0	33,0	19	–	30	140	136	22690.0243
	M20	40,0	40,0	24	–	36	290	210	22690.0252
25 ±0,10	M20	40,0	40,0	24	–	36	290	253	22690.0253
20 ±0,10	M24	46,0	46,0	29	–	41	498	297	22690.0262
25 ±0,10	M24	46,0	46,0	29	–	41	498	353	22690.0263
30 ±0,10	M24	46,0	46,0	29	–	41	498	410	22690.0264
with female thread and plain surface tolerance l_1 = ±0,01 – picture 4									
15 ±0,01	M 8	19,4	19,4	15	6	17	25[1)]	25	22690.0321
25 ±0,01	M 8	19,4	19,4	25	12	17	25[1)]	42	22690.0323
20 ±0,01	M10	21,9	21,9	20	10	19	46[1)]	40	22690.0333
30 ±0,01	M10	21,9	21,9	30	15	19	46[1)]	61	22690.0335
40 ±0,01	M10	21,9	21,9	40	15	19	46[1)]	85	22690.0337
20 ±0,01	M12	25,2	25,2	20	10	22	82[1)]	52	22690.0301
25 ±0,01	M12	25,2	25,2	25	15	22	82[1)]	65	22690.0302
30 ±0,01	M12	25,2	25,2	30	18	22	82[1)]	79	22690.0303
40 ±0,01	M12	25,2	25,2	40	18	22	82[1)]	111	22690.0304
50 ±0,01	M12	25,2	25,2	50	18	22	82[1)]	142	22690.0305
30 ±0,01	M16	33,0	33,0	30	20	30	206[1)]	140	22690.0343
50 ±0,01	M16	33,0	33,0	50	24	30	206[1)]	257	22690.0345
40 ±0,01	M20	40,0	40,0	40	26	36	407[1)]	279	22690.0353
60 ±0,01	M20	40,0	40,0	60	38	36	407[1)]	431	22690.0355
40 ±0,01	M24	46,0	46,0	40	26	41	698[1)]	341	22690.0363
60 ±0,01	M24	46,0	46,0	60	38	41	698[1)]	530	22690.0365
with female thread and spherical surface – picture 5									
15 ±0,10	M 8	19,4	19,4	15	6	17	25[1)]	24	22690.0421
25 ±0,10	M 8	19,4	19,4	25	12	17	25[1)]	41	22690.0423
20 ±0,10	M10	21,9	21,9	20	10	19	46[1)]	38	22690.0433
30 ±0,10	M10	21,9	21,9	30	15	19	46[1)]	60	22690.0435
40 ±0,10	M10	21,9	21,9	40	15	19	46[1)]	84	22690.0437
20 ±0,10	M12	25,2	25,2	20	10	22	82[1)]	50	22690.0401
25 ±0,10	M12	25,2	25,2	25	15	22	82[1)]	62	22690.0402
30 ±0,10	M12	25,2	25,2	30	18	22	82[1)]	76	22690.0403
40 ±0,10	M12	25,2	25,2	40	18	22	82[1)]	109	22690.0404
50 ±0,10	M12	25,2	25,2	50	18	22	82[1)]	141	22690.0405
30 ±0,10	M16	33,0	33,0	30	20	30	206[1)]	136	22690.0443
50 ±0,10	M16	33,0	33,0	50	24	30	206[1)]	252	22690.0445
40 ±0,10	M20	40,0	40,0	40	26	36	407[1)]	272	22690.0453
60 ±0,10	M20	40,0	40,0	60	38	36	407[1)]	423	22690.0455
40 ±0,10	M24	46,0	46,0	40	26	41	698[1)]	340	22690.0463
60 ±0,10	M24	46,0	46,0	60	38	41	698[1)]	530	22690.0465

[1)] The tightening torque of bolts with female thread is for threaded pins, quality 8. The bolt has to be tightened over the total thread length.

→

2

Dimensions						WS	Tightening torque max.		Art. No.
h	d_1	d_2	d_3	l	t				
[mm]						[mm]	[Nm]	[g]	
with female thread and ribbed surface – picture 6									
15 ±0,10	**M 8**	19,4	19,4	15	6	17	25[1)]	24	**22690.0521**
25 ±0,10	**M 8**	19,4	19,4	25	12	17	25[1)]	41	**22690.0523**
20 ±0,10	**M10**	21,9	21,9	20	10	19	46[1)]	38	**22690.0533**
30 ±0,10	**M10**	21,9	21,9	30	15	19	46[1)]	60	**22690.0535**
40 ±0,10	**M10**	21,9	21,9	40	15	19	46[1)]	84	**22690.0537**
20 ±0,10	**M12**	25,2	25,2	20	10	22	82[1)]	50	**22690.0501**
25 ±0,10	**M12**	25,2	25,2	25	15	22	82[1)]	63	**22690.0502**
30 ±0,10	**M12**	25,2	25,2	30	18	22	82[1)]	77	**22690.0503**
40 ±0,10	**M12**	25,2	25,2	40	18	22	82[1)]	109	**22690.0504**
50 ±0,10	**M12**	25,2	25,2	50	18	22	82[1)]	141	**22690.0505**
30 ±0,10	**M16**	33,0	33,0	30	20	30	206[1)]	137	**22690.0543**
50 ±0,10	**M16**	33,0	33,0	50	24	30	206[1)]	254	**22690.0545**
40 ±0,10	**M20**	40,0	40,0	40	26	36	407[1)]	266	**22690.0553**
60 ±0,10	**M20**	40,0	40,0	60	38	36	407[1)]	418	**22690.0555**
40 ±0,10	**M24**	46,0	46,0	40	26	41	698[1)]	338	**22690.0563**
60 ±0,10	**M24**	46,0	46,0	60	38	41	698[1)]	528	**22690.0565**

[1)] The tightening torque of bolts with female thread is for threaded pins, quality 8. The bolt has to be tightened over the total thread length.

APPLICATION EXAMPLE

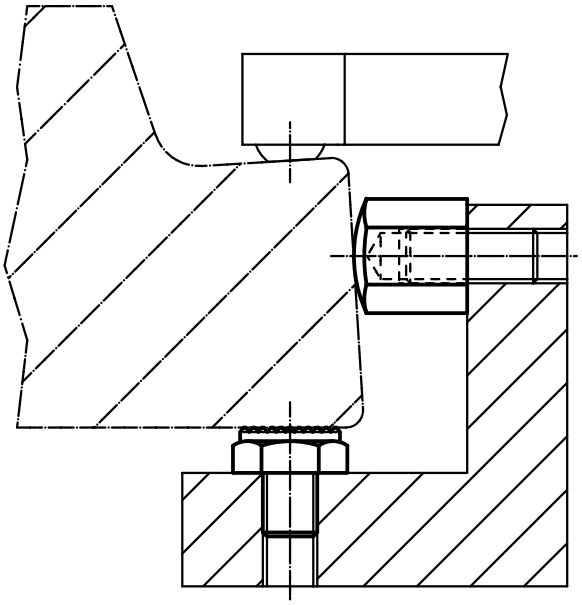

Seating Pins • adjustable

EH 22690.

PRODUCT DESCRIPTION

The adjustable seating pins can be used as seats and stops.

Material

Seating pins

- Heat-treated steel, tempered, quality 10.9, blackened / surface induction hardened

Nut

- Heat-treated steel, tempered, quality 8.8 (ISO 4035), blackened

DRAWING

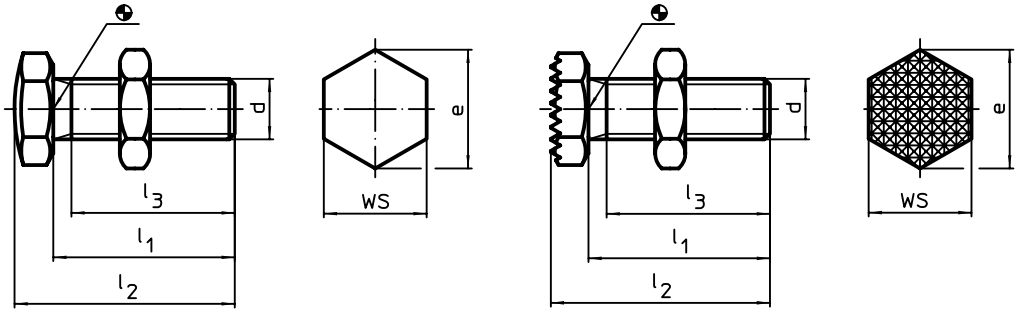

picture 1 picture 2

ORDER INFORMATION

d	Dimensions l_1 ±1,5	l_2 ±1,5	l_3 min.	e	WS [mm]	[g]	Art. No.
		[mm]					
spherical surface – picture 1							
M 6	**20**	23,5	19,0	11,5	10	6,8	**22690.0606**
M 8	**25**	30,0	21,0	14,5	13	15,0	**22690.0608**
M10	**30**	36,0	25,5	19,6	17	31,0	**22690.0610**
M12	**35**	42,0	29,7	21,9	19	47,0	**22690.0612**
M16	**40**	49,5	34,0	27,7	24	99,0	**22690.0616**
M20	**45**	57,0	37,0	34,6	30	179,0	**22690.0620**
M24	**50**	64,0	40,0	41,6	36	294,0	**22690.0624**
ribbed surface – picture 2							
M 6	**20**	23,5	19,0	11,5	10	6,7	**22690.0626**
M 8	**25**	30,0	21,0	14,5	13	15,0	**22690.0628**
M10	**30**	36,0	25,5	19,6	17	32,0	**22690.0630**
M12	**35**	42,0	29,7	21,9	19	49,0	**22690.0632**
M16	**40**	49,5	34,0	27,7	24	100,0	**22690.0636**
M20	**45**	57,0	37,0	34,6	30	177,0	**22690.0640**
M24	**50**	64,0	40,0	41,6	36	296,0	**22690.0644**

2

Pins • with plastic contact surface

EH 22691.

PRODUCT DESCRIPTION

Pins with plastic contact surface can be used as protective supports, stops, and thrust pads. This protects high-quality surfaces from damage.

Material

Insert
- Plastic (PEEK), blue

Threaded bushing
- Stainless steel

Threaded pin
- Stainless steel

Body
- Plastic (PEEK), blue
- Stainless steel 1.4305

DRAWING

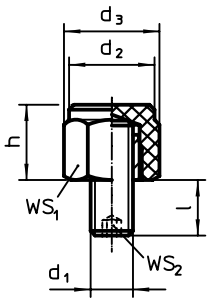

picture 1

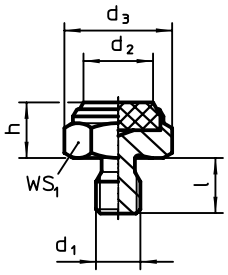

picture 2

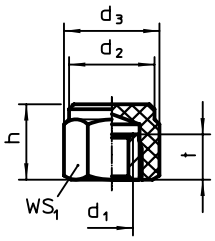

picture 3

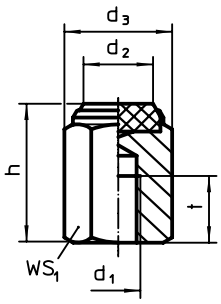

picture 4

ORDER INFORMATION

Dimensions h ±0,1 [mm]	d_1	d_2	d_3	l	t	WS_1 [mm]	WS_2 [mm]	Load capacity for static load max. [kN]	Tightening torque max. [Nm]	min. [°C]	max. [°C]	[g]	Art. No.
with male thread, body made of plastic (PEEK), plain surface – picture 1													
15	**M 8**	17,0	19,0	8 ±1	–	17	4	2,1	10	-60	250	12	**22691.0122**
20	**M10**	19,0	21,5	10 ±1	–	19	5	2,4	10	-60	250	18	**22691.0133**
	M12	22,0	25,0	14 ±1	–	22	6	3,4	10	-60	250	24	**22691.0143**
with male thread, plastic insert, plain surface – picture 2													
10	**M 8**	12,5	19,4	10	–	17	–	2,8	18	-60	250	15	**22691.0021**
	M10	14,5	21,9	12	–	19	–	3,8	32	-60	250	21	**22691.0031**
15	**M10**	14,5	21,9	12	–	19	–	3,8	32	-60	250	33	**22691.0032**
10	**M12**	17,5	25,2	14	–	22	–	5,5	60	-60	250	30	**22691.0041**
15	**M12**	17,5	25,2	14	–	22	–	5,5	60	-60	250	46	**22691.0042**

[1] The tightening torque of bolts with female thread is for threaded pins, quality 8. The bolt has to be tightened over the total thread length. →

Dimensions						WS$_1$	WS$_2$	Load capacity for static load max.	Tightening torque max.				Art. No.
h ±0,1	d$_1$	d$_2$	d$_3$	l	t					min.	max.		
[mm]						[mm]	[mm]	[kN]	[Nm]	[°C]		[g]	
with female thread, body made of plastic (PEEK), plain surface – picture 3													
15	**M 8**	17,0	19,0	–	9	–	–	2,1	10	-60	250	7	**22691.0222**
20	**M10**	19,0	21,5	–	10	–	–	2,4	10	-60	250	11	**22691.0233**
	M12	22,0	25,0	–	12	–	–	3,4	10	-60	250	16	**22691.0243**
with female thread, plastic insert (PEEK), plain surface – picture 4													
25	**M 8**	12,5	19,4	–	12	17	–	2,8	18[1)]	-60	250	36	**22691.0324**
30	**M10**	14,5	21,9	–	15	19	–	3,8	32[1)]	-60	250	54	**22691.0335**
	M12	17,5	25,2	–	18	22	–	5,5	60[1)]	-60	250	71	**22691.0345**

[1)] The tightening torque of bolts with female thread is for threaded pins, quality 8. The bolt has to be tightened over the total thread length.

APPLICATION EXAMPLE

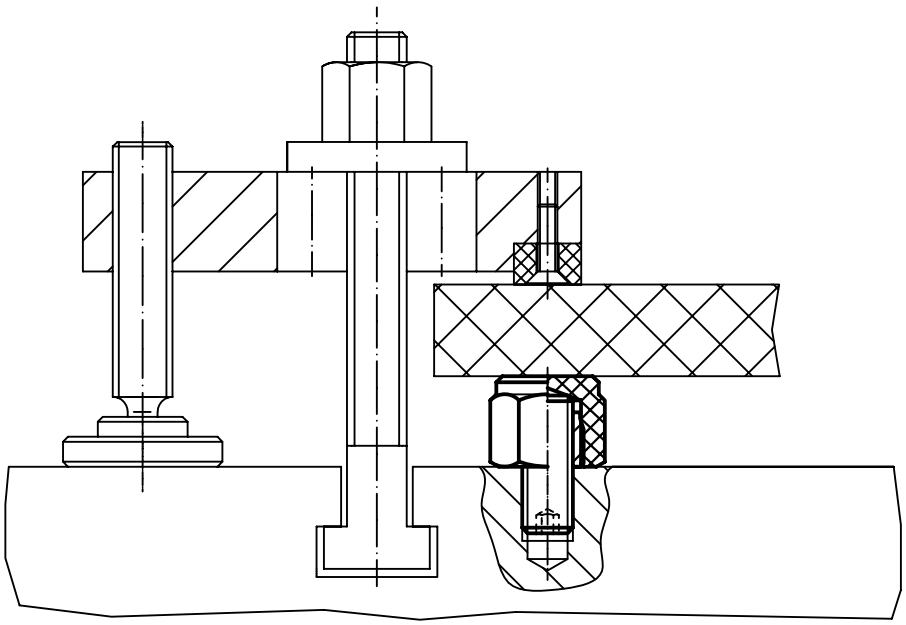

2

BALL-ENDED THRUST SCREWS FOR CLAMPING NON-PARALLEL SURFACES

MAKE THE SLANT BALL ITS EYES OUT

Whether sporting a fine-pitch thread for pin-point adjustments or a regular thread – they are the preferred tool for fastening, clamping, positioning or supporting non-parallel surfaces.

A particular highlight of these ball-ended thrust screws is their internal hexagon drive. It provides for optimum force transmission by channelling the driving forces through surfaces rather than edges (contrary to, for instance, an internal hexagon). This optimised force transmission keeps tool wear at a minimum, extending the service life of the tool. This reduces tool wear and increases tool service life.

Ball-Ended Thrust Screws • headed, ball protected against rotating

EH 22700.

PRODUCT DESCRIPTION

For clamping and supporting of surfaces that are not exactly parallel.
Maximised load transmission due to moveable ball.

Material

Ball
- Ball-bearing steel, hardened
- Stainless steel, hardened

Screw
- Heat-treated steel, 1200 ±100 N/mm²
- Stainless steel 1.4305

MORE INFORMATION

Notes

Note: Thread runout l_4 !

Ball protected against rotating.
Special types on request.

References

Thread lock on request, please refer to appendix - Technical Data -

Further products

Ball-Ended Thrust Screws, headed, flat-faced ball . . . . . → p. 300

DRAWING

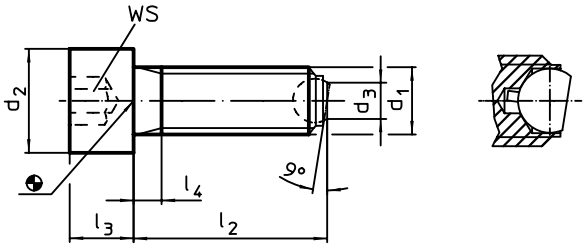

ORDER INFORMATION

Dimensions							WS	Load capacity for static load[1] max.		Art. No.	
d_1	l_2	d_2	d_3	l_3	l_4	Ball				heat-treated steel	stainless steel
			[mm]				[mm]	[kN]	[g]		
flat-faced ball, plain surface											
M 6	**20**	10	3,2	6	3,0	4,0	5	6	6,1	22700.0062	22700.0302
	30	10	3,2	6	3,0	4,0	5	6	7,7	22700.0064	22700.0304
	40	10	3,2	6	16,0	4,0	5	6	10,0	22700.0066	22700.0306
M 8	**20**	13	4,5	8	3,5	5,5	6	9	13,0	22700.0082	22700.0312
	35	13	4,5	8	3,5	5,5	6	9	17,0	22700.0084	22700.0314
	50	13	4,5	8	22,0	5,5	6	9	23,0	22700.0086	22700.0316
M10	**25**	16	6,0	10	4,5	7,0	8	12	24,0	22700.0102	22700.0322
	40	16	6,0	10	4,5	7,0	8	12	31,0	22700.0104	22700.0324
	60	16	6,0	10	28,0	7,0	8	12	44,0	22700.0106	22700.0326
M12	**30**	18	7,2	12	5,0	8,5	10	18	38,0	22700.0122	22700.0332
	50	18	7,2	12	5,0	8,5	10	18	52,0	22700.0124	22700.0334
	80	18	7,2	12	44,0	8,5	10	18	80,0	22700.0126	22700.0336
M16	**40**	24	10,7	16	6,0	12,0	14	36	92,0	22700.0162	22700.0342
	60	24	10,7	16	6,0	12,0	14	36	118,0	22700.0164	22700.0344
	80	24	10,7	16	36,0	12,0	14	36	153,0	22700.0166	22700.0346
M20	**50**	30	13,5	20	7,5	15,0	17	60	181,0	22700.0172	–
	80	30	13,5	20	28,0	15,0	17	60	255,0	22700.0174	–
	100	30	13,5	20	48,0	15,0	17	60	304,0	22700.0176	–
M24	**60**	36	15,8	24	9,0	18,0	19	80	325,0	22700.0182	–
	90	36	15,8	24	30,0	18,0	19	80	430,0	22700.0184	–
	120	36	15,8	24	60,0	18,0	19	80	535,0	22700.0186	–

[1] Statements on load capacity are not valid for the stainless steel type. →

2

Dimensions							WS	Load capacity for static load[1] max.		Art. No.	
d_1	l_2	d_2	d_3	l_3	l_4	Ball				heat-treated steel	stainless steel
[mm]							[mm]	[kN]	[g]		
flat-faced ball, ribbed surface											
M 8	**20**	13	4,5	8	3,5	5,5	6	9	13,0	22700.0192	–
	35	13	4,5	8	3,5	5,5	6	9	17,0	22700.0194	–
	50	13	4,5	8	22,0	5,5	6	9	23,0	22700.0196	–
M10	**25**	16	6,0	10	4,5	7,0	8	12	24,0	22700.0202	–
	40	16	6,0	10	4,5	7,0	8	12	31,0	22700.0204	–
	60	16	6,0	10	28,0	7,0	8	12	43,0	22700.0206	–
M12	**30**	18	7,2	12	5,0	8,5	10	18	39,0	22700.0222	–
	50	18	7,2	12	5,0	8,5	10	18	52,0	22700.0224	–
	80	18	7,2	12	44,0	8,5	10	18	80,0	22700.0226	–
M16	**40**	24	10,7	16	6,0	12,0	14	36	94,0	22700.0262	–
	60	24	10,7	16	6,0	12,0	14	36	119,0	22700.0264	–
	80	24	10,7	16	36,0	12,0	14	36	154,0	22700.0266	–
M20	**50**	30	13,5	20	7,5	15,0	17	60	181,0	22700.0272	–
	80	30	13,5	20	28,0	15,0	17	60	251,0	22700.0274	–
	100	30	13,5	20	48,0	15,0	17	60	298,0	22700.0276	–
M24	**60**	36	15,8	24	9,0	18,0	19	80	325,0	22700.0282	–
	90	36	15,8	24	30,0	18,0	19	80	427,0	22700.0284	–
	120	36	15,8	24	60,0	18,0	19	80	535,0	22700.0286	–

[1] Statements on load capacity are not valid for the stainless steel type.

APPLICATION EXAMPLE

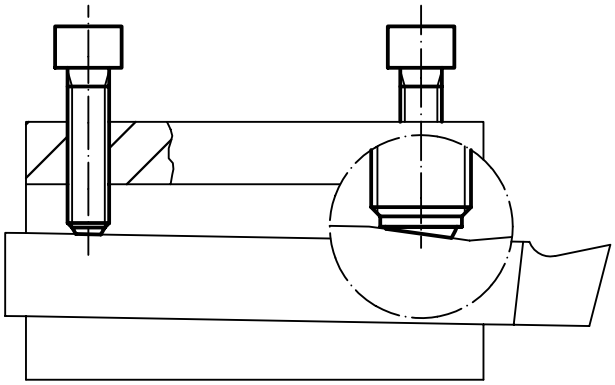

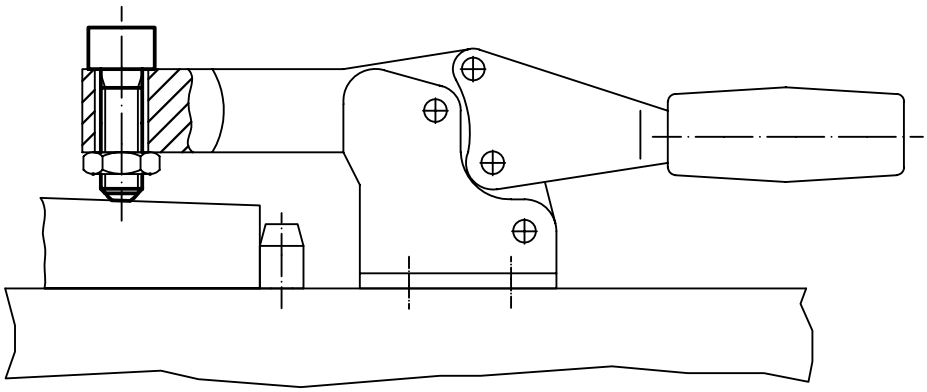

Ball-Ended Thrust Screws • headless, ball protected against rotating

EH 22700.

PRODUCT DESCRIPTION

For clamping and supporting of surfaces that are not exactly parallel.
Maximised load transmission due to moveable ball.

Material

Ball
- Ball-bearing steel, hardened
- Stainless steel, hardened

Screw
- Heat-treated steel, 1200 ±100 N/mm²
- Stainless steel 1.4305

MORE INFORMATION

Notes

Ball protected against rotating.
Special types on request.

References

Thread lock on request, please refer to appendix - Technical Data -

Further products

Ball-Ended Thrust Screws, headless, flat-faced ball . . . . . → p. 304
Ball-Ended Thrust Screws, headless, with fine-pitch thread . . . . . → p. 307
Ball-Ended Thrust Screws, headless, flat-faced ball and hexalobular socket . → p. 310

DRAWING

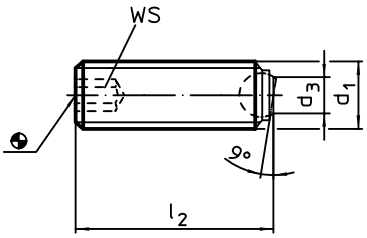

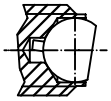

ORDER INFORMATION

Dimensions d_1	l_2	d_3	Ball	WS	Load capacity for static load[1] max.		Art. No. heat-treated steel	Art. No. stainless steel
[mm]				[mm]	[kN]	[g]		
flat-faced ball, plain surface								
M 6	12	3,2	4,0	3	6	1,6	22700.0563	22700.0803
	16	3,2	4,0	3	6	2,3	22700.0564	22700.0804
	20	3,2	4,0	3	6	2,9	22700.0565	22700.0805
	25	3,2	4,0	3	6	3,8	22700.0566	22700.0806
M 8	16	4,5	5,5	4	9	3,7	22700.0583	22700.0813
	20	4,5	5,5	4	9	5,1	22700.0584	22700.0814
	25	4,5	5,5	4	9	6,5	22700.0585	22700.0815
	30	4,5	5,5	4	9	8,1	22700.0586	22700.0816
M10	20	6,0	7,0	5	12	7,6	22700.0603	22700.0823
	25	6,0	7,0	5	12	10,0	22700.0604	22700.0824
	35	6,0	7,0	5	12	15,0	22700.0606	22700.0826
	40	6,0	7,0	5	12	17,0	22700.0608	22700.0828
M12	20	7,2	8,5	6	18	11,0	22700.0622	22700.0832
	30	7,2	8,5	6	18	18,0	22700.0624	22700.0834
	40	7,2	8,5	6	18	24,0	22700.0626	22700.0836
	50	7,2	8,5	6	18	32,0	22700.0628	22700.0838
M16	20	10,7	12,0	8	36	22,0	22700.0661	22700.0841
	25	10,7	12,0	8	36	28,0	22700.0662	22700.0842
	35	10,7	12,0	8	36	38,0	22700.0664	22700.0844
	50	10,7	12,0	8	36	60,0	22700.0666	22700.0846
M20	30	13,5	15,0	10	60	52,0	22700.0672	–
	40	13,5	15,0	10	60	70,0	22700.0674	–
	50	13,5	15,0	10	60	90,0	22700.0675	–
	60	13,5	15,0	10	60	111,0	22700.0676	–
M24	35	15,8	18,0	12	80	86,0	22700.0682	–
	50	15,8	18,0	12	80	125,0	22700.0684	–
	80	15,8	18,0	12	80	216,0	22700.0686	–

[1] Statements on load capacity are not valid for the stainless steel type. →

Dimensions				WS	Load capacity for static load[1] max.		Art. No.	
d_1	l_2	d_3	Ball				heat-treated steel	stainless steel
[mm]				[mm]	[kN]	[g]		
flat-faced ball, ribbed surface								
M 8	**16**	4,5	5,5	4	9	3,7	22700.0693	–
	20	4,5	5,5	4	9	4,9	22700.0694	–
	25	4,5	5,5	4	9	6,6	22700.0695	–
	30	4,5	5,5	4	9	8,0	22700.0696	–
M10	**20**	6,0	7,0	5	12	7,5	22700.0703	–
	25	6,0	7,0	5	12	9,9	22700.0704	–
	35	6,0	7,0	5	12	15,0	22700.0706	–
	40	6,0	7,0	5	12	17,0	22700.0708	–
M12	**20**	7,2	8,5	6	18	11,0	22700.0722	–
	30	7,2	8,5	6	18	18,0	22700.0724	–
	40	7,2	8,5	6	18	24,0	22700.0726	–
	50	7,2	8,5	6	18	32,0	22700.0728	–
M16	**20**	10,7	12,0	8	36	22,0	22700.0761	–
	25	10,7	12,0	8	36	27,0	22700.0762	–
	35	10,7	12,0	8	36	38,0	22700.0764	–
	50	10,7	12,0	8	36	60,0	22700.0766	–
M20	**30**	13,5	15,0	10	60	51,0	22700.0772	–
	40	13,5	15,0	10	60	69,0	22700.0774	–
	50	13,5	15,0	10	60	90,0	22700.0775	–
	60	13,5	15,0	10	60	110,0	22700.0776	–
M24	**35**	15,8	18,0	12	80	84,0	22700.0782	–
	50	15,8	18,0	12	80	128,0	22700.0784	–
	80	15,8	18,0	12	80	215,0	22700.0786	–

[1] Statements on load capacity are not valid for the stainless steel type.

APPLICATION EXAMPLE

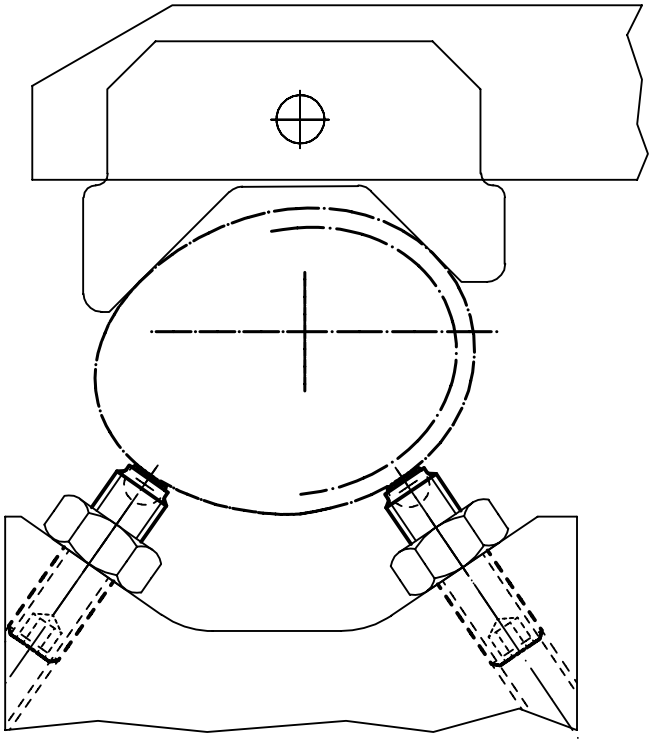

Ball-Ended Thrust Screws • headed, round ball

EH 22710.

PRODUCT DESCRIPTION

Also for positioning, clamping, tightening or supporting of surfaces that are not exactly parallel.

Material

Ball
- Ball-bearing steel, hardened
- Stainless steel, hardened

Screw
- Heat-treated steel, 1200 ±100 N/mm²
- Stainless steel 1.4305

MORE INFORMATION

Notes

Special types on request.

References

Thread lock on request, please refer to appendix - Technical Data -

DRAWING

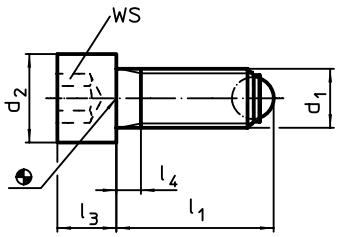

ORDER INFORMATION

Dimensions						WS	Load capacity for static load[1] max.		Art. No.	
d_1	l_1	d_2	l_3	l_4	Ball				heat-treated steel	stainless steel
[mm]						[mm]	[kN]	[g]		
round ball										
M 6	**20,8**	10	6	3,0	4,0	5	9	6,2	22710.0062	22710.0752
	30,8	10	6	3,0	4,0	5	9	8,0	22710.0064	22710.0754
	40,8	10	6	16,0	4,0	5	9	10,0	22710.0066	22710.0756
M 8	**21,2**	13	8	3,5	5,5	6	15	13,0	22710.0082	22710.0762
	36,2	13	8	3,5	5,5	6	15	17,0	22710.0084	22710.0764
	51,2	13	8	22,0	5,5	6	15	24,0	22710.0086	22710.0766
M10	**26,7**	16	10	4,5	7,0	8	20	24,0	22710.0102	22710.0772
	41,7	16	10	4,5	7,0	8	20	31,0	22710.0104	22710.0774
	61,7	16	10	28,0	7,0	8	20	44,0	22710.0106	22710.0776
M12	**32,0**	18	12	5,0	8,5	10	30	38,0	22710.0122	22710.0782
	52,0	18	12	5,0	8,5	10	30	52,0	22710.0124	22710.0784
	82,0	18	12	44,0	8,5	10	30	79,0	22710.0126	22710.0786
M16	**43,3**	24	16	6,0	12,0	14	60	94,0	22710.0162	22710.0792
	63,3	24	16	6,0	12,0	14	60	119,0	22710.0164	22710.0794
	83,3	24	16	36,0	12,0	14	60	156,0	22710.0166	22710.0796
M20	**54,2**	30	20	7,5	15,0	17	90	183,0	22710.0202	–
	84,2	30	20	28,0	15,0	17	90	254,0	22710.0204	–
	104,2	30	20	48,0	15,0	17	90	307,0	22710.0206	–
M24	**64,7**	36	24	9,0	18,0	19	120	331,0	22710.0242	–
	94,7	36	24	30,0	18,0	19	120	430,0	22710.0244	–
	124,7	36	24	60,0	18,0	19	120	537,0	22710.0246	–

[1] Statements on load capacity are not valid for the stainless steel type.

2

Ball-Ended Thrust Screws • headed, flat-faced ball

EH 22710.

PRODUCT DESCRIPTION

For clamping and supporting of surfaces that are not exactly parallel.
Maximised load transmission due to moveable ball.

Material

Ball
- Ball-bearing steel, hardened
- Stainless steel, hardened

Screw
- Heat-treated steel, 1200 ±100 N/mm²
- Stainless steel 1.4305

Special types on request.

References

Thread lock on request, please refer to appendix - Technical Data -

Further products

Ball-Ended Thrust Screws, headed, ball protected against rotating . . . . . → p. 295

MORE INFORMATION

Notes

Fully rotating ball.

DRAWING

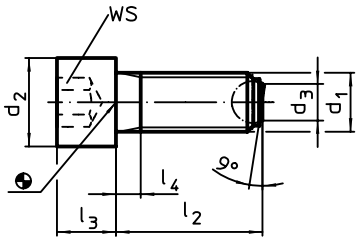

ORDER INFORMATION

d_1	l_2	d_2	d_3	l_3	l_4	Ball	WS	Load capacity for static load[1] max.		Art. No. heat-treated steel	Art. No. stainless steel
Dimensions [mm]							[mm]	[kN]	[g]		
plain surface											
M 6	**20**	10	3,2	6	3,0	4,0	5	9	6,1	22710.0562	22710.0832
	30	10	3,2	6	3,0	4,0	5	9	7,6	22710.0564	22710.0834
	40	10	3,2	6	16,0	4,0	5	9	10,0	22710.0566	22710.0836
M 8	**20**	13	4,5	8	3,5	5,5	6	15	13,0	22710.0582	22710.0842
	35	13	4,5	8	3,5	5,5	6	15	17,0	22710.0584	22710.0844
	50	13	4,5	8	22,0	5,5	6	15	23,0	22710.0586	22710.0846
M10	**25**	16	6,0	10	4,5	7,0	8	20	24,0	22710.0602	22710.0852
	40	16	6,0	10	4,5	7,0	8	20	31,0	22710.0604	22710.0854
	60	16	6,0	10	28,0	7,0	8	20	44,0	22710.0606	22710.0856
M12	**30**	18	7,2	12	5,0	8,5	10	30	38,0	22710.0622	22710.0862
	50	18	7,2	12	5,0	8,5	10	30	52,0	22710.0624	22710.0864
	80	18	7,2	12	44,0	8,5	10	30	79,0	22710.0626	22710.0866
M16	**40**	24	10,7	16	6,0	12,0	14	60	92,0	22710.0662	22710.0872
	60	24	10,7	16	6,0	12,0	14	60	120,0	22710.0664	22710.0874
	80	24	10,7	16	36,0	12,0	14	60	155,0	22710.0666	22710.0876
M20	**50**	30	13,5	20	7,5	15,0	17	90	182,0	22710.0702	–
	80	30	13,5	20	28,0	15,0	17	90	255,0	22710.0704	–
	100	30	13,5	20	48,0	15,0	17	90	305,0	22710.0706	–
M24	**60**	36	15,8	24	9,0	18,0	19	120	325,0	22710.0742	–
	90	36	15,8	24	30,0	18,0	19	120	422,0	22710.0744	–
	120	36	15,8	24	60,0	18,0	19	120	534,0	22710.0746	–

[1] Statements on load capacity are not valid for the stainless steel type. →

Dimensions							WS	Load capacity for static load[1] max.		Art. No.	
d_1	l_2	d_2	d_3	l_3	l_4	Ball				heat-treated steel	stainless steel
[mm]							[mm]	[kN]	[g]		
ribbed surface											
M 8	**20**	13	4,5	8	3,5	5,5	6	15	12,0	22710.0892	–
	35	13	4,5	8	3,5	5,5	6	15	17,0	22710.0894	–
	50	13	4,5	8	22,0	5,5	6	15	23,0	22710.0896	–
M10	**25**	16	6,0	10	4,5	7,0	8	20	24,0	22710.0902	–
	40	16	6,0	10	4,5	7,0	8	20	31,0	22710.0904	–
	60	16	6,0	10	28,0	7,0	8	20	44,0	22710.0906	–
M12	**30**	18	7,2	12	5,0	8,5	10	30	39,0	22710.0922	–
	50	18	7,2	12	5,0	8,5	10	30	53,0	22710.0924	–
	80	18	7,2	12	44,0	8,5	10	30	79,0	22710.0926	–
M16	**40**	24	10,7	16	6,0	12,0	14	60	92,0	22710.0962	–
	60	24	10,7	16	6,0	12,0	14	60	118,0	22710.0964	–
	80	24	10,7	16	36,0	12,0	14	60	155,0	22710.0966	–
M20	**50**	30	13,5	20	7,5	15,0	17	90	180,0	22710.0972	–
	80	30	13,5	20	28,0	15,0	17	90	254,0	22710.0974	–
	100	30	13,5	20	48,0	15,0	17	90	303,0	22710.0976	–
M24	**60**	36	15,8	24	9,0	18,0	19	120	324,0	22710.0982	–
	90	36	15,8	24	30,0	18,0	19	120	427,0	22710.0984	–
	120	36	15,8	24	60,0	18,0	19	120	536,0	22710.0986	–

[1] Statements on load capacity are not valid for the stainless steel type.

2

Ball-Ended Thrust Screws • headless, round ball

EH 22720.

PRODUCT DESCRIPTION

Ball-ended thrust screws with thermoplastic ball are used for pressure sensitive pieces. Also for positioning, clamping, tightening or supporting of surfaces that are not exactly parallel.

Material

Ball
- Ball-bearing steel, hardened
- Stainless steel, hardened
- Thermoplastic POM, white

Screw
- Heat-treated steel, 1200 ±100 N/mm²
- Stainless steel 1.4305

MORE INFORMATION

Notes

Fully rotating ball.

Special types on request.

References

Thread lock on request, please refer to appendix - Technical Data -

Further products

Ball-Ended Thrust Screws, headless, with fine-pitch thread . . . . . → p. 307
Ball-Ended Thrust Screws, headless, round ball and hexalobular socket. . . . → p. 309

DRAWING

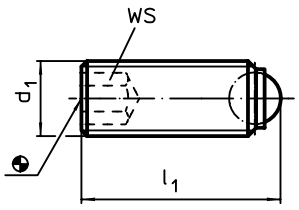

ORDER INFORMATION

Dimensions d_1 [mm]	l_1 [mm]	Ball [mm]	WS [mm]	Load capacity for static load[1] max. [kN]	min. [°C]	max. [°C]	[g]	Art. No. heat-treated steel	Art. No. stainless steel
round ball									
M 3	**5,0**	1,5	1,5	2,5	–	250	0,15	22720.0032	22720.0747
	7,5	1,5	1,5	2,5	–	250	0,22	22720.0033	22720.0748
	10,0	1,5	1,5	2,5	–	250	0,33	22720.0034	22720.0749
M 4	**6,0**	2,5	2,0	3,5	–	250	0,54	22720.0042	22720.0750
	8,0	2,5	2,0	3,5	–	250	0,61	22720.0043	22720.0752
	10,0	2,5	2,0	3,5	–	250	0,80	22720.0044	22720.0754
	12,0	2,5	2,0	3,5	–	250	0,69	22720.0045	22720.0756
	16,0	2,5	2,0	3,5	–	250	1,20	22720.0046	22720.0758
M 5	**8,0**	3,0	2,5	4,5	–	250	0,80	22720.0052	22720.0760
	10,0	3,0	2,5	4,5	–	250	1,06	22720.0053	22720.0761
	12,0	3,0	2,5	4,5	–	250	1,30	22720.0054	22720.0762
	16,0	3,0	2,5	4,5	–	250	1,53	22720.0055	22720.0763
	20,0	3,0	2,5	4,5	–	250	2,20	22720.0056	22720.0764
	25,0	3,0	2,5	4,5	–	250	2,80	22720.0058	22720.0765
M 6	**10,8**	4,0	3,0	9,0	–	250	1,53	22720.0062	22720.0770
	12,8	4,0	3,0	9,0	–	250	1,86	22720.0063	22720.0772
	16,8	4,0	3,0	9,0	–	250	2,50	22720.0064	22720.0774
	20,8	4,0	3,0	9,0	–	250	3,30	22720.0065	22720.0775
	25,8	4,0	3,0	9,0	–	250	4,00	22720.0066	22720.0776
M 8	**11,2**	5,5	4,0	15,0	–	250	2,60	22720.0081	22720.0780
	13,2	5,5	4,0	15,0	–	250	3,00	22720.0082	22720.0782
	17,2	5,5	4,0	15,0	–	250	4,20	22720.0083	22720.0783
	21,2	5,5	4,0	15,0	–	250	5,40	22720.0084	22720.0784
	26,2	5,5	4,0	15,0	–	250	6,90	22720.0085	22720.0785
	31,2	5,5	4,0	15,0	–	250	8,40	22720.0086	22720.0786

[1] Statements on load capacity are not valid for the stainless steel type (except the type fitted with thermoplastic balls). →

Dimensions			WS	Load capacity for static load[1] max.				Art. No.	
d_1	l_1	Ball			min.	max.		heat-treated steel	stainless steel
[mm]			[mm]	[kN]	[°C]		[g]		
M10	**13,7**	7,0	5,0	20,0	–	250	4,80	22720.0101	22720.0790
	17,7	7,0	5,0	20,0	–	250	6,20	22720.0102	22720.0792
	21,7	7,0	5,0	20,0	–	250	8,10	22720.0103	22720.0793
	26,7	7,0	5,0	20,0	–	250	11,00	22720.0104	22720.0794
	31,7	7,0	5,0	20,0	–	250	13,00	22720.0105	22720.0795
	36,7	7,0	5,0	20,0	–	250	15,00	22720.0106	22720.0796
	41,7	7,0	5,0	20,0	–	250	15,00	22720.0108	22720.0798
M12	**18,0**	8,5	6,0	30,0	–	250	9,30	22720.0121	22720.0800
	22,0	8,5	6,0	30,0	–	250	11,00	22720.0122	22720.0802
	27,0	8,5	6,0	30,0	–	250	15,00	22720.0123	22720.0803
	32,0	8,5	6,0	30,0	–	250	18,00	22720.0124	22720.0804
	42,0	8,5	6,0	30,0	–	250	25,00	22720.0126	22720.0806
	52,0	8,5	6,0	30,0	–	250	32,50	22720.0128	22720.0808
M16	**23,3**	12,0	8,0	60,0	–	250	22,00	22720.0161	22720.0810
	28,3	12,0	8,0	60,0	–	250	27,00	22720.0162	22720.0812
	38,3	12,0	8,0	60,0	–	250	40,00	22720.0164	22720.0814
	53,3	12,0	8,0	60,0	–	250	62,00	22720.0166	22720.0816
M20	**34,2**	15,0	10,0	90,0	–	250	52,00	22720.0202	–
	44,2	15,0	10,0	90,0	–	250	72,00	22720.0204	–
	54,2	15,0	10,0	90,0	–	250	93,00	22720.0205	–
	64,2	15,0	10,0	90,0	–	250	115,00	22720.0206	–
M24	**39,7**	18,0	12,0	120,0	–	250	87,00	22720.0242	–
	54,7	18,0	12,0	120,0	–	250	129,00	22720.0244	–
	84,7	18,0	12,0	120,0	–	250	222,00	22720.0246	–
round ball from thermoplastic									
M 4	**6,0**	2,5	2,0	0,3	-30	80	0,23	22720.0342	22720.0252
	8,0	2,5	2,0	0,3	-30	80	0,35	22720.0343	22720.0253
	10,0	2,5	2,0	0,3	-30	80	0,70	22720.0344	22720.0254
	12,0	2,5	2,0	0,3	-30	80	0,85	22720.0345	22720.0255
	16,0	2,5	2,0	0,3	-30	80	1,05	22720.0346	22720.0256
M 5	**8,0**	3,0	2,5	0,5	-30	80	0,76	22720.0352	22720.0262
	10,0	3,0	2,5	0,5	-30	80	0,75	22720.0353	22720.0263
	12,0	3,0	2,5	0,5	-30	80	1,20	22720.0354	22720.0264
	16,0	3,0	2,5	0,5	-30	80	1,43	22720.0355	22720.0265
	20,0	3,0	2,5	0,5	-30	80	1,90	22720.0356	22720.0266
	25,0	3,0	2,5	0,5	-30	80	2,50	22720.0358	22720.0267
M 6	**10,8**	4,0	3,0	0,9	-30	80	1,10	22720.0362	22720.0272
	12,8	4,0	3,0	0,9	-30	80	1,43	22720.0363	22720.0273
	16,8	4,0	3,0	0,9	-30	80	2,09	22720.0364	22720.0274
	20,8	4,0	3,0	0,9	-30	80	2,74	22720.0365	22720.0275
	25,8	4,0	3,0	0,9	-30	80	3,80	22720.0366	22720.0276
M 8	**11,2**	5,5	4,0	1,5	-30	80	1,92	22720.0381	22720.0281
	13,2	5,5	4,0	1,5	-30	80	2,40	22720.0382	22720.0282
	17,2	5,5	4,0	1,5	-30	80	3,60	22720.0383	22720.0283
	21,2	5,5	4,0	1,5	-30	80	4,60	22720.0384	22720.0284
	26,2	5,5	4,0	1,5	-30	80	6,30	22720.0385	22720.0285
	31,2	5,5	4,0	1,5	-30	80	7,80	22720.0386	22720.0286
M10	**13,7**	7,0	5,0	2,0	-30	80	3,50	22720.0401	22720.0291
	17,7	7,0	5,0	2,0	-30	80	4,80	22720.0402	22720.0292
	21,7	7,0	5,0	2,0	-30	80	6,80	22720.0403	22720.0293
	26,7	7,0	5,0	2,0	-30	80	9,40	22720.0404	22720.0294
	31,7	7,0	5,0	2,0	-30	80	12,00	22720.0405	22720.0295
	36,7	7,0	5,0	2,0	-30	80	14,00	22720.0406	22720.0296
	41,7	7,0	5,0	2,0	-30	80	17,00	22720.0408	22720.0297
M12	**18,0**	8,5	6,0	3,0	-30	80	6,80	22720.0421	22720.0301
	22,0	8,5	6,0	3,0	-30	80	9,20	22720.0422	22720.0302
	27,0	8,5	6,0	3,0	-30	80	12,00	22720.0423	22720.0303
	32,0	8,5	6,0	3,0	-30	80	16,00	22720.0424	22720.0304
	42,0	8,5	6,0	3,0	-30	80	23,00	22720.0426	22720.0306
	52,0	8,5	6,0	3,0	-30	80	30,00	22720.0428	22720.0308

[1] Statements on load capacity are not valid for the stainless steel type (except the type fitted with thermoplastic balls).

2

Ball-Ended Thrust Screws • headless, flat-faced ball

EH 22720.

PRODUCT DESCRIPTION

Ball-ended thrust screws with thermoplastic ball are used for pressure sensitive pieces.
For clamping and supporting of surfaces that are not exactly parallel.
Maximised load transmission due to moveable ball.

Material

Ball
- Ball-bearing steel, hardened
- Stainless steel, hardened
- Thermoplastic POM, red

Screw
- Heat-treated steel, 1200 ±100 N/mm²
- Stainless steel 1.4305

MORE INFORMATION

Notes

Fully rotating ball.
Special types on request.

References

Thread lock on request, please refer to appendix - Technical Data -

Further products

Ball-Ended Thrust Screws, headless, ball protected against rotating . . . . . → p. 297
Ball-Ended Thrust Screws, headless, with fine-pitch thread . . . . . → p. 307
Ball-Ended Thrust Screws, headless, short. . . . . → p. 308
Ball-Ended Thrust Screws, headless, flat-faced ball and hexalobular socket . → p. 310

DRAWING

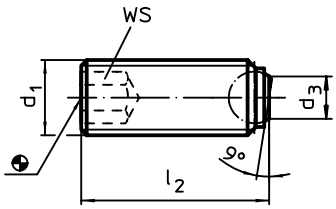

ORDER INFORMATION

Dimensions				WS	Load capacity for static load[1] max.				Art. No.	
d_1	l_2	d_3	Ball			min.	max.		heat-treated steel	stainless steel
[mm]				[mm]	[kN]	[°C]		[g]		
plain surface										
M 4	**5,6**	1,8	2,5	2,0	3,5	–	250	0,30	22720.0542	22720.0827
	7,6	1,8	2,5	2,0	3,5	–	250	0,40	22720.0543	22720.0828
	9,6	1,8	2,5	2,0	3,5	–	250	0,54	22720.0544	22720.0829
	11,6	1,8	2,5	2,0	3,5	–	250	0,91	22720.0545	22720.0830
	15,6	1,8	2,5	2,0	3,5	–	250	0,97	22720.0546	22720.0832
M 5	**7,5**	2,2	3,0	2,5	4,5	–	250	0,62	22720.0552	22720.0833
	9,5	2,2	3,0	2,5	4,5	–	250	0,84	22720.0553	22720.0834
	11,5	2,2	3,0	2,5	4,5	–	250	1,10	22720.0554	22720.0835
	15,5	2,2	3,0	2,5	4,5	–	250	1,70	22720.0555	22720.0836
	19,5	2,2	3,0	2,5	4,5	–	250	2,20	22720.0556	22720.0837
	24,5	2,2	3,0	2,5	4,5	–	250	2,60	22720.0558	22720.0838
M 6	**10,0**	3,2	4,0	3,0	9,0	–	250	1,50	22720.0562	22720.0840
	12,0	3,2	4,0	3,0	9,0	–	250	1,60	22720.0563	22720.0842
	16,0	3,2	4,0	3,0	9,0	–	250	2,50	22720.0564	22720.0844
	20,0	3,2	4,0	3,0	9,0	–	250	3,20	22720.0565	22720.0845
	25,0	3,2	4,0	3,0	9,0	–	250	3,80	22720.0566	22720.0846
M 8	**10,0**	4,5	5,5	4,0	15,0	–	250	2,60	22720.0581	22720.0850
	12,0	4,5	5,5	4,0	15,0	–	250	2,90	22720.0582	22720.0852
	16,0	4,5	5,5	4,0	15,0	–	250	4,00	22720.0583	22720.0853
	20,0	4,5	5,5	4,0	15,0	–	250	5,30	22720.0584	22720.0854
	25,0	4,5	5,5	4,0	15,0	–	250	6,80	22720.0585	22720.0855
	30,0	4,5	5,5	4,0	15,0	–	250	8,40	22720.0586	22720.0856

[1] Statements on load capacity are not valid for the stainless steel type (except the type fitted with thermoplastic balls). →

Dimensions				WS	Load capacity for static load[1] max.				Art. No.	
d_1	l_2	d_3	Ball			min.	max.		heat-treated steel	stainless steel
[mm]				[mm]	[kN]	[°C]		[g]		
M10	**12,0**	6,0	7,0	5,0	20,0	–	250	4,70	22720.0601	22720.0860
	16,0	6,0	7,0	5,0	20,0	–	250	6,10	22720.0602	22720.0862
	20,0	6,0	7,0	5,0	20,0	–	250	7,90	22720.0603	22720.0863
	25,0	6,0	7,0	5,0	20,0	–	250	10,00	22720.0604	22720.0864
	30,0	6,0	7,0	5,0	20,0	–	250	13,00	22720.0605	22720.0865
	35,0	6,0	7,0	5,0	20,0	–	250	15,00	22720.0606	22720.0866
	40,0	6,0	7,0	5,0	20,0	–	250	18,00	22720.0608	22720.0868
M12	**16,0**	7,2	8,5	6,0	30,0	–	250	9,10	22720.0621	22720.0870
	20,0	7,2	8,5	6,0	30,0	–	250	11,00	22720.0622	22720.0872
	25,0	7,2	8,5	6,0	30,0	–	250	14,00	22720.0623	22720.0873
	30,0	7,2	8,5	6,0	30,0	–	250	18,00	22720.0624	22720.0874
	40,0	7,2	8,5	6,0	30,0	–	250	25,00	22720.0626	22720.0876
	50,0	7,2	8,5	6,0	30,0	–	250	32,00	22720.0628	22720.0878
M16	**20,0**	10,7	12,0	8,0	60,0	–	250	21,00	22720.0661	22720.0880
	25,0	10,7	12,0	8,0	60,0	–	250	26,00	22720.0662	22720.0882
	35,0	10,7	12,0	8,0	60,0	–	250	39,00	22720.0664	22720.0884
	50,0	10,7	12,0	8,0	60,0	–	250	60,00	22720.0666	22720.0886
M20	**30,0**	13,5	15,0	10,0	90,0	–	250	49,00	22720.0702	–
	40,0	13,5	15,0	10,0	90,0	–	250	70,00	22720.0704	–
	50,0	13,5	15,0	10,0	90,0	–	250	90,00	22720.0705	–
	60,0	13,5	15,0	10,0	90,0	–	250	111,00	22720.0706	–
M24	**35,0**	15,8	18,0	12,0	120,0	–	250	86,00	22720.0742	–
	50,0	15,8	18,0	12,0	120,0	–	250	128,00	22720.0744	–
	80,0	15,8	18,0	12,0	120,0	–	250	219,00	22720.0746	–
flat-faced ball from thermoplastic, plain surface (protected against rotating)										
M 4	**5,9**	1,8	2,5	2,0	0,3	-30	80	0,24	22720.0452	22720.0492
	7,9	1,8	2,5	2,0	0,3	-30	80	0,35	22720.0453	22720.0493
	9,9	1,8	2,5	2,0	0,3	-30	80	0,49	22720.0454	22720.0494
	11,9	1,8	2,5	2,0	0,3	-30	80	0,88	22720.0455	22720.0495
	15,9	1,8	2,5	2,0	0,3	-30	80	0,92	22720.0456	22720.0496
M 5	**7,8**	2,1	3,0	2,5	0,5	-30	80	0,80	22720.0462	22720.0502
	9,8	2,1	3,0	2,5	0,5	-30	80	0,74	22720.0463	22720.0503
	11,8	2,1	3,0	2,5	0,5	-30	80	1,23	22720.0464	22720.0504
	15,8	2,1	3,0	2,5	0,5	-30	80	1,40	22720.0465	22720.0505
	19,8	2,1	3,0	2,5	0,5	-30	80	2,00	22720.0466	22720.0506
	24,8	2,1	3,0	2,5	0,5	-30	80	2,70	22720.0467	22720.0507
M 6	**10,3**	3,0	4,0	3,0	0,9	-30	80	1,10	22720.0472	22720.0512
	12,3	3,0	4,0	3,0	0,9	-30	80	1,70	22720.0473	22720.0513
	16,3	3,0	4,0	3,0	0,9	-30	80	2,10	22720.0474	22720.0514
	20,3	3,0	4,0	3,0	0,9	-30	80	2,76	22720.0475	22720.0515
	25,3	3,0	4,0	3,0	0,9	-30	80	3,60	22720.0476	22720.0516
M 8	**10,4**	4,2	5,5	4,0	1,5	-30	80	1,80	22720.0482	22720.0522
	12,4	4,2	5,5	4,0	1,5	-30	80	2,20	22720.0483	22720.0523
	16,4	4,2	5,5	4,0	1,5	-30	80	3,40	22720.0484	22720.0524
	20,4	4,2	5,5	4,0	1,5	-30	80	4,80	22720.0485	22720.0525
	25,4	4,2	5,5	4,0	1,5	-30	80	6,10	22720.0486	22720.0526
	30,4	4,2	5,5	4,0	1,5	-30	80	7,60	22720.0487	22720.0527
ribbed surface										
M 8	**10,0**	4,5	5,5	4,0	15,0	–	250	2,80	22720.0891	–
	12,0	4,5	5,5	4,0	15,0	–	250	2,70	22720.0892	–
	16,0	4,5	5,5	4,0	15,0	–	250	3,90	22720.0893	–
	20,0	4,5	5,5	4,0	15,0	–	250	5,10	22720.0894	–
	25,0	4,5	5,5	4,0	15,0	–	250	6,60	22720.0895	–
	30,0	4,5	5,5	4,0	15,0	–	250	8,10	22720.0896	–
M10	**12,0**	6,0	7,0	5,0	20,0	–	250	4,70	22720.0901	–
	16,0	6,0	7,0	5,0	20,0	–	250	5,80	22720.0902	–
	20,0	6,0	7,0	5,0	20,0	–	250	7,70	22720.0903	–
	25,0	6,0	7,0	5,0	20,0	–	250	10,00	22720.0904	–
	30,0	6,0	7,0	5,0	20,0	–	250	13,00	22720.0905	–
	35,0	6,0	7,0	5,0	20,0	–	250	15,00	22720.0906	–
	40,0	6,0	7,0	5,0	20,0	–	250	17,00	22720.0908	–

[1] Statements on load capacity are not valid for the stainless steel type (except the type fitted with thermoplastic balls).

Dimensions				WS	Load capacity for static load[1] max.				Art. No.	
d_1	l_2	d_3	Ball			min.	max.		heat-treated steel	stainless steel
[mm]				[mm]	[kN]	[°C]		[g]		
M12	16,0	7,2	8,5	6,0	30,0	–	250	8,60	22720.0921	–
	20,0	7,2	8,5	6,0	30,0	–	250	11,00	22720.0922	–
	25,0	7,2	8,5	6,0	30,0	–	250	14,00	22720.0923	–
	30,0	7,2	8,5	6,0	30,0	–	250	18,00	22720.0924	–
	40,0	7,2	8,5	6,0	30,0	–	250	25,00	22720.0926	–
	50,0	7,2	8,5	6,0	30,0	–	250	32,00	22720.0928	–
M16	20,0	10,7	12,0	8,0	60,0	–	250	21,00	22720.0961	–
	25,0	10,7	12,0	8,0	60,0	–	250	26,00	22720.0962	–
	35,0	10,7	12,0	8,0	60,0	–	250	40,00	22720.0964	–
	50,0	10,7	12,0	8,0	60,0	–	250	60,00	22720.0966	–
M20	30,0	13,5	15,0	10,0	90,0	–	250	50,00	22720.0972	–
	40,0	13,5	15,0	10,0	90,0	–	250	70,00	22720.0974	–
	50,0	13,5	15,0	10,0	90,0	–	250	89,00	22720.0975	–
	60,0	13,5	15,0	10,0	90,0	–	250	111,00	22720.0976	–
M24	35,0	15,8	18,0	12,0	120,0	–	250	84,00	22720.0982	–
	50,0	15,8	18,0	12,0	120,0	–	250	125,00	22720.0984	–
	80,0	15,8	18,0	12,0	120,0	–	250	219,00	22720.0986	–

[1] Statements on load capacity are not valid for the stainless steel type (except the type fitted with thermoplastic balls).

APPLICATION EXAMPLE

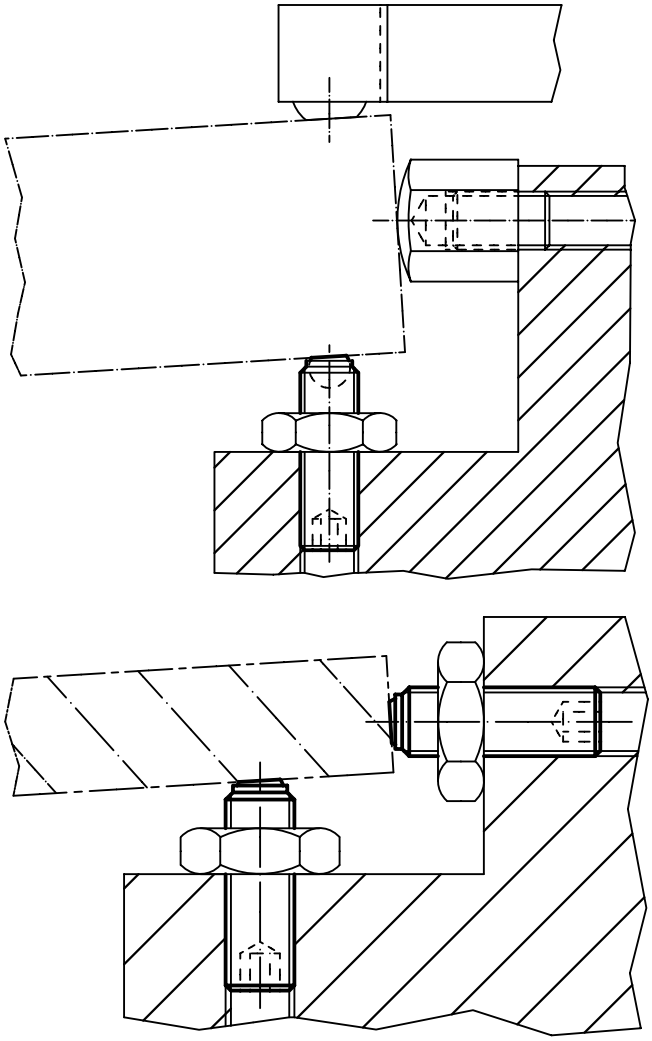

Ball-Ended Thrust Screws • headless, with fine-pitch thread

EH 22720.

PRODUCT DESCRIPTION

Also for positioning, clamping, tightening or supporting of surfaces that are not exactly parallel.
The fine-pitch thread allows a precise adjustment.
Maximised load transmission due to moveable ball.

Material

Ball
- Ball-bearing steel, hardened
- Stainless steel, hardened

Screw
- Heat-treated steel, 1200 ±100 N/mm²
- Stainless steel 1.4305

MORE INFORMATION

Notes
Fully rotating ball.
Special types on request.

References

Thread lock on request, please refer to appendix - Technical Data -

Further products

Ball-Ended Thrust Screws, headless, ball protected against rotating . . . . . → p. 297
Ball-Ended Thrust Screws, headless, round ball. . . . . → p. 302
Ball-Ended Thrust Screws, headless, flat-faced ball . . . . . → p. 304

DRAWING

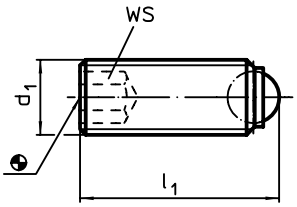

picture 1

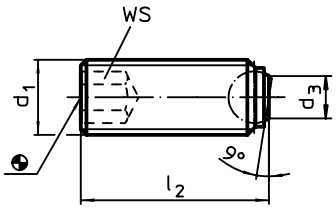

picture 2

ORDER INFORMATION

Dimensions					WS	Load capacity for static load[1] max.	max.		Art. No.	
d_1	l_1	l_2	d_3	Ball					heat-treated steel	stainless steel
[mm]					[mm]	[kN]	[°C]	[g]		
round ball – picture 1										
M4 x 0,35	6,0	–	–	2,5	2,0	3,5	250	0,4	22720.5030	22720.6030
	10,0	–	–	2,5	2,0	3,5	250	0,8	22720.5032	22720.6032
M4 x 0,5	6,0	–	–	2,5	2,0	3,5	250	0,4	22720.5040	22720.6040
	10,0	–	–	2,5	2,0	3,5	250	0,8	22720.5042	22720.6042
M5 x 0,5	8,0	–	–	3,0	2,5	4,5	250	0,7	22720.5050	22720.6050
	12,0	–	–	3,0	2,5	4,5	250	1,2	22720.5052	22720.6052
M6 x 0,5	10,8	–	–	4,0	3,0	9,0	250	1,3	22720.5060	22720.6060
	12,8	–	–	4,0	3,0	9,0	250	1,8	22720.5061	22720.6061
	16,8	–	–	4,0	3,0	9,0	250	2,4	22720.5062	22720.6062
	20,8	–	–	4,0	3,0	9,0	250	3,0	22720.5063	22720.6063
	25,8	–	–	4,0	3,0	9,0	250	3,0	22720.5064	22720.6064
M8 x 1	11,2	–	–	5,5	4,0	15,0	250	2,6	22720.5070	22720.6070
	21,2	–	–	5,5	4,0	15,0	250	5,4	22720.5073	22720.6073
flat-faced ball, plain surface – picture 2										
M4 x 0,35	–	5,6	1,3	2,5	2,0	3,5	250	0,4	22720.5230	22720.6230
		9,6	1,3	2,5	2,0	3,5	250	0,8	22720.5232	22720.6232
M4 x 0,5	–	5,6	1,3	2,5	2,0	3,5	250	0,4	22720.5240	22720.6240
		9,6	1,3	2,5	2,0	3,5	250	0,8	22720.5242	22720.6242
M5 x 0,5	–	7,5	2,2	3,0	2,5	4,5	250	0,7	22720.5250	22720.6250
		11,5	2,2	3,0	2,5	4,5	250	1,2	22720.5252	22720.6252
M6 x 0,5	–	10,0	3,2	4,0	3,0	9,0	250	1,3	22720.5260	22720.6260
		12,0	3,2	4,0	3,0	9,0	250	1,8	22720.5261	22720.6261
		16,0	3,2	4,0	3,0	9,0	250	2,4	22720.5262	22720.6262
		20,0	3,2	4,0	3,0	9,0	250	3,0	22720.5263	22720.6263
		25,0	3,2	4,0	3,0	9,0	250	3,0	22720.5264	22720.6264
M8 x 1	–	10,0	4,5	5,5	4,0	15,0	250	2,6	22720.5270	22720.6270
		20,0	4,5	5,5	4,0	15,0	250	5,3	22720.5273	22720.6273

[1] Statements on load capacity are not valid for the stainless steel type.

2

Ball-Ended Thrust Screws • headless, short

EH 22720.

PRODUCT DESCRIPTION

Ball-ended thrust screws, short execution, are particularly suitable for parallel shanks DIN 1835 E in combination, for instance, with Whistle Notch and Weldon Tool Holding Fixtures. For clamping and supporting of surfaces that are not exactly parallel.
Maximised load transmission due to moveable ball.

Material

Ball
- Ball-bearing steel, hardened

Screw
- Heat-treated steel, 1200 ±100 N/mm²

MORE INFORMATION

Notes

Fully rotating ball.

Special types on request.

References

Thread lock on request, please refer to appendix - Technical Data -

Further products

Ball-Ended Thrust Screws, headless, flat-faced ball . . . . . → p. 304

DRAWING

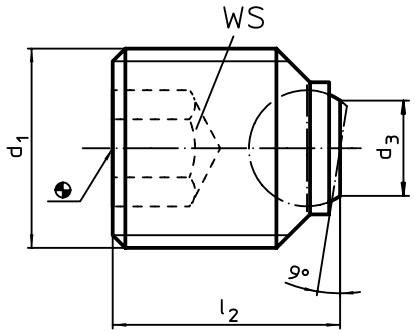

ORDER INFORMATION

Dimensions d_1	l_2	d_3	Ball	WS [mm]	Load capacity for static load max. [kN]	[g]	Art. No.
[mm]							
flat-faced ball, plain surface, for parallel shanks DIN 1835 E							
M14	**16**	7,2	8,5	6	30	13	22720.0641
M16	**16**	7,2	8,5	8	30	16	22720.0660
M18 x 2	**20**	10,7	12,0	10	60	25	22720.0682
M20 x 2	**20**	10,7	12,0	10	60	32	22720.0692
	25	10,7	12,0	10	60	42	22720.0693
M24 x 2	**25**	13,5	15,0	12	90	59	22720.0730

APPLICATION EXAMPLE

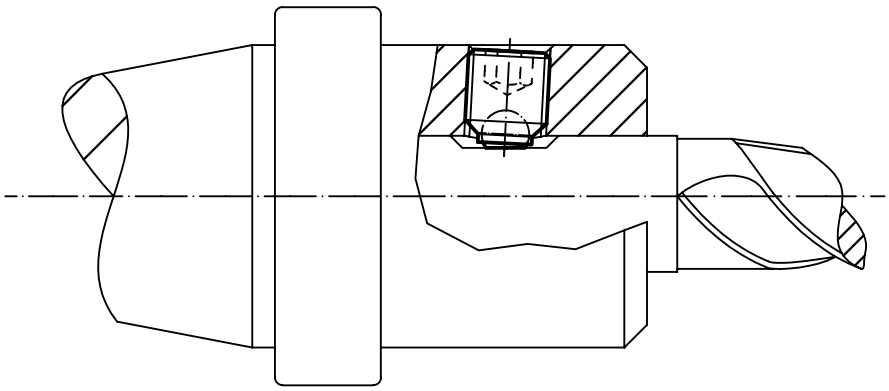

Ball-Ended Thrust Screws • headless, round ball and hexalobular socket

EH 22720.

PRODUCT DESCRIPTION

Also for positioning, clamping, tightening or supporting of surfaces that are not exactly parallel.
The hexalobular drive enables an optimal load transmission. The driving forces are not transmitted by edges (e.g. with the internal hexagon) but by surfaces. Due to the optimal load transmission, the tool wear is reduced and, as a result of this, the tool life is increased.

Material

Ball
- Ball-bearing steel, hardened
- Stainless steel, hardened

Screw
- Heat-treated steel, 1200 ±100 N/mm²
- Stainless steel 1.4305

Special types on request.

MORE INFORMATION

Notes

Fully rotating ball.

References

Thread lock on request, please refer to appendix - Technical Data -

Further products

Ball-Ended Thrust Screws, headless, round ball. . . . . → p. 302

DRAWING

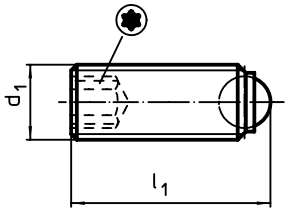

ORDER INFORMATION

Dimensions				Load capacity for static load[1] max.	max.		Art. No.	
d_1	l_1	Ball					heat-treated steel	stainless steel
[mm]				[kN]	[°C]	[g]		
round ball								
M4	**6,0**	2,5	8	3,5	250	0,5	22720.1042	22720.2042
	10,0	2,5	8	3,5	250	0,6	22720.1044	22720.2044
M5	**8,0**	3,0	10	4,5	250	0,8	22720.1052	22720.2052
	12,0	3,0	10	4,5	250	1,3	22720.1054	22720.2054
M6	**10,8**	4,0	15	9,0	250	1,5	22720.1062	22720.2062
	16,8	4,0	15	9,0	250	1,9	22720.1064	22720.2064

[1] Statements on load capacity are not valid for the stainless steel type (except the type fitted with thermoplastic balls).

2

Ball-Ended Thrust Screws • headless, flat-faced ball and hexalobular socket

EH 22720.

PRODUCT DESCRIPTION

For clamping and supporting of surfaces that are not exactly parallel.
The hexalobular drive enables an optimal load transmission. The driving forces are not transmitted by edges (e.g. with the internal hexagon) but by surfaces. Due to the optimal load transmission, the tool wear is reduced and, as a result of this, the tool life is increased.

Material

Ball
- Ball-bearing steel, hardened
- Stainless steel, hardened

Screw
- Heat-treated steel, 1200 ±100 N/mm²
- Stainless steel 1.4305

MORE INFORMATION

Notes

Fully rotating ball.

Special types on request.

References

Thread lock on request, please refer to appendix - Technical Data -

Further products

Ball-Ended Thrust Screws, headless, ball protected against rotating . . . . . → p. 297
Ball-Ended Thrust Screws, headless, flat-faced ball . . . . . → p. 304

DRAWING

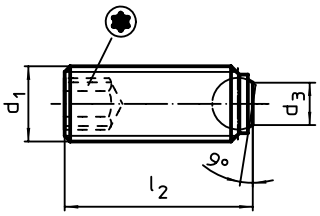

ORDER INFORMATION

Dimensions d_1 [mm]	l_2 [mm]	d_3 [mm]	Ball [mm]		Load capacity for static load[1] max. [kN]	max. [°C]	[g]	Art. No. heat-treated steel	Art. No. stainless steel
flat-faced ball, plain surface									
M4	**5,6**	1,8	2,5	8	3,5	250	0,5	22720.1542	22720.2542
	9,6	1,8	2,5	8	3,5	250	0,5	22720.1544	22720.2544
M5	**7,5**	2,2	3,0	10	4,5	250	0,6	22720.1552	22720.2552
	11,5	2,2	3,0	10	4,5	250	1,1	22720.1554	22720.2554
M6	**10,0**	3,2	4,0	15	9,0	250	1,5	22720.1562	22720.2562
	16,0	3,2	4,0	15	9,0	250	2,5	22720.1564	22720.2564

[1] Statements on load capacity are not valid for the stainless steel type (except the type fitted with thermoplastic balls).

Thrust Screws • with brass pad

EH 22760.

PRODUCT DESCRIPTION

Thrust screws can be used for a gentle clamping or pressing of thread spindles, axes, shafts and surface treated parts.

Material

Pad
- Brass

Screw
- Heat-treated steel, 1200 ±100 N/mm²
- Stainless steel 1.4305

MORE INFORMATION

Further products

Thrust Screws, with plastic pad . . . . . → p. 312

DRAWING

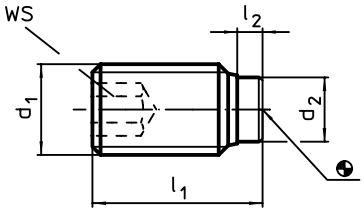

ORDER INFORMATION

Dimensions				WS	max.		Art. No.	
d_1	l_1	l_2	d_2				heat-treated steel	stainless steel
[mm]				[mm]	[°C]	[g]		
M 3	5,0	1,0	1,5	1,5	250	0,2	22760.0032	22760.0432
	7,5	1,0	1,5	1,5	250	0,3	22760.0034	22760.0434
	10,0	1,0	1,5	1,5	250	0,5	22760.0036	22760.0436
M 4	5,0	1,0	2,5	2,0	250	0,3	22760.0040	–
	6,5	1,2	2,5	2,0	250	0,3	22760.0042	22760.0442
	10,5	1,2	2,5	2,0	250	0,8	22760.0044	22760.0444
	16,5	1,2	2,5	2,0	250	1,2	22760.0046	22760.0446
M 5	6,0	1,0	3,0	2,5	250	0,6	22760.0050	–
	8,5	1,3	3,0	2,5	250	0,9	22760.0052	22760.0452
	12,5	1,3	3,0	2,5	250	1,4	22760.0054	22760.0454
	20,5	1,3	3,0	2,5	250	2,1	22760.0056	22760.0456
M 6	6,0	1,0	4,0	3,0	250	0,9	22760.0060	–
	11,5	1,9	4,0	3,0	250	1,7	22760.0062	22760.0462
	17,5	1,9	4,0	3,0	250	2,7	22760.0064	22760.0464
	26,5	1,9	4,0	3,0	250	4,2	22760.0066	22760.0466
M 8	8,0	1,4	5,5	4,0	250	2,2	22760.0080	–
	12,0	2,5	5,5	4,0	250	3,0	22760.0082	22760.0482
	22,0	2,5	5,5	4,0	250	5,8	22760.0086	22760.0486
	32,0	2,5	5,5	4,0	250	8,9	22760.0088	22760.0488
M10	10,0	1,5	7,0	5,0	250	4,3	22760.0100	–
	14,0	2,7	7,0	5,0	250	5,6	22760.0102	22760.0502
	18,0	2,7	7,0	5,0	250	6,7	22760.0104	22760.0504
	27,0	2,7	7,0	5,0	250	11,0	22760.0106	22760.0506
	37,0	2,7	7,0	5,0	250	16,0	22760.0108	22760.0508
M12	12,0	1,5	8,5	6,0	250	7,5	22760.0120	–
	18,5	3,4	8,5	6,0	250	10,0	22760.0122	22760.0522
	22,5	3,4	8,5	6,0	250	12,0	22760.0124	22760.0524
	32,5	3,4	8,5	6,0	250	20,0	22760.0126	22760.0526
	42,5	3,4	8,5	6,0	250	27,0	22760.0128	22760.0528

2

Thrust Screws • with plastic pad

EH 22760.

PRODUCT DESCRIPTION

Thrust screws can be used for a gentle clamping or pressing of thread spindles, axes, shafts and surface treated parts.

Material

Pad
- Thermoplastic POM, white

Screw
- Steel, blackened
- Stainless steel 1.4305

MORE INFORMATION

Further products

Thrust Screws, with brass pad . . . . . → p. 311

DRAWING

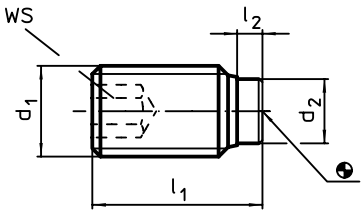

ORDER INFORMATION

Dimensions				WS				Art. No.	
d_1	l_1 ~	l_2 ~	d_2		min.	max.		stainless steel	steel
[mm]				[mm]	[°C]		[g]		
M 3	**3,8**	0,8	1,5	1,5	-30	80	0,2	22760.0632	–
	5,8	0,8	1,5	1,5	-30	80	0,3	22760.0634	–
	8,8	0,8	1,5	1,5	-30	80	0,4	22760.0636	–
	10,8	0,8	1,5	1,5	-30	80	0,5	22760.0638	–
M 4	**7,0**	1,0	2,0	2,0	-30	80	0,3	22760.0642	22760.0242
	9,0	1,0	2,0	2,0	-30	80	0,4	22760.0643	22760.0243
	11,0	1,0	2,0	2,0	-30	80	0,6	22760.0644	22760.0244
	13,0	1,0	2,0	2,0	-30	80	0,7	22760.0645	22760.0245
	17,0	1,0	2,0	2,0	-30	80	1,0	22760.0646	22760.0246
	21,0	1,0	2,0	2,0	-30	80	1,3	–	22760.0247
M 5	**9,0**	1,0	3,0	2,5	-30	80	0,7	22760.0652	22760.0252
	11,0	1,0	3,0	2,5	-30	80	0,8	22760.0653	22760.0253
	13,0	1,0	3,0	2,5	-30	80	1,0	22760.0654	22760.0254
	17,0	1,0	3,0	2,5	-30	80	1,2	22760.0655	22760.0255
	21,0	1,0	3,0	2,5	-30	80	2,0	22760.0656	22760.0256
	26,0	1,0	3,0	2,5	-30	80	2,6	–	22760.0257
M 6	**11,3**	1,3	3,5	3,0	-30	80	1,2	22760.0662	22760.0262
	13,3	1,3	3,5	3,0	-30	80	1,5	22760.0663	22760.0263
	17,3	1,3	3,5	3,0	-30	80	2,2	22760.0664	22760.0264
	21,3	1,3	3,5	3,0	-30	80	2,8	22760.0665	22760.0265
	26,3	1,3	3,5	3,0	-30	80	3,8	22760.0666	22760.0266
	33,3	1,3	3,5	3,0	-30	80	4,9	22760.0667	22760.0267
	41,3	1,3	3,5	3,0	-30	80	6,3	–	22760.0268
	51,3	1,3	3,5	3,0	-30	80	7,9	–	22760.0270
M 8	**13,6**	1,6	5,0	4,0	-30	80	2,6	22760.0682	22760.0282
	17,6	1,6	5,0	4,0	-30	80	3,6	22760.0683	22760.0283
	21,6	1,6	5,0	4,0	-30	80	5,0	22760.0684	22760.0284
	26,6	1,6	5,0	4,0	-30	80	6,4	22760.0685	22760.0285
	33,6	1,6	5,0	4,0	-30	80	8,5	22760.0686	22760.0286
	41,6	1,6	5,0	4,0	-30	80	11,0	22760.0687	22760.0287
	51,6	1,6	5,0	4,0	-30	80	14,0	–	22760.0288
	64,6	1,6	5,0	4,0	-30	80	18,0	–	22760.0290

→

Dimensions				WS				Art. No.	
d_1	l_1 ~	l_2 ~	d_2		min.	max.		stainless steel	steel
[mm]				[mm]	[°C]		[g]		
M10	**17,9**	1,9	6,5	5,0	-30	80	5,2	22760.0702	22760.0302
	21,9	1,9	6,5	5,0	-30	80	7,1	22760.0703	22760.0303
	26,9	1,9	6,5	5,0	-30	80	9,9	22760.0704	22760.0304
	33,9	1,9	6,5	5,0	-30	80	13,0	22760.0705	22760.0305
	41,9	1,9	6,5	5,0	-30	80	17,0	22760.0706	22760.0306
	51,9	1,9	6,5	5,0	-30	80	22,0	22760.0707	22760.0307
	64,9	1,9	6,5	5,0	-30	80	28,0	–	22760.0308
	81,9	1,9	6,5	5,0	-30	80	36,0	–	22760.0310
M12	**22,1**	2,1	8,0	6,0	-30	80	9,0	22760.0722	22760.0322
	27,1	2,1	8,0	6,0	-30	80	10,0	22760.0723	22760.0323
	34,1	2,1	8,0	6,0	-30	80	19,0	22760.0724	22760.0324
	42,1	2,1	8,0	6,0	-30	80	24,0	22760.0725	22760.0325
	52,1	2,1	8,0	6,0	-30	80	31,0	22760.0726	22760.0326
	65,1	2,1	8,0	6,0	-30	80	40,0	22760.0727	22760.0327
	82,1	2,1	8,0	6,0	-30	80	51,0	–	22760.0330
	102,1	2,1	8,0	6,0	-30	80	66,0	–	22760.0332

2

SELF-ALIGNING PADS

NO TRICK TO PARALLEL

Offering maximum versatility, a self-aligning pad can handle the most varied applications across a wide range of industries: fastening, clamping or supporting all sorts of surfaces - including non-parallel ones.
A self-aligning pad is used as a stop, support, plunger and can also be installed in clamping elements.The extensive product range includes various types ex stock:

www.halder.com/
SelfAligningPads-Video

SELF-ALIGNING PADS

- ribbed / plain ball
- with hard metall ball, ribbed
- adjustable, with ribbed / plain ball
- made from steel or stainless steel
- optionally self-resetting

Self-Aligning Pads

EH 22730.

PRODUCT DESCRIPTION

Self-aligning pads are used as stop, support and thrust pad and are suitable for installation in clamping elements.

Material

Ball
- Ball-bearing steel, hardened, bright
- Stainless steel 1.3541, nickel-plated

Body
- Heat-treated steel, tempered, phosphated
- Stainless steel 1.4057, heat-treated

MORE INFORMATION

Notes

Ball protected against rotating.
Loading capacity valid for steel and stainless steel designs.

DRAWING

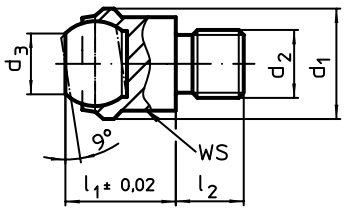

picture 1

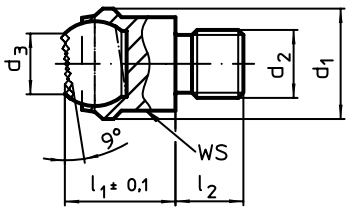

picture 2

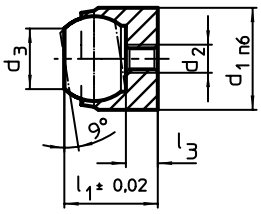

picture 3

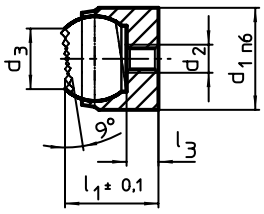

picture 4

ORDER INFORMATION

Dimensions							Location hole		WS	Load capacity for static load max.	Tightening torque max.		Art. No.	
d_1	d_2	d_3	l_1	l_2 -0,5	l_3 max.	Ball	Ø H7	Depth min.					heat-treated steel	stainless steel
[mm]							[mm]		[mm]	[kN]	[Nm]	[g]		
with male thread, flat-faced ball, plain surface – picture 1														
13	M 6	7,2	13	8	–	10	–	–	11	10	10,0	12	22730.0012	22730.0112
	M 8	7,2	13	8	–	10	–	–	11	10	25,0	13	22730.0013	22730.0113
20	M 8	10,5	18	10	–	16	–	–	17	25	25,0	39	22730.0018	22730.0118
	M10	10,5	18	10	–	16	–	–	17	25	46,0	41	22730.0019	22730.0119
	M12	10,5	18	12	–	16	–	–	17	25	82,0	44	22730.0020	22730.0120
30	M16	20,0	27	16	–	25	–	–	27	90	206,0	151	22730.0030	22730.0130
50	M20	34,5	35	20	–	40	–	–	41	165	407,0	490	22730.0050	22730.0150
	M24	34,5	35	24	–	40	–	–	41	165	698,0	526	22730.0060	22730.0160
with male thread, flat-faced ball, ribbed surface – picture 2														
13	M 6	7,2	13	8	–	10	–	–	11	10	10,0	12	22730.0312	–
	M 8	7,2	13	8	–	10	–	–	11	10	25,0	13	22730.0313	–
20	M 8	10,5	18	10	–	16	–	–	17	25	25,0	38	22730.0318	–
	M10	10,5	18	10	–	16	–	–	17	25	46,0	40	22730.0319	–
	M12	10,5	18	12	–	16	–	–	17	25	82,0	43	22730.0320	–
30	M16	20,0	27	16	–	25	–	–	27	90	206,0	150	22730.0330	–
50	M20	34,5	35	20	–	40	–	–	41	165	407,0	486	22730.0350	–
	M24	34,5	35	24	–	40	–	–	41	165	698,0	521	22730.0360	–
with locating hole, flat-faced ball, plain surface – picture 3														
12 n6	M 3	7,2	11	–	3,2	10	12	6	–	10[1)]	1,3	8	22730.0412	22730.0452
18 n6	M 4	10,5	17	–	4,0	16	18	8	–	25[1)]	2,9	29	22730.0418	22730.0458
28 n6	M 5	20,0	25	–	5,5	25	28	13	–	90[1)]	6,0	109	22730.0428	22730.0468
for locating hole, flat-faced ball, ribbed surface – picture 4														
12 n6	M 3	7,2	11	–	3,2	10	12	6	–	10[1)]	1,3	8	22730.0712	–
18 n6	M 4	10,5	17	–	4,0	16	18	8	–	25[1)]	2,9	29	22730.0718	–
28 n6	M 5	20,0	25	–	5,5	25	28	13	–	90[1)]	6,0	108	22730.0728	–

[1)] Applies only when the minimum bore depth is kept to.

2

Self-Aligning Pads • with hard metal ball, ribbed

EH 22730.

PRODUCT DESCRIPTION

Especially designed for cast parts (hard casting crust). To be used as support, thrust pad and for build into clamping elements.

Material

Ball
- Hard metal, ribbed, nickel-plated

Body
- Heat-treated steel, tempered, phosphated
- Stainless steel 1.4057, heat-treated

MORE INFORMATION

Notes

Ball protected against rotating.
Loading capacity valid for steel and stainless steel designs.

DRAWING

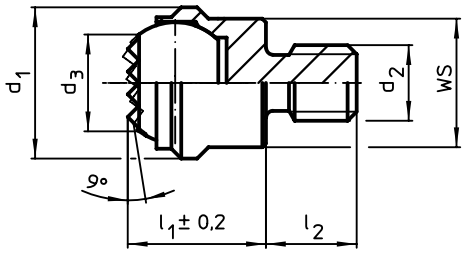

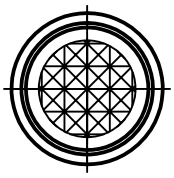

ORDER INFORMATION

Dimensions d_1	d_2	d_3	l_1 ±0,2	l_2 -0,5	Ball	WS	Load capacity for static load max.	Tightening torque max.		Art. No. heat-treated steel	Art. No. stainless steel
[mm]						[mm]	[kN]	[Nm]	[g]		
with male thread, flat-faced ball, ribbed surface											
13	M 6	8,3	13	8	10	11	10	10	14	22730.0362	22730.0390
	M 8	8,3	13	8	10	11	10	25	16	22730.0363	22730.0392
20	M 8	13,2	18	10	16	17	25	25	49	22730.0378	22730.0394
	M10	13,2	18	10	16	17	25	46	51	22730.0379	22730.0396
	M12	13,2	18	12	16	17	25	82	54	22730.0380	22730.0398
30	M16	20,0	27	16	25	27	90	206	190	22730.0381	22730.0399
50	M20	34,5	35	20	40	41	165	407	639	22730.0382	22730.0400
	M24	34,5	35	24	40	41	165	698	673	22730.0383	22730.0401

APPLICATION EXAMPLE

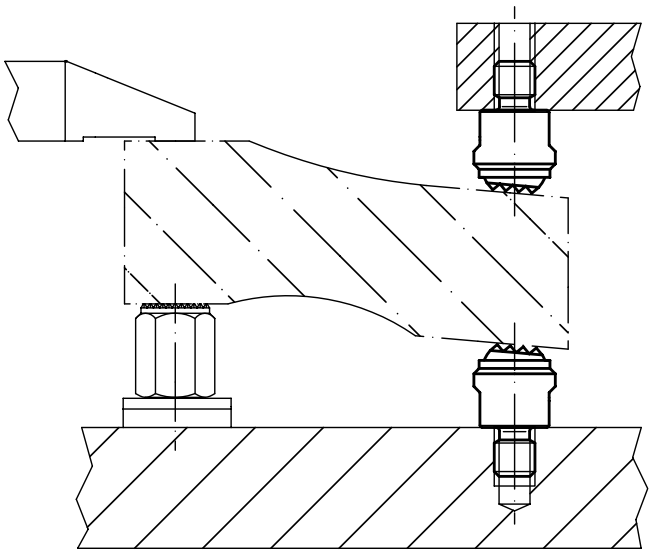

Self-Aligning Pads • self-resetting

EH 22731.

PRODUCT DESCRIPTION

Self-aligning pads are used as stop, support and thrust pad and are suitable for installation in clamping elements.
By resetting to the parallel position the contact point of the self-aligning pad provides a defined initial position, thus preventing the pad clamping in an oblique position when inserting the workpiece.

Material

Spring element
- Thermoplastic PUR

Ball
- Ball-bearing steel, hardened, bright
- Stainless steel 1.3541, nickel-plated

Body
- Heat-treated steel, tempered, phosphated
- Stainless steel 1.4057, heat-treated

MORE INFORMATION

Notes

Ball protected against rotating.
Loading capacity valid for steel and stainless steel designs.

DRAWING

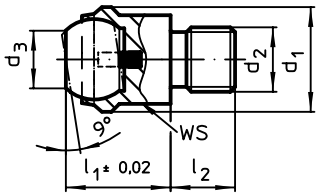

picture 1

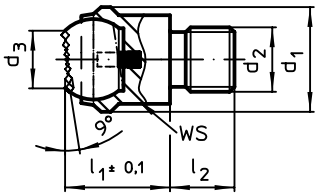

picture 2

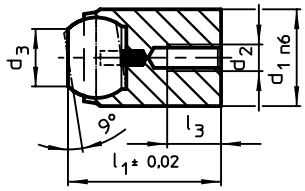

picture 3

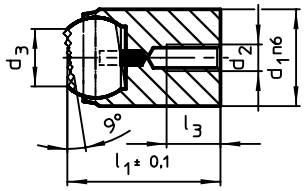

picture 4

ORDER INFORMATION

Dimensions							Location hole		WS	Load capacity for static load max.	Tightening torque max.		Art. No.	
d_1	d_2	d_3	l_1	l_2 -0,5	l_3 max.	Ball	Ø H7	Depth min.					heat-treated steel	stainless steel
[mm]							[mm]		[mm]	[kN]	[Nm]	[g]		
with male thread, flat-faced ball, plain surface – picture 1														
13	M 6	7,2	13	8	–	10	–	–	11	10	10,0	13	22731.0012	22731.0112
	M 8	7,2	13	8	–	10	–	–	11	10	25,0	14	22731.0013	22731.0113
20	M 8	10,5	18	10	–	16	–	–	17	25	25,0	39	22731.0018	22731.0118
	M10	10,5	18	10	–	16	–	–	17	25	46,0	40	22731.0019	22731.0119
	M12	10,5	18	12	–	16	–	–	17	25	82,0	44	22731.0020	22731.0120
30	M16	20,0	27	16	–	25	–	–	27	90	206,0	153	22731.0030	22731.0130
50	M20	34,5	35	20	–	40	–	–	41	165	407,0	491	22731.0050	22731.0150
	M24	34,5	35	24	–	40	–	–	41	165	698,0	526	22731.0060	22731.0160
with male thread, flat-faced ball, ribbed surface – picture 2														
13	M 6	7,2	13	8	–	10	–	–	11	10	10,0	13	22731.0312	–
	M 8	7,2	13	8	–	10	–	–	11	10	25,0	14	22731.0313	–
20	M 8	10,5	18	10	–	16	–	–	17	25	25,0	39	22731.0318	–
	M10	10,5	18	10	–	16	–	–	17	25	46,0	40	22731.0319	–
	M12	10,5	18	12	–	16	–	–	17	25	82,0	44	22731.0320	–
30	M16	20,0	27	16	–	25	–	–	27	90	206,0	152	22731.0330	–
50	M20	34,5	35	20	–	40	–	–	41	165	407,0	487	22731.0350	–
	M24	34,5	35	24	–	40	–	–	41	165	698,0	521	22731.0360	–

[1] Applies only when the minimum bore depth is kept to.

Dimensions							Location hole		WS	Load capacity for static load max.	Tightening torque max.		Art. No.	
d_1	d_2	d_3	l_1	l_2 -0,5	l_3 max.	Ball	Ø H7	Depth min.					heat-treated steel	stainless steel
[mm]							[mm]		[mm]	[kN]	[Nm]	[g]		
with locating hole, flat-faced ball, plain surface – picture 3														
12 n6	**M 3**	7,2	17	–	3,2	10	12	12	–	10[1)]	1,3	14	22731.0412	22731.0452
18 n6	**M 4**	10,5	23	–	4,0	16	18	14	–	25[1)]	2,9	40	22731.0418	22731.0458
28 n6	**M 5**	20,0	34	–	6,0	25	28	22	–	90[1)]	6,0	150	22731.0428	22731.0468
for locating hole, flat-faced ball, ribbed surface – picture 4														
12 n6	**M 3**	7,2	17	–	3,2	10	12	12	–	10[1)]	1,3	14	22731.0712	–
18 n6	**M 4**	10,5	23	–	4,0	16	18	14	–	25[1)]	2,9	40	22731.0718	–
28 n6	**M 5**	20,0	34	–	6,0	25	28	22	–	90[1)]	6,0	150	22731.0728	–

[1)] Applies only when the minimum bore depth is kept to.

APPLICATION EXAMPLE

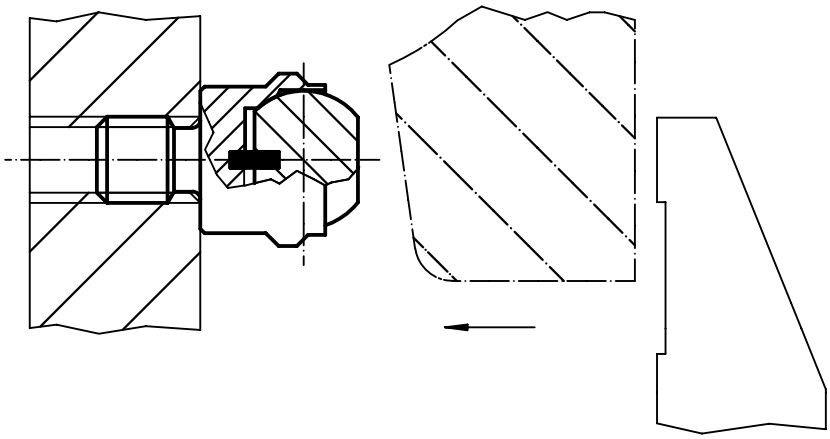

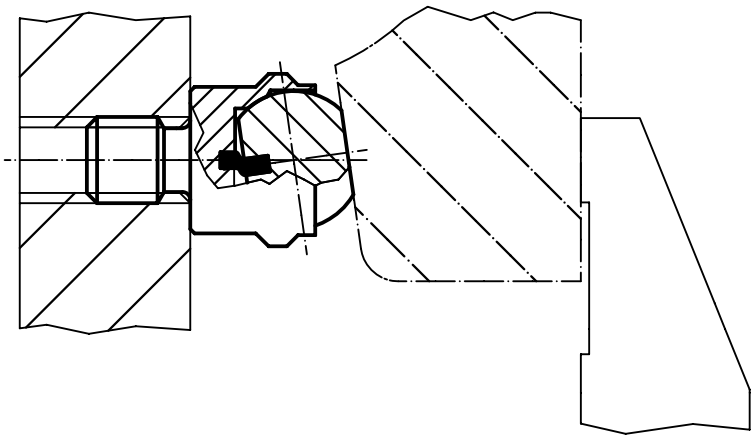

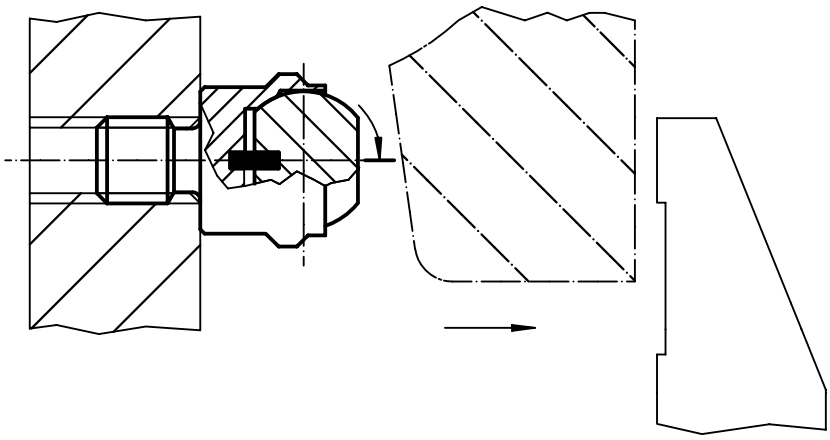

Self-Aligning Pads • with hard metal ball, ribbed and self-resetting

EH 22731.

PRODUCT DESCRIPTION

Especially designed for cast parts (hard casting crust). To be used as support, thrust pad and for build into clamping elements.
By resetting to the parallel position the contact point of the self-aligning pad provides a defined initial position, thus preventing the pad clamping in an oblique position when inserting the workpiece.

Material

Spring element
- Thermoplastic PUR

Ball
- Hard metal, ribbed, nickel-plated

Body
- Heat-treated steel, tempered, phosphated
- Stainless steel 1.4057, heat-treated

DRAWING

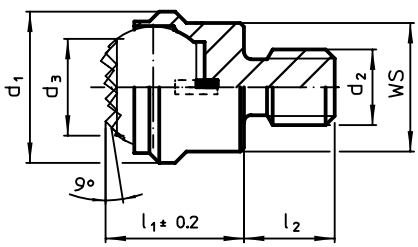

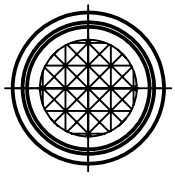

ORDER INFORMATION

Dimensions						WS	Load capacity for static load max.	Tightening torque max.		Art. No.	
d_1	d_2	d_3	l_1 ±0,2	l_2 -0,5	Ball					heat-treated steel	stainless steel
[mm]						[mm]	[kN]	[Nm]	[g]		
with male thread, flat-faced ball, ribbed surface											
13	M 6	8,3	13	8	10	11	10	10	14	22731.0362	22731.0390
	M 8	8,3	13	8	10	11	10	25	16	22731.0363	22731.0392
20	M 8	13,2	18	10	16	17	25	25	48	22731.0378	22731.0394
	M10	13,2	18	10	16	17	25	46	50	22731.0379	22731.0396
	M12	13,2	18	12	16	17	25	82	54	22731.0380	22731.0398
30	M16	20,0	27	16	25	27	90	206	190	22731.0381	22731.0399
50	M20	34,5	35	20	40	41	165	407	639	22731.0382	22731.0400
	M24	34,5	35	24	40	41	165	698	673	22731.0383	22731.0401

APPLICATION EXAMPLE

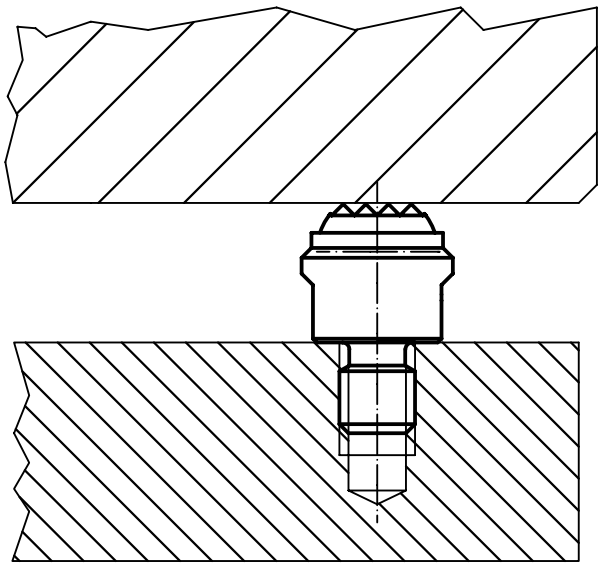

2

Self-Aligning Pads • adjustable

EH 22740.

PRODUCT DESCRIPTION

Self-aligning pads are used as stop, support and thrust pad and are suitable for installation in clamping elements.

Material

Ball
- Ball-bearing steel, hardened, bright
- Stainless steel 1.3541, nickel-plated

Body
- Heat-treated steel, tempered, phosphated
- Stainless steel 1.4057, heat-treated

Nut
- Steel, blackened (ISO 4035)
- Stainless steel

MORE INFORMATION

Notes

Ball protected against rotating.
Loading capacity valid for steel and stainless steel designs.
Special types on request.

DRAWING

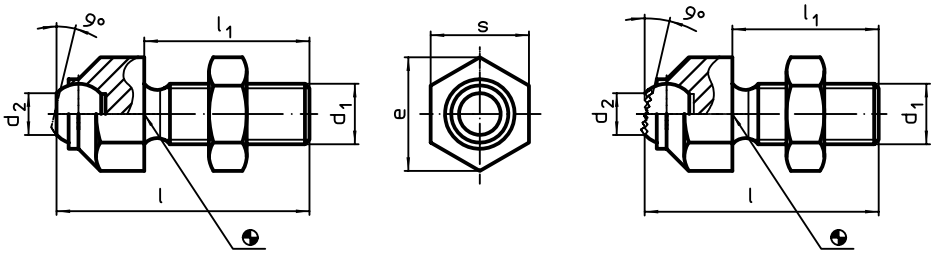

picture 1 picture 2

ORDER INFORMATION

Dimensions s	d1	l	l1	d2	e	Ball	Load capacity for static load max.	Tightening torque max.		Art. No. heat-treated steel	Art. No. stainless steel
[mm]							[kN]	[Nm]	[g]		
with flat-faced ball, plain surface – picture 1											
13	M 8	36,6	25	5,8	14,5	8,5	8	25	20	22740.0013	22740.0113
17	M10	45,7	30	8,6	19,0	12,0	8	46	44	22740.0016	22740.0116
	M12	50,7	35	8,6	19,0	12,0	15	82	56	22740.0017	22740.0117
24	M16	60,7	40	10,5	27,0	16,0	25	206	128	22740.0024	22740.0124
30	M20	77,3	50	20,0	33,0	25,0	90	407	275	22740.0030	22740.0130
36	M24	100,0	70	20,0	40,0	25,0	90	698	472	22740.0036	22740.0136
46	M30 x 1,5	100,0	65	34,6	51,0	40,0	165	1355	772	22740.0046	22740.0146
with flat-faced ball, ribbed surface – picture 2											
13	M 8	36,6	25	5,8	14,5	8,5	8	25	20	22740.0313	–
17	M10	45,7	30	8,6	19,0	12,0	8	46	44	22740.0316	–
	M12	50,7	35	8,6	19,0	12,0	15	82	56	22740.0317	–
24	M16	60,7	40	10,5	27,0	16,0	25	206	128	22740.0324	–
30	M20	77,3	50	20,0	33,0	25,0	90	407	274	22740.0330	–
36	M24	100,0	70	20,0	40,0	25,0	90	698	435	22740.0336	–
46	M30 x 1,5	100,0	65	34,6	51,0	40,0	165	1355	772	22740.0346	–

APPLICATION EXAMPLE

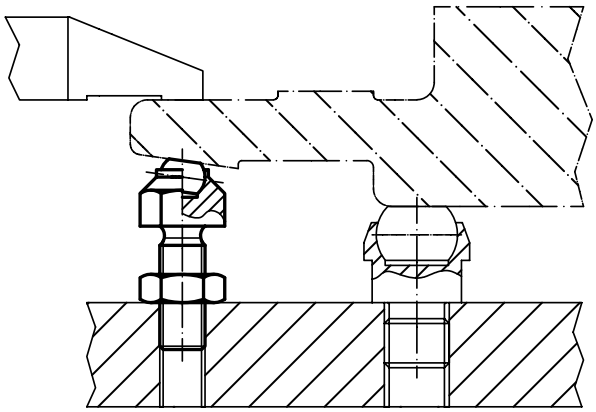

Self-Aligning Pads • adjustable, self-resetting

EH 22741.

PRODUCT DESCRIPTION

Self-aligning pads are used as stop, support and thrust pad and are suitable for installation in clamping elements.
By resetting to the parallel position the contact point of the self-aligning pad provides a defined initial position, thus preventing the pad clamping in an oblique position when inserting the workpiece.

Material

Spring element
- Thermoplastic PUR

Ball
- Ball-bearing steel, hardened, bright
- Stainless steel 1.3541, nickel-plated

Body
- Heat-treated steel, tempered, phosphated
- Stainless steel 1.4057, heat-treated

Nut
- Steel, blackened (ISO 4035)
- Stainless steel

MORE INFORMATION

Notes

Ball protected against rotating.
Loading capacity valid for steel and stainless steel designs.
Special types on request.

DRAWING

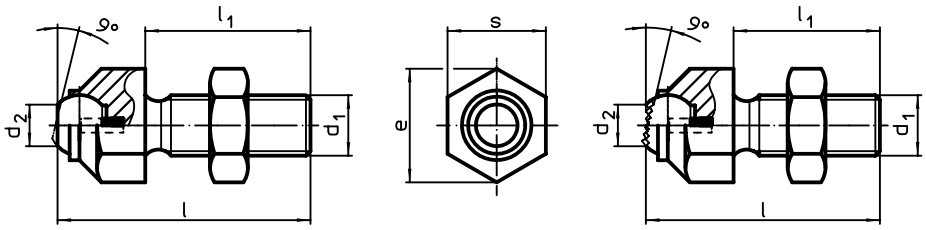

picture 1 picture 2

ORDER INFORMATION

Dimensions							Load capacity for static load max.	Tightening torque max.		Art. No.	
s	d_1	l	l_1	d_2	e	Ball				heat-treated steel	stainless steel
[mm]							[kN]	[Nm]	[g]		
with flat-faced ball, plain surface – picture 1											
13	M 8	36,6	25	5,8	14,5	8,5	8	25	19	22741.0013	22741.0113
17	M10	45,7	30	8,6	19,0	12,0	8	46	43	22741.0016	22741.0116
	M12	50,7	35	8,6	19,0	12,0	15	82	55	22741.0017	22741.0117
24	M16	60,7	40	10,5	27,0	16,0	25	206	124	22741.0024	22741.0124
30	M20	77,3	50	20,0	33,0	25,0	90	407	267	22741.0030	22741.0130
36	M24	100,0	70	20,0	40,0	25,0	90	698	457	22741.0036	22741.0136
46	M30 x 1,5	100,0	65	34,6	51,0	40,0	165	1355	797	22741.0046	22741.0146
with flat-faced ball, ribbed surface – picture 2											
13	M 8	36,6	25	5,8	14,5	8,5	8	25	19	22741.0313	–
17	M10	45,7	30	8,6	19,0	12,0	8	46	43	22741.0316	–
	M12	50,7	35	8,6	19,0	12,0	15	82	55	22741.0317	–
24	M16	60,7	40	10,5	27,0	16,0	25	206	124	22741.0324	–
30	M20	77,3	50	20,0	33,0	25,0	90	407	267	22741.0330	–
36	M24	100,0	70	20,0	40,0	25,0	90	698	457	22741.0336	–
46	M30 x 1,5	100,0	65	34,6	51,0	40,0	165	1355	797	22741.0346	–

TECHNICAL DATA

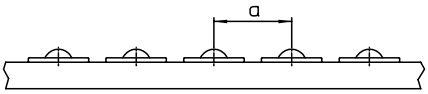

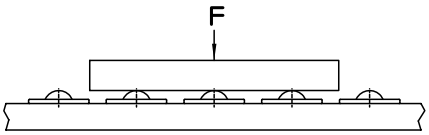

ARRANGEMENT OF BALL TRANSFER UNITS

How the ball transfer units should be arranged depends on the under-surface of the load to be transported. For loads with a uniform, even bottom surface, e.g. packing cases, the distance between the ball transfer units is calculated by dividing the smallest dimension by 2.5.

Example: under-surface of the load to be transported = 500 x 1000 mm
Distance between ball transfer units:

$$a = \frac{500\ \text{mm}}{2{,}5} = 200\ \text{mm}$$

CONVEYING SPEED AND LOAD CAPACITY

The maximum conveying speed allowed amounts to 2 m/s. The load capacities specified apply to any mounting position and are based on 106 rotations of the load ball.
With the units being used over a longer time at speeds exceeding 1 m/s, an increase in temperature as well as a reduction in travel life must be expected depending on the load, in particular with sizes 22750.0016/22750.0036.

Computation of Travel Life

$$L = \left(\frac{C}{F}\right)^3 10^6 \text{ rotations}$$

L = Travel life
C = Load capacity (N)
F = Load (N)

TEMPERATURE RESISTANCE

Ball transfer units with felt seals are temperatureresistant up to a permanent operating temperature of 100 °C.
At temperatures exceeding 100 °C, only non-galvanized ball transfer units with steel load ball and without felt seal should be used. Observe the reduction in load capacity! The load capacity should be multiplied with the temperature factor (see table).

Attention:
Only use high-temperature lubricants!
Observe the manufacturers' instructions!
If necessary, wash-off any present lubricating oil.

Temperature	Temperature Factor
°C	fT
125	0,9
150	0,8
175	0,7
200	0,5

LOAD DETERMINATION OF BALL TRANSFER UNITS

To determine the load of a ball transfer unit, the weight of the article to be conveyed should be divided by 3.
If the height tolerance of the load balls is good and the surface of the workpiece to be conveyed suitable, the calculation can be based on the number of ball transfer units under load.

Example:
Weight of the article to be conveyed = 300 kg

Ball transfer unit load

$$a = \frac{300\ \text{kg}}{3} = 100\ \text{kg}$$

FRICTION

The diagram shows the friction values as a function of load and speed for ball transfer units. These approximate values apply to all mounting positions with operation on a hardened steel plate.

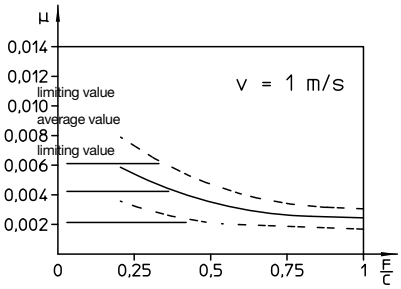

ASSEMBLY INSTRUCTIONS

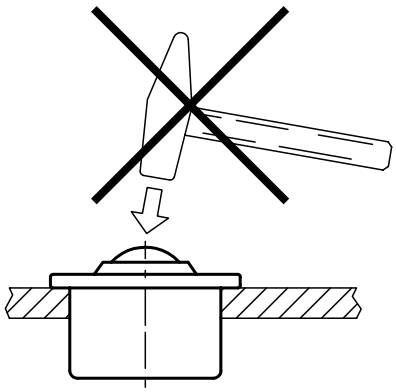

Note:
Information is valid for former steel designs.

Ball Casters • with sheet steel housing

EH 22750.

PRODUCT DESCRIPTION

Ball casters are modules for transport systems, conveyances, to working and packing facilities.
For example, parts can be easily moved, turned and controlled.
As from d_1 = 36 fitted with an oil drenched felt seal to protect against dirt.

Material

Cap
- Steel, zinc-plated by galvanization
- Stainless steel

Housing
- Steel, zinc-plated by galvanization
- Stainless steel

Ball
- Ball-bearing steel
- Stainless steel

MORE INFORMATION

Further products

Tolerance Rings . . . . . → p. 324

DRAWING

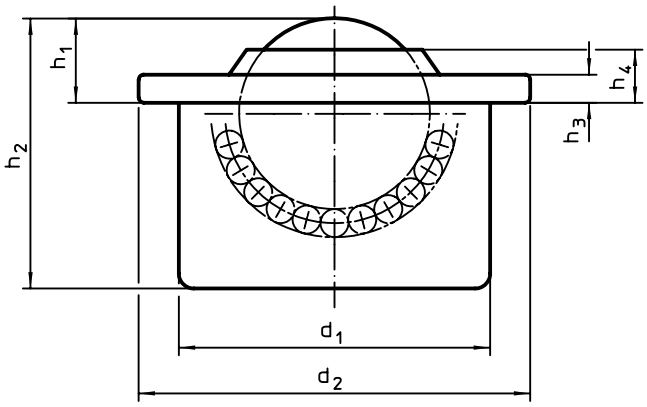

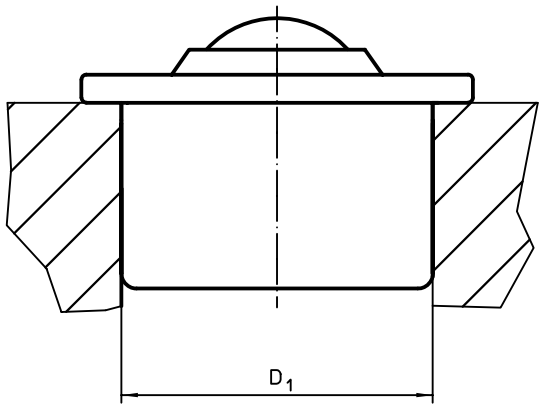

ORDER INFORMATION

d_1	Ball Ø	d_2	Dimensions h_1	h_2	h_3	h_4	Location hole D_1 [1]	Carrying figure C		Art. No.
			[mm]				[mm]	[N]	[g]	
cap and housing zinc-plated										
12,6 ±0,055	8	17	4,8 ±0,15	11,2	1,8	3,2	12,57 +0,03	100	7	22750.0000 [2]
18,0 ±0,055	12	23	7,4 ±0,15	15,5	2,0	4,3	17,97 +0,03	250	18	22750.0002 [2]
24,0 ±0,065	15	31	9,5 ±0,20	21,5	2,5	6,1	23,95 +0,05	500	40	22750.0004 [2]
36,0 ±0,080	22	45	9,8 ±0,20	29,5	2,9	5,7	35,90 +0,05	1300	134	22750.0008
45,0 ±0,080	30	55	13,8 ±0,30	37,5	3,7	7,9	44,85 +0,05	2500	277	22750.0012
62,0 ±0,095	45	75	19,0 ±0,40	53,7	4,2	10,3	61,83 +0,07	6000	741	22750.0016
all parts zinc-plated, ball from stainless steel										
12,6 ±0,055	8	17	4,8 ±0,15	11,2	1,8	3,2	12,57 +0,03	70	7	22750.0020 [2]
18,0 ±0,055	12	23	7,4 ±0,15	15,5	2,0	4,3	17,97 +0,03	180	18	22750.0022 [2]
24,0 ±0,065	15	31	9,5 ±0,20	21,5	2,5	6,1	23,95 +0,05	370	40	22750.0024 [2]
36,0 ±0,080	22	45	9,8 ±0,20	29,5	2,9	5,7	35,90 +0,05	970	132	22750.0028
45,0 ±0,080	30	55	13,8 ±0,30	37,5	3,7	7,9	44,85 +0,05	1900	273	22750.0032
62,0 ±0,095	45	75	19,0 ±0,40	53,7	4,2	10,3	61,83 +0,07	4500	739	22750.0036
all parts from stainless steel										
12,6 ±0,055	8	17	4,8 ±0,15	11,2	1,8	3,2	12,57 +0,03	70	7	22750.0040 [2]
18,0 ±0,055	12	23	7,4 ±0,15	15,5	2,0	4,3	17,97 +0,03	180	18	22750.0042 [2]
24,0 ±0,065	15	31	9,5 ±0,20	21,5	2,5	6,1	23,95 +0,05	370	39	22750.0044 [2]
36,0 ±0,080	22	45	9,8 ±0,20	29,5	2,9	5,7	35,90 +0,05	970	133	22750.0048
45,0 ±0,080	30	55	13,8 ±0,30	37,5	3,7	7,9	44,85 +0,05	1900	272	22750.0052

[1] Reference value for 2 mm sheet steel/ 5 mm aluminium (force fit)
[2] without felt seal

2

Tolerance Rings

EH 22750.

PRODUCT DESCRIPTION

The use of tolerance rings (for ball casters with sheet steel housing) allows larger tolerances between the parts to be connected.

Material

- Spring steel strip

DRAWING

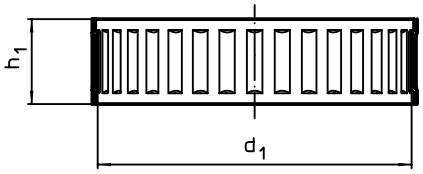

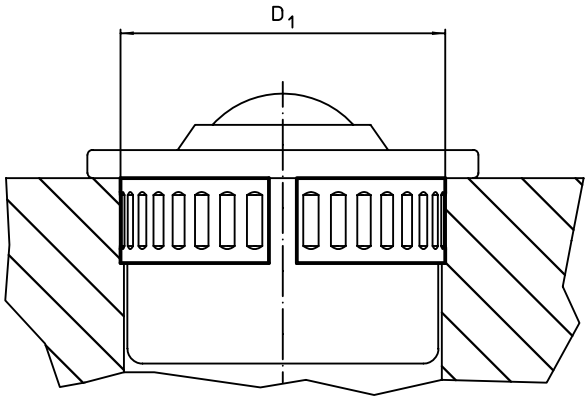

ORDER INFORMATION

Dimensions d_1 [mm]	h_1 +0,2 [mm]	Location hole D_1 [mm]	[g]	Art. No.
12,6	6,1	13,87 +0,15	0,4	22750.0060
18,0	6,1	19,70 +0,20	0,9	22750.0062
24,0	7,1	25,70 +0,20	1,4	22750.0064
36,0	12,1	37,70 +0,20	4,3	22750.0068
45,0	12,1	46,70 +0,20	5,3	22750.0072
62,0	15,1	64,10 +0,30	12,0	22750.0076

APPLICATION EXAMPLE

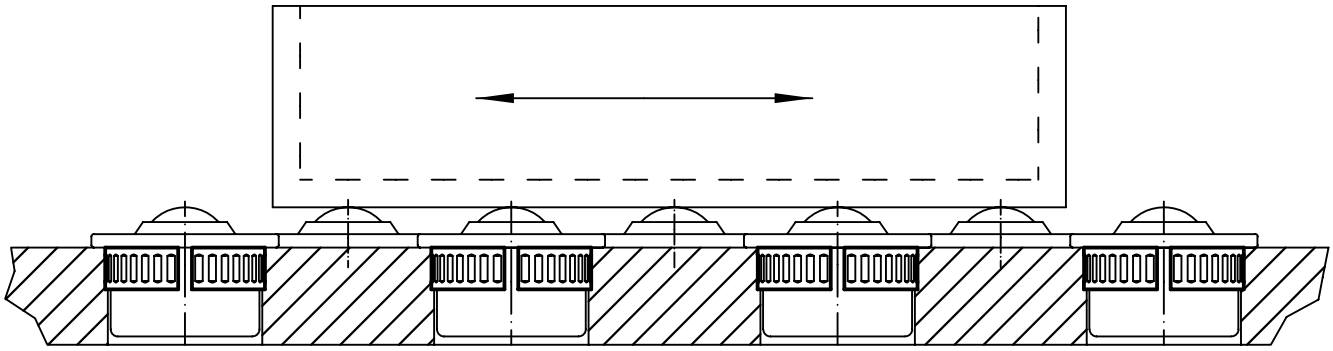

Ball Casters • with mounting elements

EH 22750.

PRODUCT DESCRIPTION

Material

Cap
- Steel, zinc-plated by galvanization

Housing
- Steel, zinc-plated by galvanization

Ball
- Ball-bearing steel
- Stainless steel

Assembly

Mounting is carried-out by means of spring-loaded claws allowing big tolerances in the location hole.
The ball casters can easily be mounted and disassembled from their functional side.
Due to the inclined cap form, the assembly mandrel EH 22750. should be used.

DRAWING

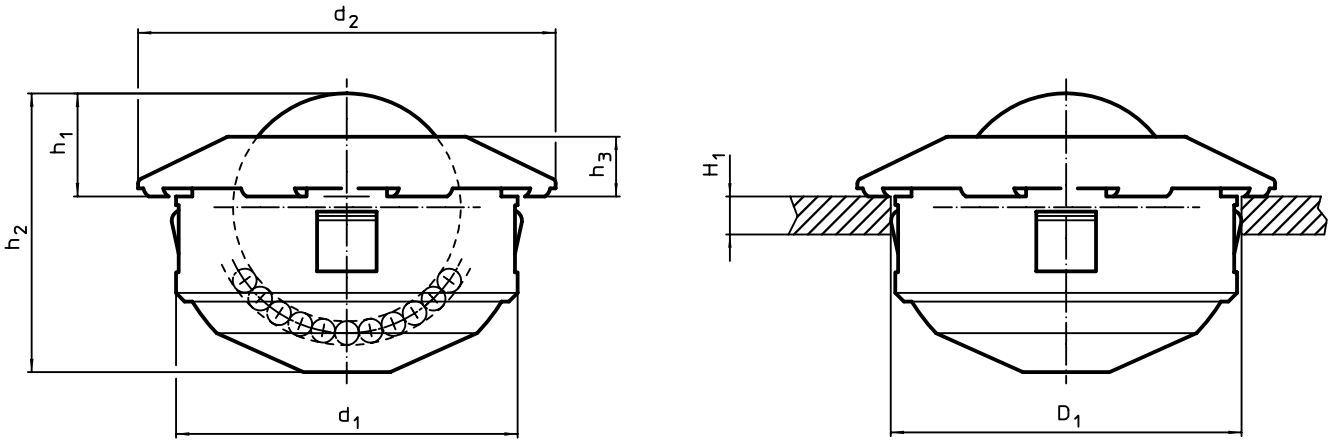

ORDER INFORMATION

Dimensions d_1	Ball Ø	d_2	h_1	h_2	h_3	H_1 min.	Location hole D_1	Carrying figure C		Art. No.
[mm]						[mm]	[mm]	[N]	[g]	
ball from ball-bearing steel										
24 -0,13	15	31	9,5 ±0,2	20,5	5,5	1,5	24	500	42	22750.0104
36 -0,16	22	45	9,8 ±0,2	28,6	6,0	2,0	36	1300	144	22750.0108
45 -0,16	30	55	13,8 ±0,3	37,5	8,0	2,5	45	2500	292	22750.0112
ball from stainless steel										
24 -0,13	15	31	9,5 ±0,2	20,5	5,5	1,5	24	370	42	22750.0124
36 -0,16	22	45	9,8 ±0,2	28,6	6,0	2,0	36	970	143	22750.0128
45 -0,16	30	55	13,8 ±0,3	37,5	8,0	2,5	45	1900	290	22750.0132

ACCESSORIES

	Suitable for ball caster [mm]	[g]	Art. No.
assembly tool			
	24	451	22750.0144
	36	480	22750.0148
	45	503	22750.0152

APPLICATION EXAMPLE

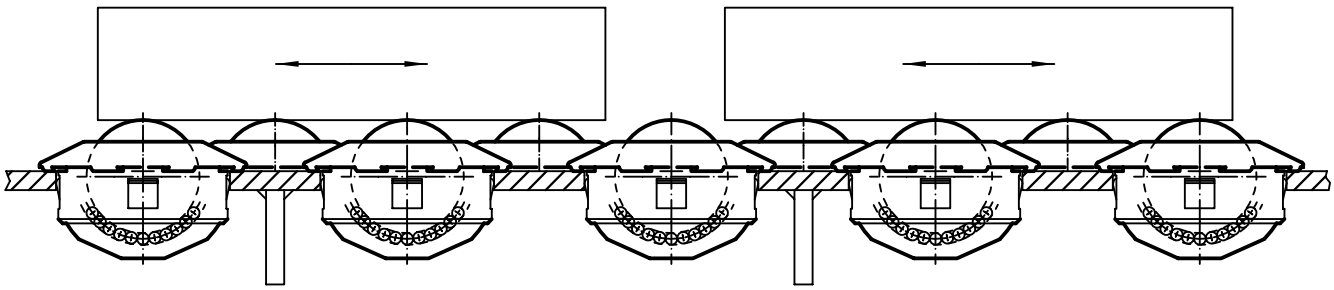

2

Ball Casters • plastic

EH 22751.

PRODUCT DESCRIPTION

Ball casters are module for transport systems, conveyances, to working and packing facilities.
For example, parts can be easily moved, turned and controlled.
Thanks to the technical properties of the plastic, the component does not require maintenance or lubrication and is also resistant to abrasion. In contrast to the steel model, the plastic model offers additional benefits such as electrical insulation and anti-magnetic characteristics thanks to the properties of its material.

Material

Cap
- Plastic, white

Housing
- Plastic, white

Ball
- Thermoplastic POM, white

Bearing ball
- Plastic
- Stainless steel

DRAWING

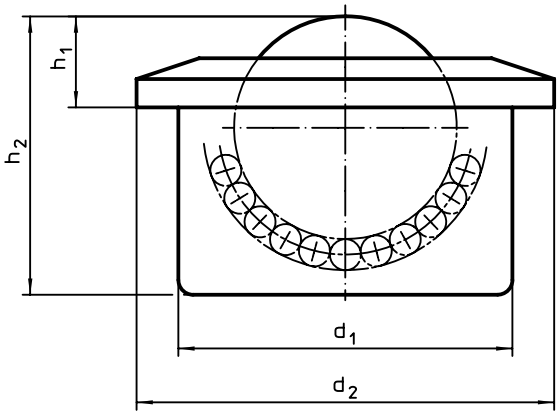

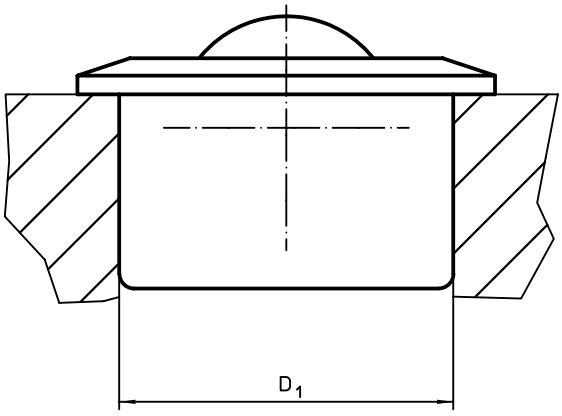

ORDER INFORMATION

Dimensions d_1	Ball Ø	d_2	h_1	h_2 [mm]	Location hole D_1 H7 [mm]	Carrying figure C [N]	min. [°C]	max. [°C]	[g]	Art. No.
bearing ball: plastic										
24	16	31	9,8	21	23,95	80	-40	80	11	22751.0015
36	24	45	9,8	30	35,95	110	-40	80	28	22751.0022
bearing ball: stainless steel										
24	16	31	9,8	21	23,95	300	-40	80	12	22751.0115
36	24	45	9,8	30	35,95	500	-40	80	27	22751.0122

Ball Casters • screwable, plain bearing

EH 22752.

PRODUCT DESCRIPTION

For positioning and aligning of workpieces.
Because of the slide bearing, the ball can roll permanently, and the surface of the workpiece is protected.
At temperatures > 20°C, the carrying figure decreases linearly. (Example: at 90°C the load bearing capacity is max. 60%)

Material

Bearing
- Plastic

Ball
- Ball-bearing steel, hardened
- Stainless steel, hardened

Screw
- Free cutting steel, blackened
- Stainless steel 1.4305

MORE INFORMATION

Notes

Special types on request.

DRAWING

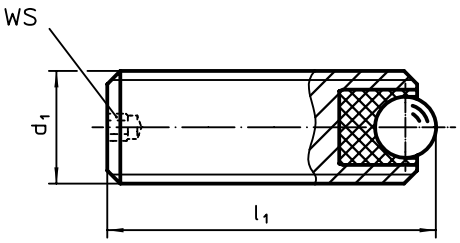

ORDER INFORMATION

Dimensions			WS	Load capacity for static load max.	Tightening torque max.				Art. No.	
d_1	l_1	Ball				min.	max.		free cutting steel	stainless steel
[mm]			[mm]	[N]	[Nm]	[°C]		[g]		
M 6	8	2,5	1,5	172	0,11	-50	90	1	22752.0061	22752.0561
	16	2,5	1,5	172	0,11	-50	90	3	22752.0064	22752.0564
M 8	10	3,5	1,5	336	0,28	-50	90	3	22752.0081	22752.0581
	20	3,5	1,5	336	0,28	-50	90	7	22752.0084	22752.0584
M10	12	4,5	2,0	556	0,58	-50	90	5	22752.0101	22752.0601
	25	4,5	2,0	556	0,58	-50	90	13	22752.0104	22752.0604
M12	16	6,5	2,5	1161	1,44	-50	90	10	22752.0121	22752.0621
	35	6,5	2,5	1161	1,44	-50	90	27	22752.0124	22752.0624
M16	20	8,5	3,0	1986	3,21	-50	90	24	22752.0161	22752.0661
	50	8,5	3,0	1986	3,21	-50	90	71	22752.0166	22752.0666

APPLICATION EXAMPLE

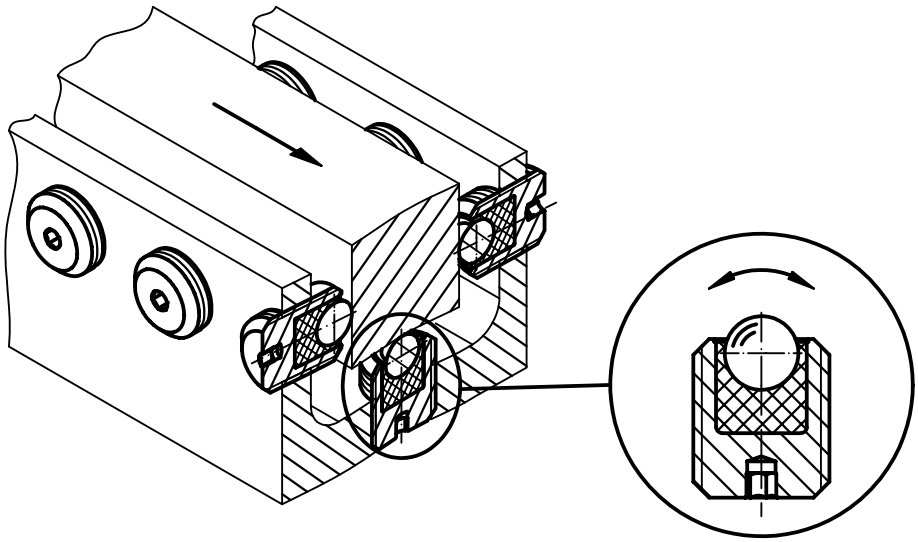

2

Ball Casters • plain bearing

EH 22753.

PRODUCT DESCRIPTION

Ball casters are module for transport systems, conveyances, to working and packing facilities.
For example, parts can be easily moved, turned and controlled.
The ball casters are maintenance-free.
At temperatures > 20°C, the carrying figure decreases linearly. (Example: at 90°C the load bearing capacity is max. 60%)

Material

Housing
- Stainless steel

Bearing
- Plastic

Ball
- Stainless steel, hardened

Assembly

Locking in place is achieved by pressing-in the knurled contour ball caster. Ball casters can be mounted from the functional side, using the assembly tool.
Knurling on the external contour allows installation into bore holes without additional preparatory steps.

DRAWING

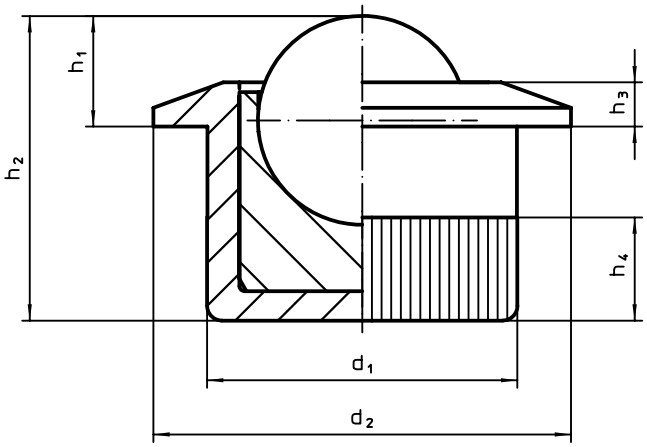

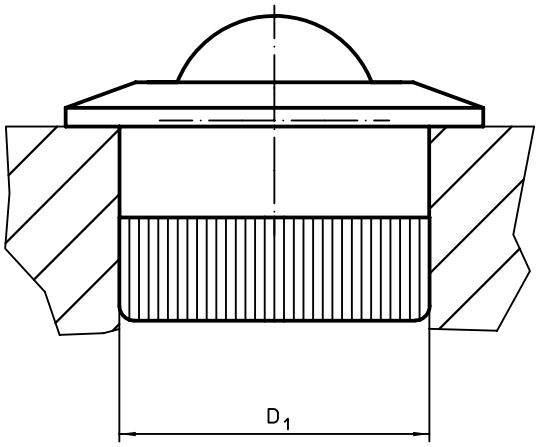

ORDER INFORMATION

Dimensions							Location hole	Carrying figure				Art. No.
d_1	Ball Ø	d_2	h_1	h_2	h_3	h_4	D_1 H7	C	min.	max.		
[mm]							[mm]	[N]	[°C]		[g]	
10,0	6,5	13	3,2	11,2	1,2	4,2	10,0	1161	-50	90	4	22753.0065
12,6	8,5	17	4,5	12,4	1,8	4,2	12,6	1986	-50	90	8	22753.0085

ACCESSORIES

	Suitable for ball caster [mm]	[g]	Art. No.
assembly tool			
	6,5	118	22753.9965
	8,5	118	22753.9985

Positioning Sensors • pneumatic

EH 22800.

PRODUCT DESCRIPTION

Used in jigs and fixtures as positioning control for pre-machined workpieces.
Sensitivity accuracy is 0.015-0.075 mm, depending on the workpiece surface.
Contact control is achieved through compressed air backwash and is indicated on the monitoring unit.

Material

Seating pins
- Tool steel, hardened, ground

Seal
- PVC

Screw
- Steel, zinc-plated by galvanization, quality 4.8 (ISO 1207)

Plug-in nipple
- Brass

MORE INFORMATION

Notes

Further information on request.

Further products

Monitoring Units for Positioning Sensors, pneumatic . . . . . → p. 333

DRAWING

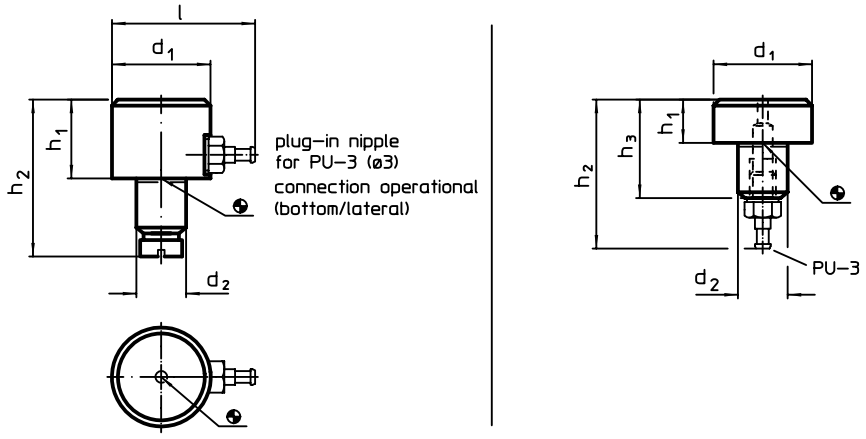

picture 1 picture 2

ORDER INFORMATION

Dimensions							Art. No.
d_1	h_1 h9	d_2 n6	h_2	h_3	l		
[mm]						[g]	
bottom/lateral connection – picture 1							
16	**13**	8	27,0	–	28,0	32	22800.0010
25	**20**	12	39,0	–	36,5	93	22800.0020
bottom connection – picture 2							
16	**5**	8	28,5	15	–	11	22800.0100

APPLICATION EXAMPLE

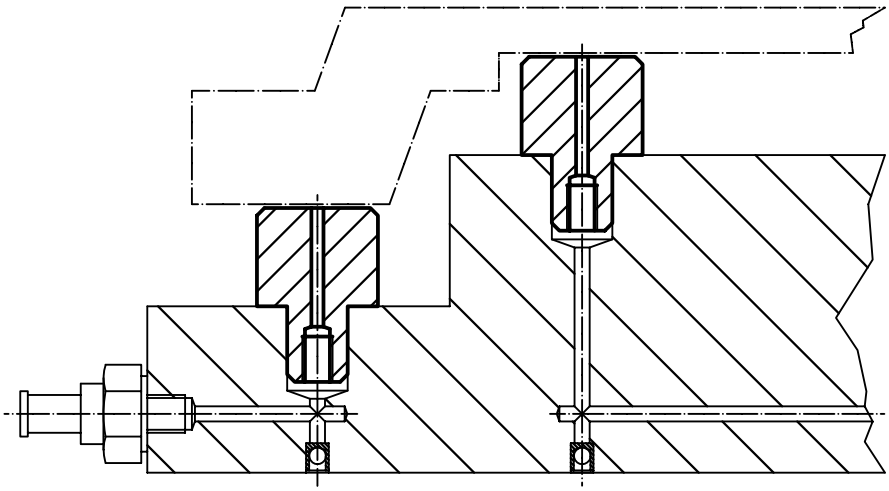

2

Positioning Sensors • pneumatic

EH 22800.

PRODUCT DESCRIPTION

Used in jigs and fixtures as positioning control for pre-machined workpieces.
Sensitivity accuracy is 0.015-0.075 mm, depending on the workpiece surface.
Contact control is achieved through compressed air backwash and is indicated on the monitoring unit.

Material

Seating pins
- Tool steel, hardened, ground

Seal
- PVC

Supporting bar
- Steel, blackened

Plug-in nipple
- Brass

MORE INFORMATION

Notes

Further information on request.

Further products

Monitoring Units for Positioning Sensors, pneumatic . . . . . → p. 333

DRAWING

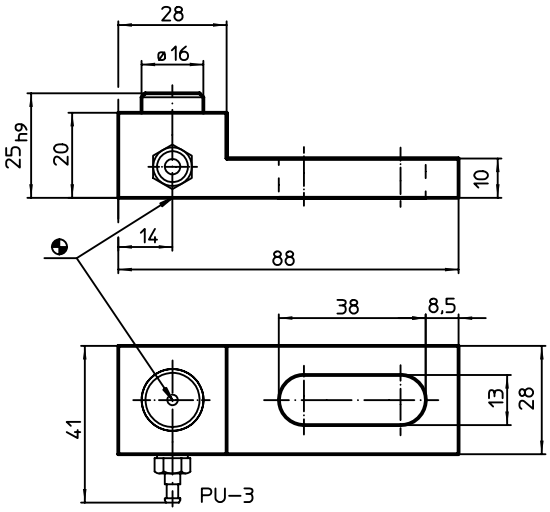

ORDER INFORMATION

[g]	Art. No.
with holding bar	
237	22800.0400

APPLICATION EXAMPLE

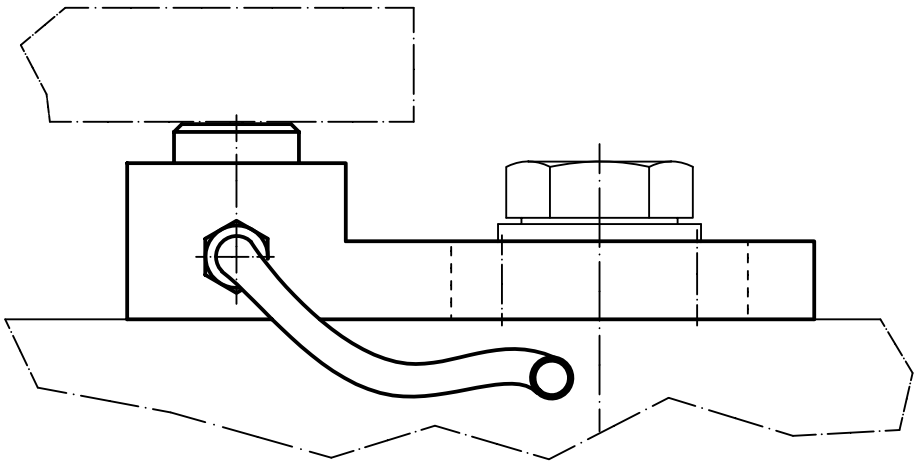

Positioning Sensors • self-aligning, pneumatic

EH 22800.

PRODUCT DESCRIPTION

Used in jigs and fixtures as positioning control for raw workpieces.
Contact control is achieved through compressed air backwash and is indicated on the monitoring unit.

Material

Ball
- Ball-bearing steel, hardened

Body
- Heat-treated steel, tempered, phosphated

MORE INFORMATION

Notes
Further information on request.

Further products
Monitoring Units for Positioning Sensors, pneumatic . . . . . → p. 333

DRAWING

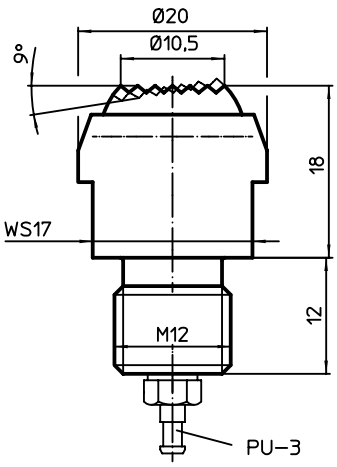

picture 1

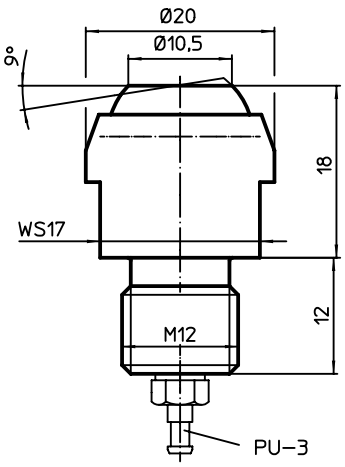

picture 2

ORDER INFORMATION

Load capacity for static load max. [kN]	[g]	Art. No.
flat-faced ball, ribbed surface		
15	42	22800.0220
flat-faced ball, plain surface		
15	42	22800.0320

APPLICATION EXAMPLE

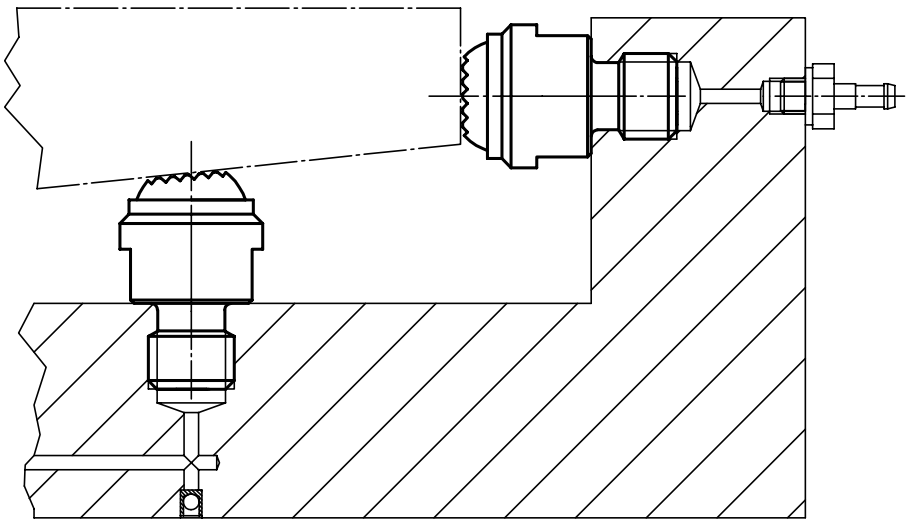

2

Positioning Sensors • self-aligning, pneumatic

EH 22800.

PRODUCT DESCRIPTION

Used in jigs and fixtures as positioning control for raw workpieces.
The response accuracy is constantly at 0,005 mm and can be achieved with a working pressure of 2,5 bar.
The system is monitored by the compressed-air backwash which indicated on the monitoring unit (Art. No. 22800.0612).

Material

Seal
- PVC

Supporting bar
- Steel, blackened

Ball
- Ball-bearing steel, hardened

Body
- Heat-treated steel, tempered, phosphated

Plug-in nipple
- Brass

MORE INFORMATION

Notes
Further information on request.

Further products
Monitoring Units for Positioning Sensors, pneumatic . . . . . → p. 333

DRAWING

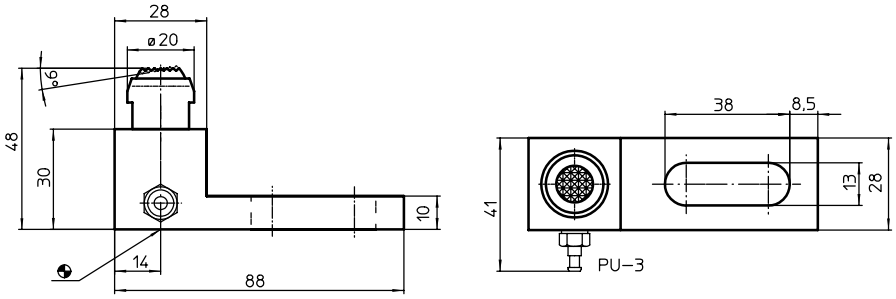

ORDER INFORMATION

Load capacity for static load max. [kN]	[g]	Art. No.
with holding bar		
15	321	22800.0410

APPLICATION EXAMPLE

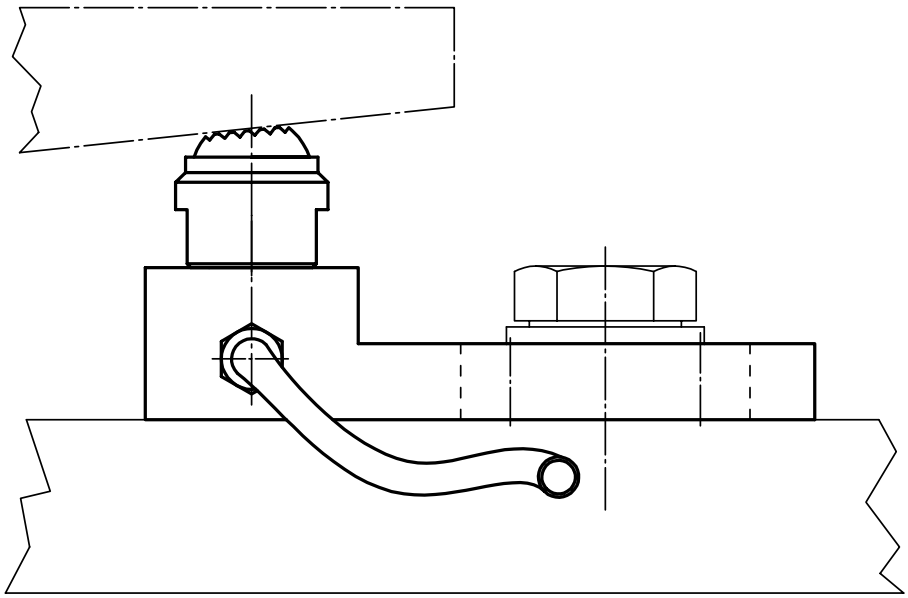

Monitoring Units for Positioning Sensors • pneumatic

EH 22800.

PRODUCT DESCRIPTION

The monitoring unit is used in combination with positioning sensors (EH 22800.).
Together with the positioning sensors, the backwash pressure sensor makes it possible to poll the correct workpiece positioning.

Material

Housing
- Plastic

MORE INFORMATION

Notes
Further information on request.

DRAWING

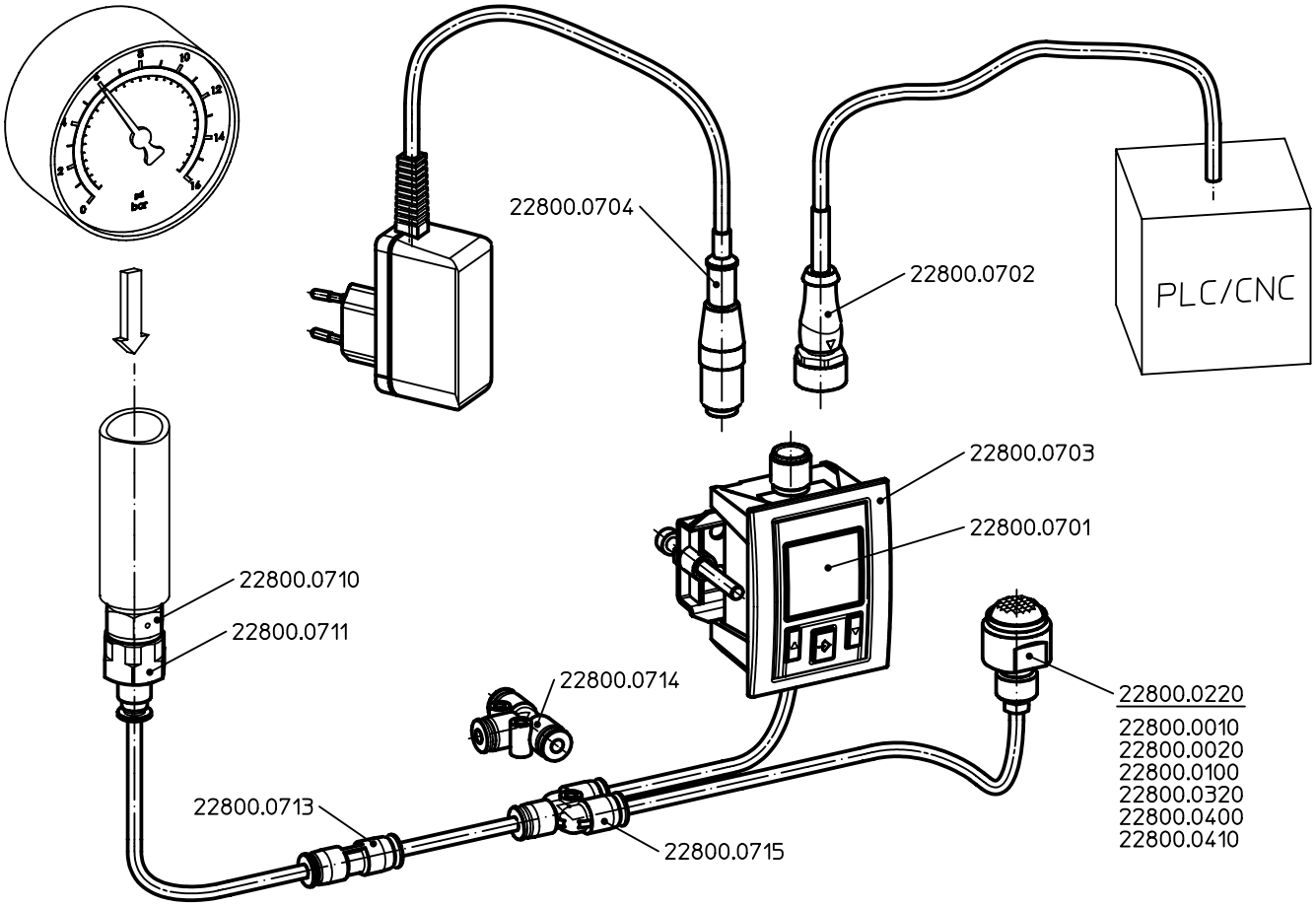

ORDER INFORMATION

Working pressure [bar]	[g]	Art. No.
backwash pressure sensor with LCD display, Ø 4 mm pneumatic hose connection, analogue and digital output signals		
0 – 10	167	**22800.0701**

2

ACCESSORIES

	L [mm]	D [mm]	[g]	Art. No.
circular connector cable for connecting backwash pressure sensor to control / bus system, M12 connection on free cable end (4-pin)				
	2000	–	84	22800.0702
installation frame for backwash pressure sensor, for installation into a control panel (max. wall thickness 5 mm)				
	–	–	26	22800.0703
plug-in power supply, input 100-240 V AC / output 24 V DC 500 mA, with M12 plug socket				
	1500	–	100	22800.0704
pressure regulator, max. input pressure 12 bar / output pressure 2 bar, 1/4" male thread two-sided				
	–	–	22	22800.0710
connection piece for connecting pressure regulator and pneumatic hose, 1/4" female thread on push-in connector (pneumatic hose Ø 4 mm)				
	–	–	17	22800.0711
pneumatic hose Ø 4 mm				
	5000	4	43	22800.0712
push-in connector, for pneumatic hose Ø 4 mm				
	–	–	5	22800.0713
T-push-in connector for pneumatic hose Ø 4 mm				
	–	–	8	22800.0714
Y-push-in connector for pneumatic hose Ø 4 mm				
	–	–	8	22800.0715

Polling Units

EH 22810.

The monitoring unit is used to verify the position of a workpiece. The unit can be easily installed and removed from a fixture in combination with other seating elements. A compact sensor checks whether a workpiece makes contact at specific positions.

The system can be extended to monitor multiple positions. The information is output via an electrical signal. The signal can be transmitted both via a hard-wired connection or via radio signal. The wireless connection requires an additional transceiver unit including antenna.

PRODUCT BENEFITS AT A GLANCE

- Improved process reliability
- Automatic workpiece monitoring
- Enhanced error detection
- Option to connect to a machine control
- Optional wireless monitoring

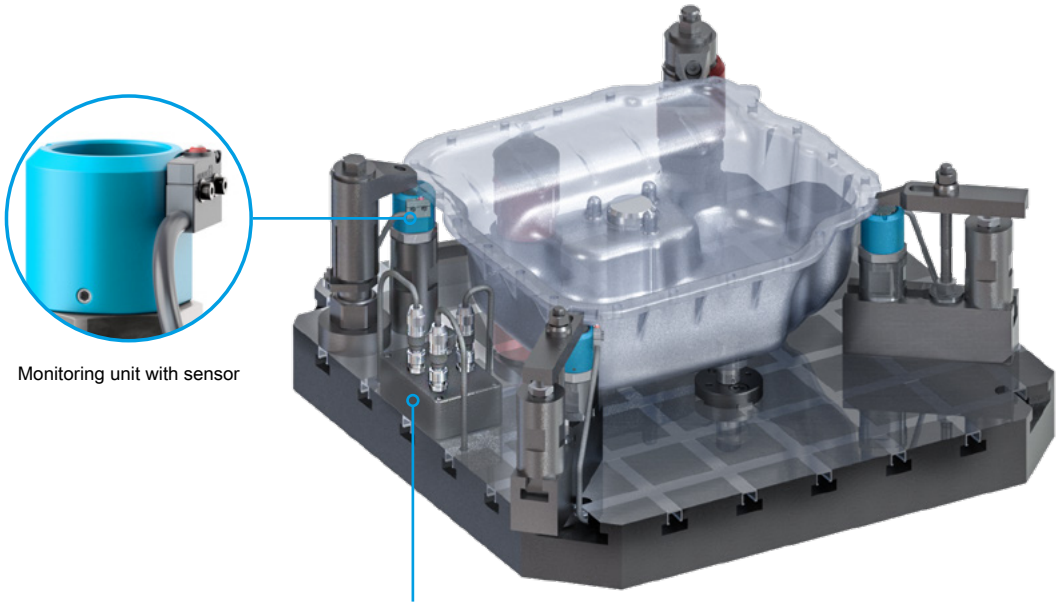

Wireless receiver (antenna + receiver)

You will find further information as well as your contact persons under: www.halder.com/MonitoringUnits

2

Polling Units • with sensor

EH 22810.

PRODUCT DESCRIPTION

For polling a workpiece on a seating element.
The polling unit is always built into a seating element as a single system. By means of a simple plug-in connection, it transmits whether a part is located at a specific position, as an electrical signal.
The polling unit can be used in combination with various seating elements. For example, the EH 22690. pins from the Halder standard parts are suitable.
Data is transferred via a cable connection. Optionally, the polling signal can be transferred by radio.
The interrogation unit meets the requirements of protection class IP6K7 (highly temperature-resistant and robust).

Material

Cable
- Silicone

Sensor
- Plastic, black

Plug
- Metal

Body
- Aluminium, blue anodised

Body
- Heat-treated steel, tempered, blackened

MORE INFORMATION

Notes
Further information on request.

DRAWING

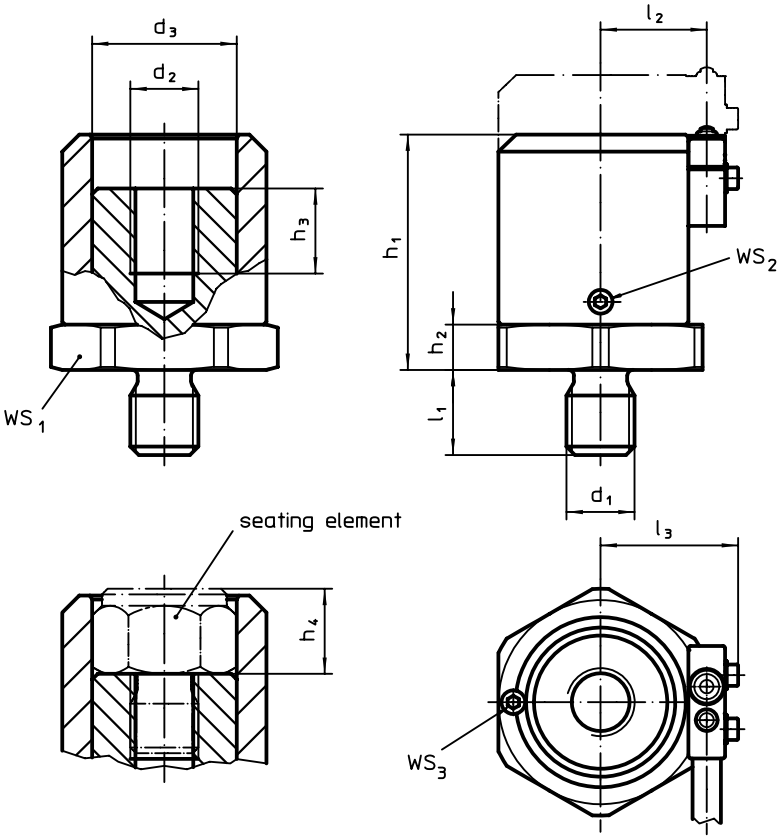

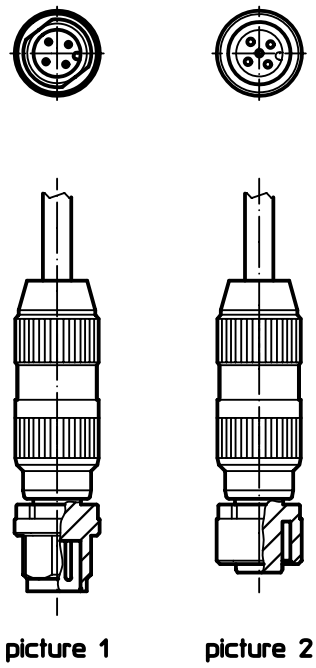

ORDER INFORMATION

Dimensions												WS						Art. No.
d_1	d_2	d_3	l_1	l_2	l_3	h_1 min.	h_1 max.	h_2	h_3	h_4 min.	h_4 max.	WS_1	WS_2	WS_3	min.	max.		
[mm]												[mm]			[°C]		[g]	
polling unit with bushing – picture 1																		
M 8	M 8	20,3	12	15,8	21,4	30,5	40,5	5	12	10	20,0	30	1,5	1,5	-25	85	180	22810.0008
M12	M12	25,5	15	18,7	24,3	41,5	59,0	8	15	10	27,5	36	2,0	2,0	-25	85	300	22810.0012
polling unit with plug – picture 2																		
M 8	M 8	20,3	12	15,8	21,4	30,5	40,5	5	12	10	20,0	30	1,5	1,5	-25	85	180	22810.1008
M12	M12	25,5	15	18,7	24,3	41,5	59,0	8	15	10	27,5	36	2,0	2,0	-25	85	300	22810.1012

ACCESSORIES

	[g]	Art. No.
sensor with bush and silicone cable		
	75	22810.9001
sensor with plug and silicone cable		
	75	22810.9002

2

Radio Transmitters • for polling unit

EH 22810.

PRODUCT DESCRIPTION

For cable-free transfer of the polled signal.
The radio transmitter is installed close to the polling unit, and is connected to the plug of the polling unit. The transmitter makes the polled signal available by radio, and does not require additional cable connection. Power is supplied by a battery.
The radio transmitter meets the requirements of protection class IP 67 (robust material) and is therefore suitable for use with cooling lubricants.
Frequency: 868.3 MHz (EU, Switzerland)
Other frequencies available on request.

MORE INFORMATION

Further information on request.

Notes

An AA battery (3.6 V) is included in the scope of delivery.

DRAWING

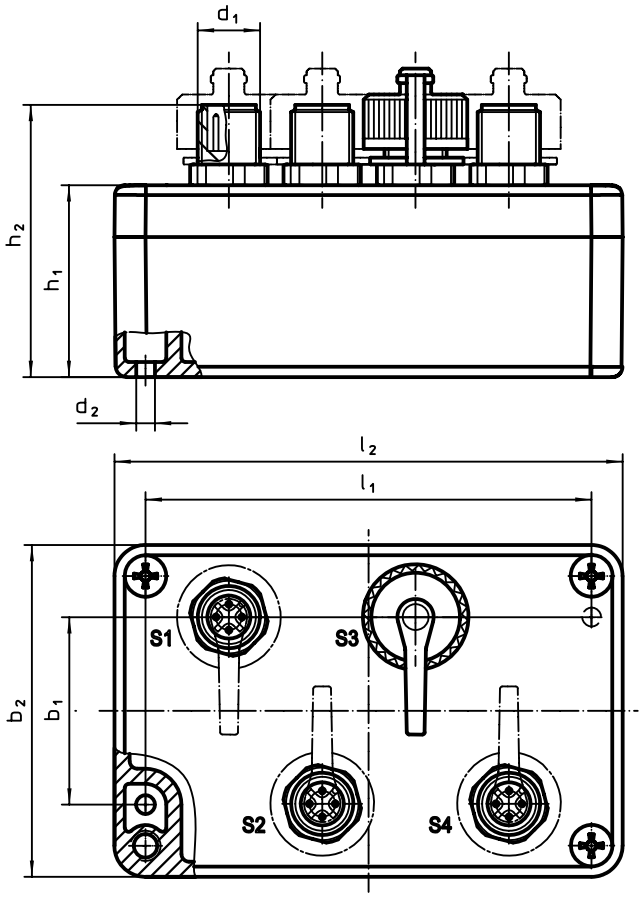

ORDER INFORMATION

[g]	Art. No.
universal radio transmitter with protective caps	
191	22810.9010

ACCESSORIES

	[g]	Art. No.
protection cap		
	4	22810.9011

Radio Receivers • for polling unit

EH 22810.

PRODUCT DESCRIPTION

For cable-free reception of the signal from the polling unit.
The antenna receives the radio signal from the polling unit, and transmits it via a cable connection to an input for the receiver. This activates the corresponding output (the make-contact). For each receiver, a maximum of four radio channels can be received.

MORE INFORMATION

Notes

Further information on request.

DRAWING

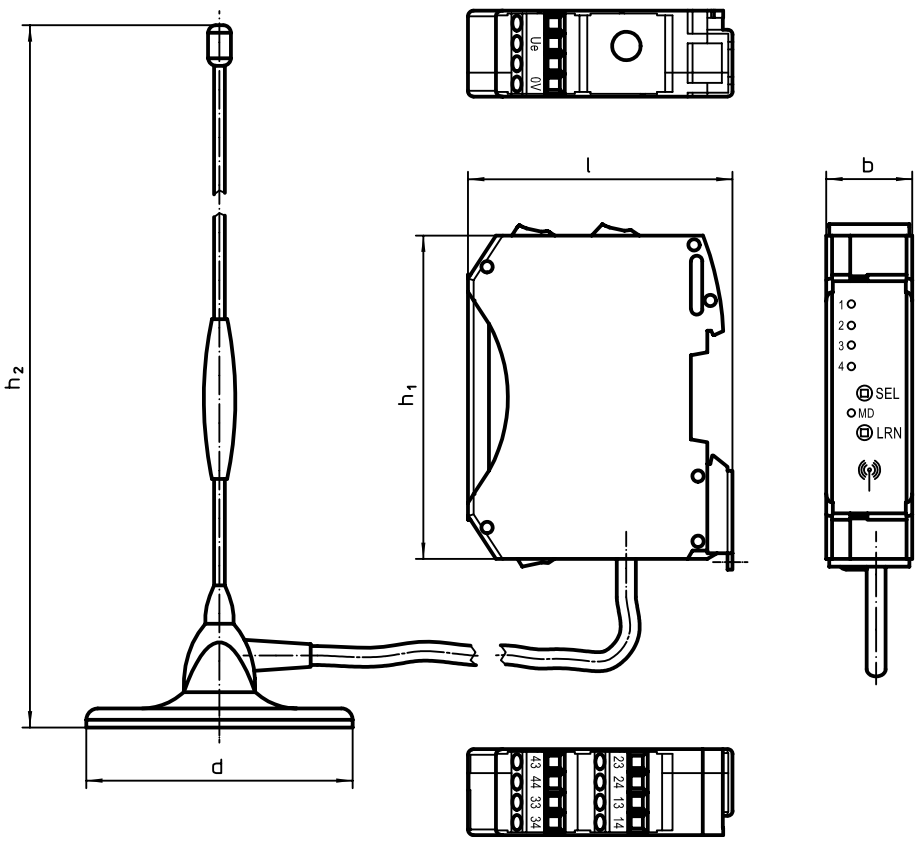

ORDER INFORMATION

[g]	Art. No.
universal radio receiver and radio antenna	
307	**22810.9020**

2

Oil-Sight Glasses

EH 22860.

PRODUCT DESCRIPTION

Oil-sight glasses can be used for level control in tanks without excess pressure.

Material

Seal ring
- Resistant to oil and gasoline

Reflector
- Plastic, white

Ring nut
- Aluminium Al

Oil-sight glass
- Plexiglass (PMMA, clear)

Assembly

Can be fitted without thread in H11 bore-hole. Sealing by simply tightening the ring nut.

DRAWING

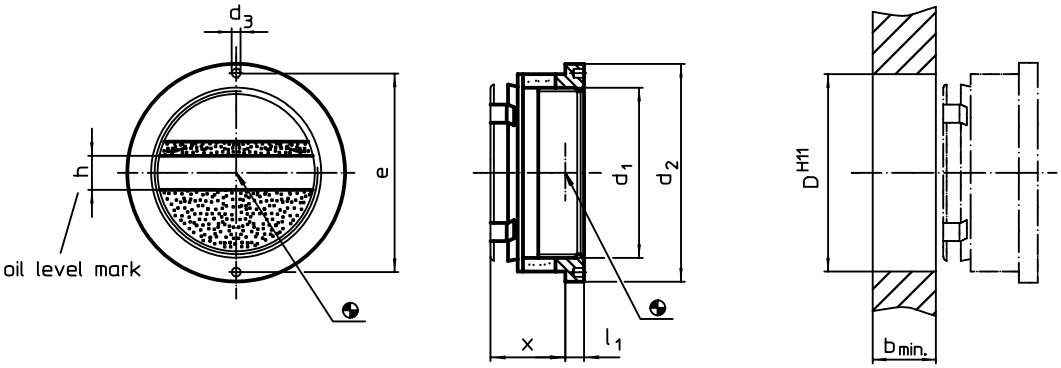

ORDER INFORMATION

Size (sight opening) d_1	Dimensions d_2	d_3	x ~	l_1	b min.	h	e	Location hole D H11	min.	max.		Art. No.
	[mm]							[mm]	[°C]		[g]	
without oil level mark												
16	25	2,2	15	3,5	9	–	21,0	20	-20	70	9,0	22860.0016
22	35	3,0	15	4,5	10	–	30,0	28	-20	70	18,0	22860.0022
32	45	3,0	18	5,5	12	–	40,0	38	-20	70	33,0	22860.0032
50	64	3,0	22	5,5	14	–	58,5	58	-20	70	87,0	22860.0050
with oil level mark												
16	25	2,2	15	3,5	9	5	21,0	20	-20	70	8,9	22860.0116
22	35	3,0	15	4,5	10	6	30,0	28	-20	70	18,0	22860.0122
32	45	3,0	18	5,5	12	8	40,0	38	-20	70	33,0	22860.0132
50	64	3,0	22	5,5	14	10	58,5	58	-20	70	86,0	22860.0150

ACCESSORIES

	Dimensions Size (sight opening) d_1	d h9	e		Art. No.
		[mm]		[g]	
assembly tool					
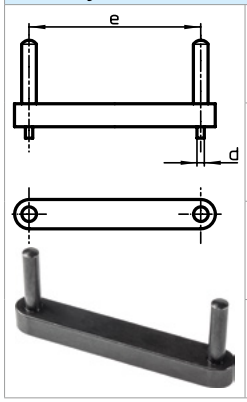	**16**	2,0	21,0	16	22860.0816
	22	2,8	30,0	30	22860.0822
	32	2,8	40,0	36	22860.0832
	50	2,8	58,5	49	22860.0850

Expander® Sealing Plugs • body from case-hardened steel

EH 22880.

PRODUCT DESCRIPTION

Expander® sealing plugs are used for safe, quick and economic sealing of bore holes in fluid technology, e.g. hydraulic drilling holes in jig and fixture construction. Assembly is effected by pressing in the sealing plug into the drilling hole by means of the prescribed setting die. **Please refer to the technical data following these product information pages.**

Material

Body

- Case-hardened steel, zinc-plated, thick-film passivated

Ball

- Roller bearing steel, heat-treated, tempered

MORE INFORMATION

Further products

Setting Dies, for Expander® sealing plug . . . . . → p. 343

DRAWING

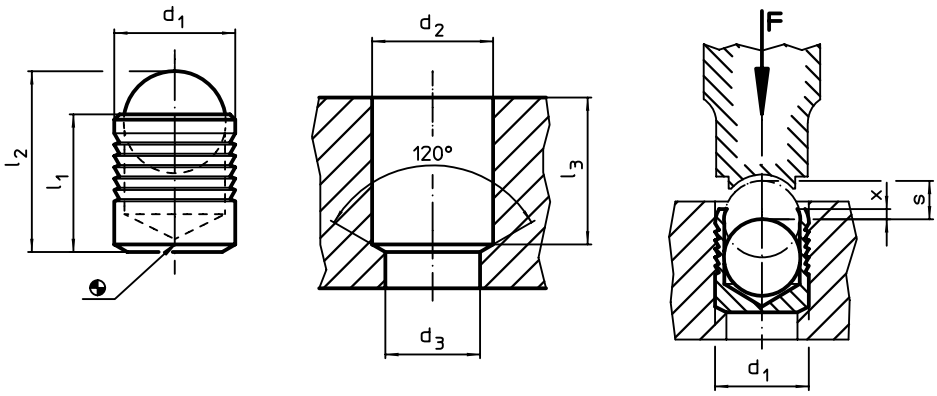

ORDER INFORMATION

Dimensions									Art. No.
d_1	l_1	l_2 ~	d_2 +0,1	d_3 max.	l_3 min.	x ±0,2	s	[g]	
[mm]									
4	4,0	5,2	4	3,3	3,8	0,2	1,50	0,46	22880.0004
5	5,5	7,0	5	4,3	5,3	0,4	2,00	0,78	22880.0005
6	6,5	8,6	6	5,3	6,3	0,4	2,50	1,30	22880.0006
7	7,5	10,1	7	6,4	7,3	0,4	3,00	2,00	22880.0007
8	8,5	11,7	8	7,4	8,3	0,3	3,50	2,80	22880.0008
9	10,0	13,7	9	8,4	9,8	0,4	4,00	4,20	22880.0009
10	11,0	15,2	10	9,4	10,8	0,4	4,50	6,10	22880.0010
12	13,0	18,0	12	10,6	12,8	0,4	5,50	9,60	22880.0012
14	15,0	20,8	14	12,7	14,5	0,4	6,35	15,00	22880.0014
16	17,0	23,7	16	14,7	16,5	0,6	7,00	22,00	22880.0016
18	19,0	26,3	18	16,7	18,5	0,6	8,00	32,00	22880.0018
20	22,0	30,5	20	18,7	21,5	0,8	9,00	44,00	22880.0020
22	25,0	34,2	22	20,7	24,5	0,8	10,00	58,00	22880.0022

Working and control pressures for Expander® sealing plug, sleeve from case hardened steel 1.0403							
basic material	ETG-100 AISI 1144	C15Pb 1.0403	GG-25 DIN 1691	GGG-50 DIN 1693	AlCuMg2 3.1354	AlMgSiPb 3.0615	G-AlSi7Mg 3.2371
d_1 4-10 mm	p [bar]						
	350	350	350	350	350	320	320
	pTest [bar]						
	1100	1100	1100	1100	1100	1000	1000
d_1 12-22 mm	p [bar]						
	280	280	280	280	280	250	250
	pTest [bar]						
	900	900	900	900	900	800	800

2

Expander® Sealing Plugs • body from stainless steel

EH 22880.

PRODUCT DESCRIPTION

Expander® sealing plugs are used for safe, quick and economic sealing of bore holes in fluid technology, e.g. hydraulic drilling holes in jig and fixture construction. Assembly is effected by pressing in the sealing plug into the drilling hole by means of the prescribed setting die. **Please refer to the technical data following these product information pages.**

Material

Body
- Stainless steel 1.4305

Ball
- Roller bearing steel, heat-treated, tempered

MORE INFORMATION

Further products

Setting Dies, for Expander® sealing plug . . . . . → p. 343

DRAWING

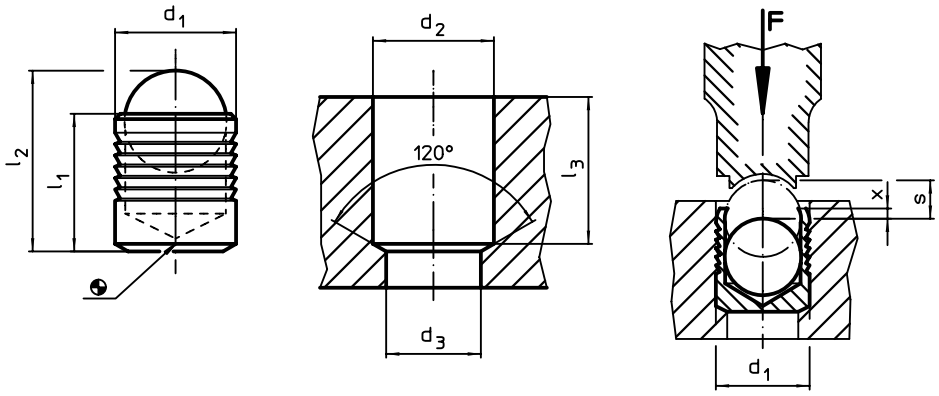

ORDER INFORMATION

Dimensions									Art. No.
d_1	l_1	l_2 ~	d_2 +0,1	d_3 max.	l_3 min.	x ±0,2	s	[g]	
[mm]									
3	3,6	4,6	3	2,2	3,4	0,4	1,20	0,17	22880.0053
4	4,0	5,2	4	3,3	3,8	0,2	1,50	0,34	22880.0054
5	5,5	7,0	5	4,3	5,3	0,4	2,00	0,70	22880.0055
6	6,5	8,6	6	5,3	6,3	0,4	2,50	1,30	22880.0056
7	7,5	10,1	7	6,4	7,3	0,4	3,00	2,40	22880.0057
8	8,5	11,7	8	7,4	8,3	0,3	3,50	3,20	22880.0058
9	10,0	13,7	9	8,4	9,8	0,4	4,00	4,50	22880.0059
10	11,0	15,2	10	9,4	10,8	0,4	4,50	6,10	22880.0060
12	13,0	18,0	12	10,6	12,8	0,4	5,50	9,70	22880.0062
14	15,0	20,8	14	12,7	14,5	0,4	6,35	15,00	22880.0064
16	17,0	23,7	16	14,7	16,5	0,6	7,00	22,00	22880.0066
18	19,0	26,3	18	16,7	18,5	0,6	8,00	31,00	22880.0068
20	22,0	30,5	20	18,7	21,5	0,8	9,00	46,00	22880.0070
22	25,0	34,2	22	20,7	24,5	0,8	10,00	58,00	22880.0072

→

Working and control pressures for Expander® sealing plug, sleeve from stainless steel 1.4305							
basic material	ETG-100 AISI 1144	C15Pb 1.0403	GG-25 DIN 1691	GGG-50 DIN 1693	AlCuMg2 3.1354	AlMgSiPb 3.0615	G-AlSi7Mg 3.2371
d_1 3-10 mm	p [bar]						
	450	450	450	450	450	380	380
	pTest [bar]						
	1400	1400	1400	1400	1400	1200	1200
d_1 12-22 mm	p [bar]						
	350	350	350	350	350	280	280
	pTest [bar]						
	1150	1150	1150	1150	1150	900	900

Setting Dies • for Expander® sealing plug

EH 22880.

PRODUCT DESCRIPTION

Expander® sealing plugs are used for safe, quick and economic sealing of bore holes in fluid technology, e.g. hydraulic drilling holes in jig and fixture construction. Assembly is effected by pressing in the sealing plug into the drilling hole by means of the prescribed setting die. **Please refer to the technical data following these product information pages.**

Material

- Tool steel, heat-treated

DRAWING

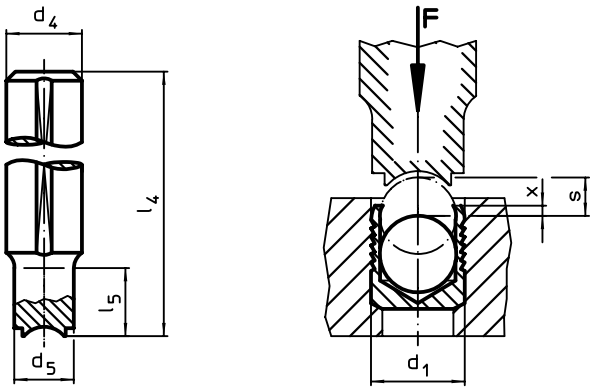

ORDER INFORMATION

Dimensions								Art. No.
d_1	d_4 h9	d_5	l_4	l_5	x ±0,2	s		
[mm]							[g]	
3	10	2,8	100	10	0,4	1,20	53	22880.0153
4	10	3,8	100	10	0,2	1,50	54	22880.0154
5	10	4,8	100	12	0,4	2,00	53	22880.0155
6	10	5,8	100	15	0,4	2,50	53	22880.0156
7	10	6,8	100	18	0,4	3,00	54	22880.0157
8	10	7,8	100	20	0,3	3,50	55	22880.0158
9	14	8,8	100	22	0,4	4,00	101	22880.0159
10	14	9,8	100	25	0,4	4,50	103	22880.0160
12	14	11,7	150	30	0,4	5,50	167	22880.0162
14	20	13,7	150	35	0,4	6,35	316	22880.0164
16	20	15,7	150	40	0,6	7,00	326	22880.0166
18	20	17,7	150	45	0,6	8,00	340	22880.0168
20	25	19,7	150	50	0,8	9,00	495	22880.0170
22	25	21,7	150	55	0,8	10,00	516	22880.0172

APPLICATION EXAMPLE

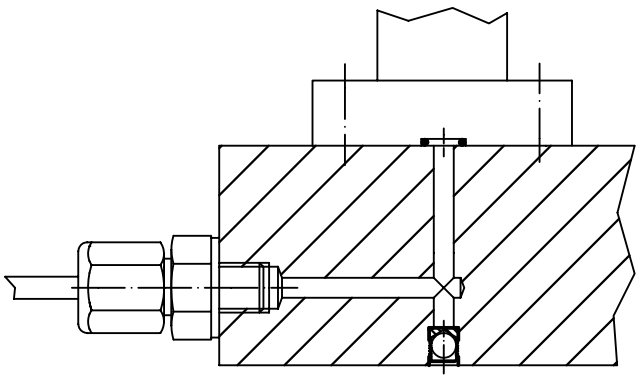

2

CONSTRUCTIONAL GUIDELINES, ASSEMBLY INSTRUCTIONS

COMPONENT REQUIREMENTS (22880.0004 - 22880.0072)

Drilling Holes

- The counterbore relation d_2/d_3 has to be according to the catalogue specification.
- Roundness tolerances have to be within t = 0,05 mm.
- With hard materials (see picture 1) the drilling roughness has to be R_z=10 to 30 µm.
- Drilling tolerance d_1= + 0,1 mm.
- Longitudinal rifles and spiral grooves have to be avoided as they have a negative influence on the sealing.
- **Drilling holes have to be kept absolutely free from oil, grease and chips.**

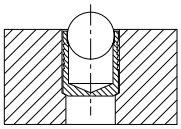

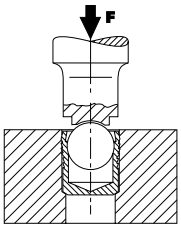

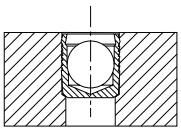

ASSEMBLY INSTRUCTIONS – MOUNTING PROCEDURE

- The Expander® Sealing Plug has to be inserted into the counterbore hole with the ball facing out. The upper sleeve edge mustnot protrude the working piece. Mounting dimensions given in the catalogue have to be considered.
- When having only a small or no counterbore hole at all the sleeve bottom has to be supported sufficiently.
- Press in the ball by means of a press or setting die until the upper crown is lying underneath the sleeve edge. Respective standard values for stroke s and dimension x can be seen from the table below.

Attention
For the assembly of Expander® Sealing Plugs, please use setting dies according to the catalogue specification.

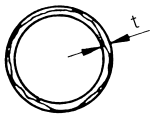

Roundness Tolerance
To achieve a secure functioning of the Expander® Sealing Plugs in respect to pressure effectiveness and sealing, a roundness tolerance of t = 0,05 mm has to be adhered to.

Drilling Tolerance
The drilling tolerance is + 0,1 mm.

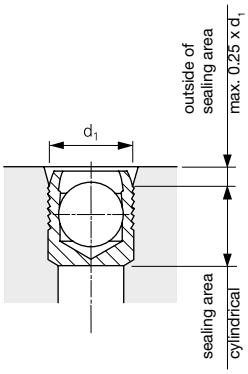

Drilling Concentricity
Within the active sealing area, the drilling hole has to be cylindrical.The drilling hole entrance may be conical up to 0,25 x d_1 as this zone does not have any primary influence on the sealing function.

Galvanic Corrosion
An eventual contact corrosion has to be considered.

DISASSEMBLY PROCESS

Thanks to their strength of approx. 45 HRC, the balls can be drilled out using a drill fitted with a hard-metal bit.

- Drill out Expander sealing plugs with diameters of up to Ø 6 mm to the next larger diameter directly in a single step.
- Use multiple steps to drill out Expander sealing plugs with diameters of Ø 6 mm or more to the next larger diameter.
- Clear the hole of chips or any left-over body remnants and clean the hole (oil-free and grease-free).

Important
Always insert the sealing plug with the next larger size following disassembly.

Please refer to the technical data following these product information pages.

Expander® Sealing Plugs • with pull-anchor

EH 22880.

PRODUCT DESCRIPTION

Expander® sealing plugs are used for safe, quick and economic sealing of bore holes in fluid technology, e.g. hydraulic drilling holes in jig and fixture construction. When using sealing plugs with pull-anchor, assembly is made by means of user friendly assembly devices. Body and pin are pre-assembled and suitable for automated processing.
Please refer to the technical data following these product information pages.

Material

Body
- Case hardened steel, annealed

Pin
- Steel

MORE INFORMATION

Further products

Assembly Tools, for Expander® sealing plugs with pull-anchor . . . . . → p. 348

DRAWING

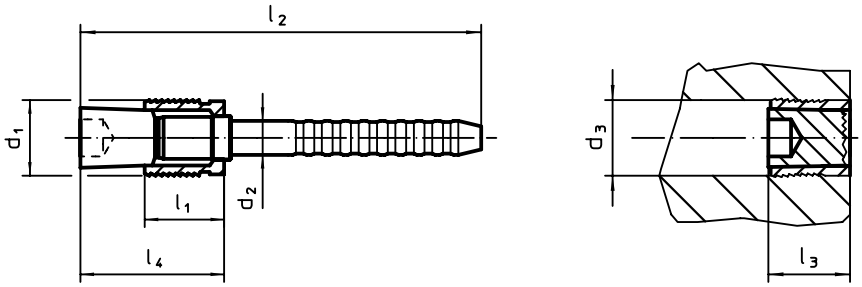

ORDER INFORMATION

Dimensions								Art. No.
d_1	d_2	d_3 +0,12 0	l_1	l_2	l_3 max.	l_4 max.		
[mm]							[g]	
4	2,50	4	4,5	39	6,5	9	2	22880.0404
5	3,00	5	5,5	41	7,5	10	3	22880.0405
6	3,40	6	6,5	43	8,0	12	4	22880.0406
7	4,10	7	7,5	38	9,0	14	5	22880.0407
8	4,20	8	8,5	40	10,5	15	6	22880.0408
9	4,50	9	9,5	43	11,0	17	8	22880.0409
10	4,75	10	10,5	45	12,5	19	10	22880.0410

APPLICATION EXAMPLE

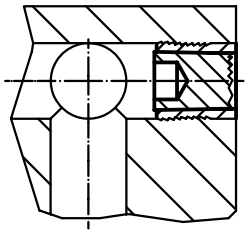

Working and control pressures for Expander® sealing plug with pull-anchor							
basic material	ETG-100 AISI 1144	C15Pb 1.0403	GG-25 DIN 1691	GGG-50 DIN 1693	AlCuMg2 3.1354	AlMgSiPb 3.0615	G-AlSi7Mg 3.2371
d_1 4-10 mm	p [bar]						
	500	500	500	500	500	450	450
	pTest [bar]						
	1600	1600	1600	1600	1600	1400	1400

2

Expander® Sealing Plugs • with elongated pull-anchor

EH 22880.

PRODUCT DESCRIPTION

Expander® sealing plugs are used for safe, quick and economic sealing of bore holes in fluid technology, e.g. hydraulic drilling holes in jig and fixture construction. When using sealing plugs with elongated pull-anchor, assembly is made by means of user friendly assembly devices.
Body and pin are pre-assembled and suitable for automated processing.
ATTENTION:
If Expander® sealing plugs with pull-anchor are applied to separate grooves, the admissible working pressure at the setting side has to be reduced by 50 %!
Please refer to the technical data following these product information pages.

Material

Body
- Case hardened steel, annealed

Pin
- Steel

MORE INFORMATION

Further products

Distance Bushings, for Expander® sealing plugs with elongated pull-anchor . . → p. 347
Assembly Tools, for Expander® sealing plugs with pull-anchor . . . . . → p. 348

DRAWING

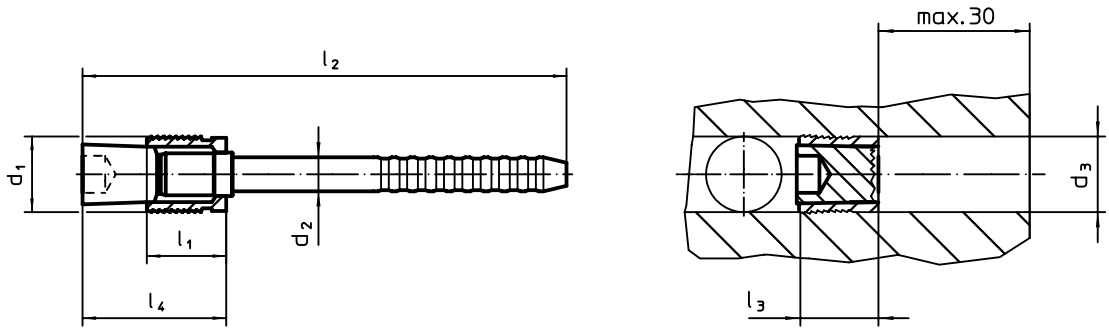

ORDER INFORMATION

Dimensions								Art. No.
d_1	d_2	d_3 +0,12 0	l_1	l_2	l_3 max.	l_4 max.		
[mm]							[g]	
4	2,50	4	4,5	69	6,5	9	3	22880.0414
5	3,00	5	5,5	71	7,5	10	4	22880.0415
6	3,40	6	6,5	73	8,0	12	6	22880.0416
7	4,10	7	7,5	68	9,0	14	8	22880.0417
8	4,20	8	8,5	70	10,5	15	10	22880.0418
9	4,50	9	9,5	73	11,0	17	12	22880.0419
10	4,75	10	10,5	75	12,5	19	15	22880.0420

Working and control pressures for Expander® sealing plug with elongated pull-anchor							
basic material	ETG-100 AISI 1144	C15Pb 1.0403	GG-25 DIN 1691	GGG-50 DIN 1693	AlCuMg2 3.1354	AlMgSiPb 3.0615	G-AlSi7Mg 3.2371
d_1 4-10 mm	p [bar]						
	500	500	500	500	500	450	450
	pTest [bar]						
	1600	1600	1600	1600	1600	1400	1400

Distance Bushings • for Expander® sealing plugs with elongated pull-anchor

EH 22880.

PRODUCT DESCRIPTION

To be used for Expander® sealing plugs with elongated pull-anchor.

Material

Body

- Case-hardened steel, case hardened

DRAWING

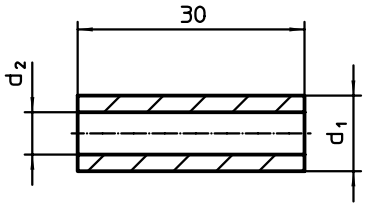

ORDER INFORMATION

Dimensions d_1 [mm]	d_2 [mm]	[g]	Art. No.
4	2,7	1,4	22880.0424
5	3,2	2,5	22880.0425
6	3,7	3,8	22880.0426
7	4,6	4,8	22880.0427
8	4,8	3,5	22880.0428
9	5,2	9,6	22880.0429
10	5,6	11,0	22880.0430

APPLICATION EXAMPLE

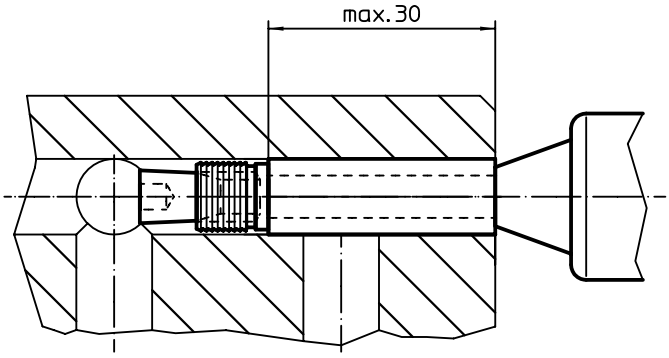

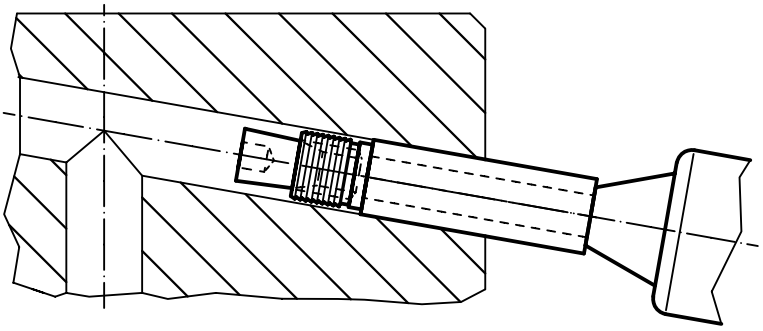

2

Assembly Tools • for Expander® sealing plugs with pull-anchor

EH 22880.

PRODUCT DESCRIPTION

Assembly tool for the safe and easy assembly of Expander® sealing plugs with pull-anchor/ elongated pull-anchor.

Technical details of the pneumatic assembly tools:

- Working pressure min. 5 bar / max. 7 bar
- Air volume required at 5.6 bar = 3.5 l
- Working noise < 75 dB(A)
- Cycle time 2 s

Attention: The scope of the delivery of the original equipment of both mechanical and pneumatic assembly tools includes the ram, the clamping jaws, and the housing for the clamping jaws.
Mechanical assembly tool: nozzles are also included in the original equipment. Pneumatic assembly tool: nozzles must be purchased separately.

Material

- On request

DRAWING

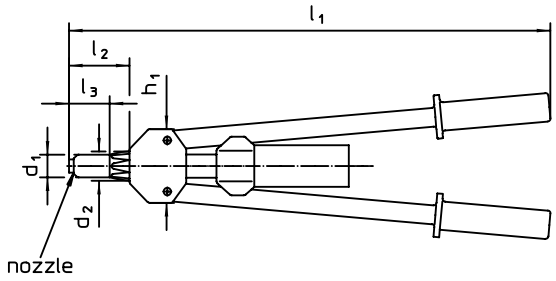

picture 1

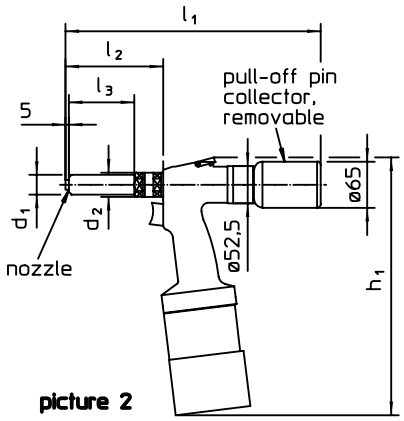

picture 2

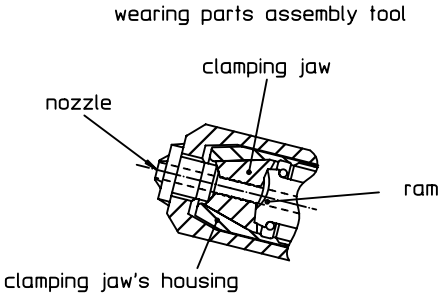

picture 3

ORDER INFORMATION

Tensile force [kN]	Stroke ~ [mm]	Dimensions d_1 ~ [mm]	d_2 ~	l_1 ~	l_2 ~	l_3 ~	h_1 ~	[g]	Art. No.
assembly tool, mechanically operated (KW-008), for sizes (d_1) 4 to 6 – picture 1									
–	–	24	31	525	59	38,0	80	1950	22880.0500
assembly tool, pneumatically operated (ExTool 030), for sizes (d_1) 4 to 6 – picture 2									
19 [at 7 bar]	25	23	26	353	133	73,5	356	2500	22880.0510
assembly tool, pneumatically operated (ExTool 040-1), for sizes (d_1) 7 to 10 – picture 2									
24 [at 7 bar]	18	28	34	353	133	92,0	356	3280	22880.0520

ACCESSORIES

	Description	Dimensions Nominal size d_1 [mm]	[g]	Art. No.
KW-008 (22880.0500)				
	nozzle – picture 3	**4**	8,6	**22880.0502**
		5	8,8	**22880.0503**
		6	9,2	**22880.0504**
	clamping jaw – picture 3	**–**	12,0	**22880.0551**
ExTool 030 (22880.0510)				
	nozzle – picture 3	**4**	9,0	**22880.0512**
		5	9,3	**22880.0513**
		6	9,5	**22880.0514**
	ram – picture 3	**–**	13,0	**22880.0560**
	clamping jaw – picture 3	**–**	10,0	**22880.0561**
	clamping jaw's housing – picture 3	**–**	39,0	**22880.0562**
ExTool 040-1 (22880.0520)				
	nozzle – picture 3	**7**	9,3	**22880.0525**
		8	11,0	**22880.0526**
		9	9,5	**22880.0527**
		10	9,6	**22880.0528**
	ram – picture 3	**–**	20,0	**22880.0570**
	clamping jaw – picture 3	**–**	8,4	**22880.0571**
	clamping jaw's housing – picture 3	**–**	41,0	**22880.0572**

2

CONSTRUCTIONAL GUIDELINES, ASSEMBLY INSTRUCTIONS

COMPONENT REQUIREMENTS (22880.0404 - 22880.0420):

Drilling Holes

- Roundness tolerances have to be within t = 0,05 mm.
- With hard materials the drilling roughness has to be R_z=10 to 30 µm.
- Drilling tolerance d_1= + 0,12 mm.
- Longitudinal rifles and spiral grooves have to be avoided as they have a negative influence on the sealing.
- **Drilling holes have to be kept absolutely free from oil, grease and chips.**

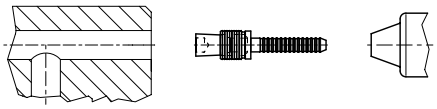

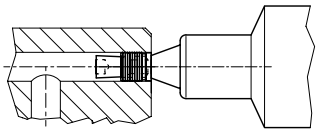

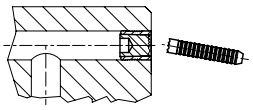

ASSEMBLY INSTRUCTIONS

Mounting Procedure

- The Expander® Sealing Plug with pull-anchor has to be flush mounted into the sleeve of the assembling tool.
- The Expander® Sealing Plug has to be mounted into the bore hole to be sealed. The assembly operation has to be activated until the pull-anchor breaks when having achieved the nominal breaking load.

Attention:

- The assembly of the Expander® Sealing Plug has to be effected only in a clean working environment.
- The anchor and sleeve of the Sealing Plug must neithe be cleaned nor greased.

Tools:

- For a failure-free assembly of the Expander® Sealing Plug the original tools and the appropriate equipment according to the technical data sheet are to be used.

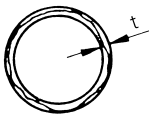

Roundness Tolerance

To achieve a secure functioning of the Expander® Sealing Plugs in respect to pressure effectiveness and sealing, a roundness tolerance of t = 0,05 mm has to be adhered to.

Drilling Tolerance

The drilling tolerance d_1 = + 0,12 mm with pull-anchor.

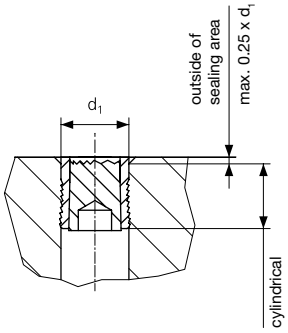

Drilling Conicity

Within the active sealing area, the drilling hole has to be cylindrical.The drilling hole entrance may be conical up to 0,25 x d_1 as this zone does not have any primary influence on the sealing function.

Galvanic Corrosion

An eventual contact corrosion has to be considered.

DISASSEMBLY PROCESS

For the Expander® Sealing Plug type with pull-anchor a disassembly is possible.

1. Strike back the anchor inside of the sleeve with the help of the punch.
2. Break out the sleeve and remove the struck anchor.
3. Redrill the bore hole to the Expander® Sealing Plug diameter next in size according to the standard sheet.
4. Clean the bore and free it from chips and possible leftovers of the sleeve (without oil and grease).
5. Insert new Expander® Sealing Plug (take care of point 3.).

Attention:
After the disassembly always insert the Expander® Sealing Plug diameter next in size!

Please refer to the technical data following these product information pages.

CONSTRUCTIONAL GUIDELINES, ASSEMBLY INSTRUCTIONS

WALL THICKNESSES / EDGE DISTANCES

Drilling Holes

The Expander® Sealing Plug is anchored to the basic material by radial expansion of the sleeve. Depending on the basic materials' characteristics forces resulting from this type of anchorage as well as the hydraulic pressures and temperature loads will necessitate minimum wall thicknesses and edge distances.

Distance to outer profile

straight

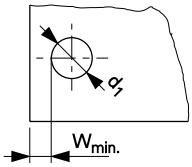

round

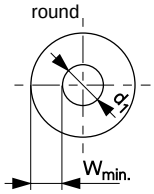

Wall Thickness

between drilled holes

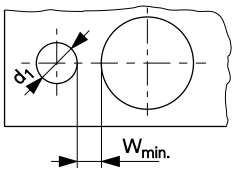

For standard values of minimum wall thicknesses and edge distances (W_{min}) refer to table.

Calculation of standard values

Diameter of the Expander® Sealing Plug: $d_1 \geq 4$ mm: $W_{min} = f_{min} \times d_1$

$d_1 < 4$ mm: $W_{min} = f_{min} \times d_1 + 0{,}5$

Description	ETG -100 AISI 1144	C 15 Pb 1.0403	GG - 25 DIN 1691	GGG - 50 DIN 1693	$AlCuMg_2$ 3.1354	AlMgSiPb 3.0615	G-AlSi7Mg 3.2371
Tensile strength Rm N/mm²	1000	560	250	500	480	340	300
Min. breaking elongation A5 / %	6	6	-	7	8	8	4
Average permanent elongation limit $R_{p\,0,2}$ N/mm²	865	300	-	320	380	300	250
Basic material				**Factor $f_{min.}$**			
Sleeve from stainless steel	**0,6**	**0,8**	**1,0**	**0,8**	**0,8**	**1,0**	**1,0**
Sleeve from steel	**0,5**	**0,6**	**1,0**	**0,6**	**0,6**	**1,0**	**1,0**
Type with pull-anchor	**0,5**	**0,6**	**1,0**	**0,6**	**0,6**	**1,0**	**1,0**

MOUNTING / ASSEMBLY FORCES

Expander® Sealing Plug sleeve from stainless steel Art. No. 22880.0053 to 22880.0072

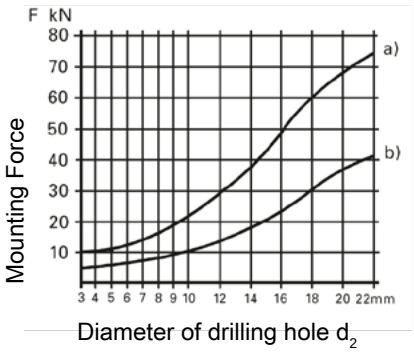

Measured in steel having a tensile strength of Rm = 1000 N/mm². When using basic materials with lower tensile strengths values are lower.

Expander® Sealing Plug sleeve from steel Art. No. 22880.0004 to 22880.0022

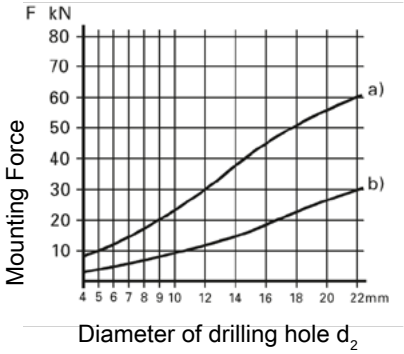

a) Force at min. drilling tolerance
b) Force at max. drilling tolerance

Expander® Sealing Plugs

EH 22880.

2

ANCHORAGE PRINCIPLE

There is a direct connection between the necessary drilling roughness required and both, the hardness and the tensile characteristics of the basic material. Depending on the mounting combination of sealing plug and basic material, anchorage can either take place via the rifle profile of the Expander® sleeve (automatic anchorage) or via the surface roughness of the drilling hole.

Attention:
Depending on the type of Expander® Sealing Plug and the hardness of the basic material a bore roughness of Rz = 10-30 µm has to be adhered to.

Expander® Sealing Plug
Art. No. 22880.0004 to 22880.0072
Requirements to achieve maximum operation reliability

- Drilling tolerance d_1 = + 0,10 mm,
- Consideration of counterbore hole relations,
- Roundness tolerance t = 0,05 mm,
- Longitudinal rifles and spiral grooves that may have a negative influence on the sealing effectiveness have to be avoided,
- Drilling holes have to be free from oil and grease.

Expander® Sealing, type with pull-anchor
Art. No. 22880.0404 to 22880.0420
Requirements to achieve maximum operation reliability

- Drilling tolerance d_1 = + 0,12 mm,
- Roundness tolerance t = 0,05 mm,
- Longitudinal rifles and spiral grooves that may have a negative influence on the sealing effectiveness have to be avoided,
- Drilling holes have to be free from oil and grease.

Note:
In case where an automatic anchorage is not possible when building in the Expander® Sealing Plug into a hard basic material a drilling roughness of > Rz= 10-30 µm is necessary to achieve the required pressure values. When having roughness > Rz = 30 µm, leakages may occur.

Expander® Sealing Plug

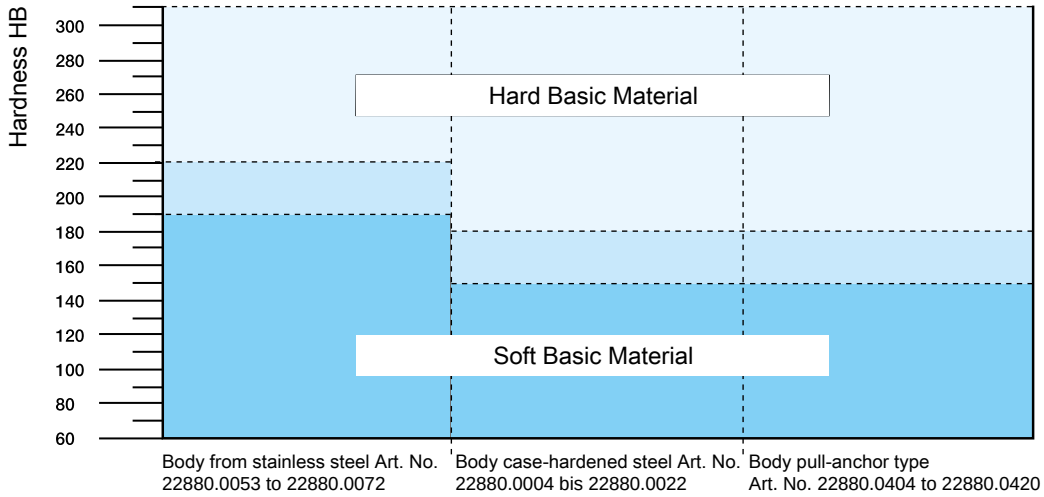

= For the allowed working pressures, the anchorage must be achieved via the drilling roughness. Roughness: Rz = 10-30 µm.

= Intermediate area: For the allowed working pressures anchorage has to be achieved via the drilling roughness of the basic material. Roughness: Rz = 10-30 µm.

= The anchorage within the drilling hole of the basic material will automatically be achieved via the rifle profile of the Expander® sealing plug (automatic anchorage).

Picture 1 Selection Diagram

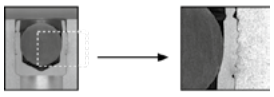

Picture. 2

Picture. 3

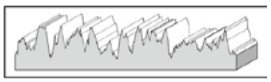

Picture. 4

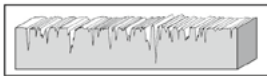

Picture. 5

Anchorage by Rifle Profile (Automatic Anchorage)
Example (Picture 2):
Expander® Sealing Plug made from case hardened steel HB = 180
in aluminium alloy HB = 90
Example (Picture 3):
Expander® Sealing Plug, pull-anchor type from case hardened steel HB = 180
in aluminium alloy HB = 90

Anchorage by Bore Roughness:
Required Roughness Design (Picture 4):An ideal bore roughness for the anchor can be achieved by using a twist drill or countersink.

Undesirable Roughness Design
Friction will cause a smooth roughness profile that is not desired.

Swing Bolts • DIN 444, form B

EH 22980.

PRODUCT DESCRIPTION

Swing bolts similar to DIN 444 however, steel design with higher quality 8.8. The stainless steel A2-50 design has a tensile strength of min. 500 N/mm².

Material

- Heat-treated steel, tempered, quality 8.8, black
- Stainless steel 1.4301

MORE INFORMATION

Notes

Special types on request.

References

For torques please refer to appendix - Technical Data -

Further products

Swing Bolts, DIN 444, form B, quality 8.8 high precision design. . . . . → p. 354

DRAWING

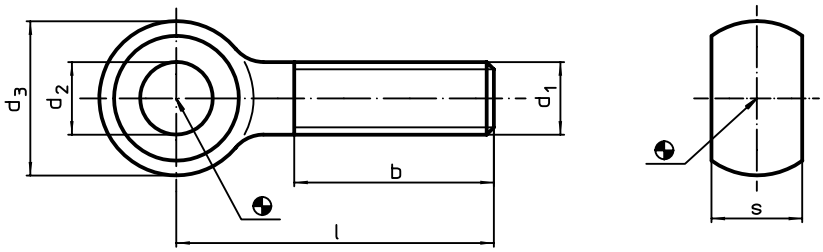

ORDER INFORMATION

d_1	l	d_2 H9	d_3	b	s		Art. No. heat-treated steel	Art. No. stainless steel
		Dimensions [mm]				[g]		
M 5	25	5	12	16	6	5,6	22980.0202	22980.0402
	30	5	12	16	6	6,4	22980.0203	22980.0403
	35	5	12	16	6	7,1	22980.0204	22980.0404
	40	5	12	16	6	7,9	22980.0205	22980.0405
M 6	30	6	14	18	7	9,5	22980.0212	22980.0412
	40	6	14	18	7	12,0	22980.0214	22980.0414
	50	6	14	18	7	14,0	22980.0216	22980.0416
	60	6	14	18	7	16,0	22980.0218	22980.0418
	80	6	14	18	7	20,0	22980.0222	22980.0422
M 8	40	8	18	22	9	22,0	22980.0232	22980.0432
	50	8	18	22	9	25,0	22980.0234	22980.0434
	60	8	18	22	9	29,0	22980.0236	22980.0436
	80	8	18	22	9	37,0	22980.0240	22980.0440
	100	8	18	22	9	44,0	22980.0244	22980.0444
M10	50	10	20	26	12	37,0	22980.0252	22980.0452
	60	10	20	26	12	43,0	22980.0254	22980.0454
	75	10	20	26	12	52,0	22980.0257	22980.0457
	100	10	20	26	12	67,0	22980.0262	22980.0462
	120	10	20	26	12	72,0	22980.0266	22980.0466
M12	50	12	25	30	14	59,0	22980.0272	22980.0472
	60	12	25	30	14	68,0	22980.0274	22980.0474
	80	12	25	30	14	85,0	22980.0278	22980.0478
	100	12	25	30	14	102,0	22980.0282	22980.0482
	120	12	25	30	14	119,0	22980.0286	22980.0486
M16	60	16	32	38	17	128,0	22980.0292	22980.0492
	80	16	32	38	17	158,0	22980.0294	22980.0494
	100	16	32	38	17	190,0	22980.0298	22980.0498
	120	16	32	38	17	220,0	22980.0302	22980.0502
	150	16	32	44	17	265,0	22980.0308	22980.0508
M20	100	18	40	46	22	329,0	22980.0312	22980.0512
	120	18	40	46	22	371,0	22980.0316	22980.0516
	160	18	40	52	22	466,0	22980.0324	22980.0524
	200	18	40	52	22	562,0	22980.0332	22980.0532
M24	100	22	45	54	25	442,0	22980.0342	22980.0542
	120	22	45	54	25	512,0	22980.0346	22980.0546
	160	22	45	60	25	649,0	22980.0354	22980.0554
	200	22	45	60	25	787,0	22980.0362	22980.0562

2

Swing Bolts • DIN 444, form B, quality 8.8 high precision design

EH 22980.

PRODUCT DESCRIPTION

The high precision design swing bolts exceed the DIN Version's quality. The thread is rolled - the shaft diameter is equal to the roll diameter. The surfaces -s- are machined.
Bore tolerance d_2 = H7.

Material

- Heat-treated steel, tempered, quality 8.8, black

MORE INFORMATION

References

For torques please refer to appendix - Technical Data -

Further products

Swing Bolts, DIN 444, form B . . . . . → p. 353

DRAWING

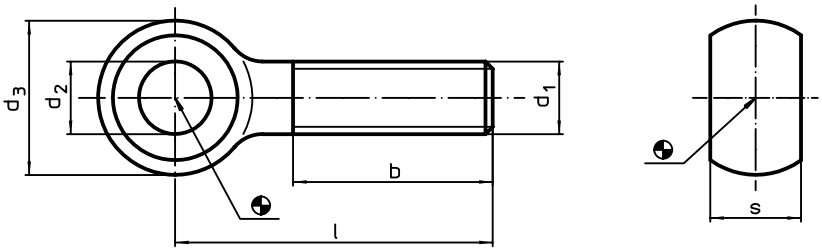

ORDER INFORMATION

d_1	l	d_2 H7	d_3	b	s -0,2		Art. No.
	Dimensions [mm]					[g]	
M 8	40	8	18	22	9	22	22980.0081
	60	8	18	22	9	28	22980.0084
M10	50	10	20	26	12	38	22980.0103
	75	10	20	26	12	50	22980.0106
	100	10	20	26	12	62	22980.0108
M12	60	12	25	30	14	70	22980.0122
	80	12	25	30	14	84	22980.0125
	120	12	25	30	14	113	22980.0128
M16	80	16	32	38	17	153	22980.0163
	150	16	32	44	17	245	22980.0168

APPLICATION EXAMPLE

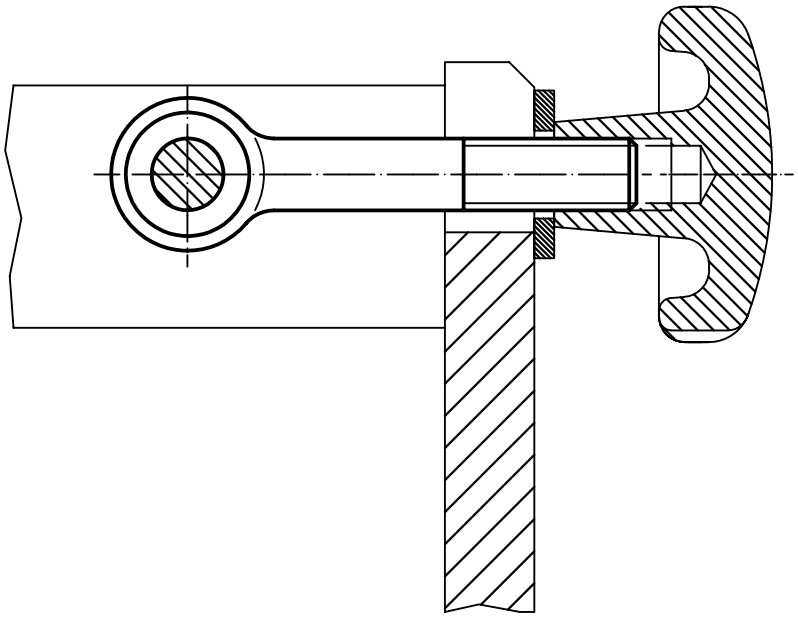

Rod Ends • DIN 12240-4, with male thread

EH 22982.

PRODUCT DESCRIPTION

Rod ends are suitable for universal use in applications subject to dynamic loads. As well as use in corrosion-risk areas, the design in stainless steel can also be used under higher dynamic loads.
Rod ends are used for bearings where movements between shaft and housing are necessary, and where the movements are not in a straight line.
Rod ends are ready-to-install elements manufactured to DIN ISO 12240-4 (dimension series K). The PTFE fabric inserted into the bearing shell means that the rod ends are maintenance-free.
Please take note of the technical information which follows these product pages.

Material

Body
- Free cutting steel, turned, zinc-plated
- Stainless steel 1.4057, forged, polished

Joint ball
- Roller bearing steel, hardened, ground, polished
- Stainless steel 1.4034, hardened, ground, polished

Bearing
- PTFE fabric

Bearing shell
- Free cutting steel, zinc-plated by galvanization
- Stainless steel 1.4571

DRAWING

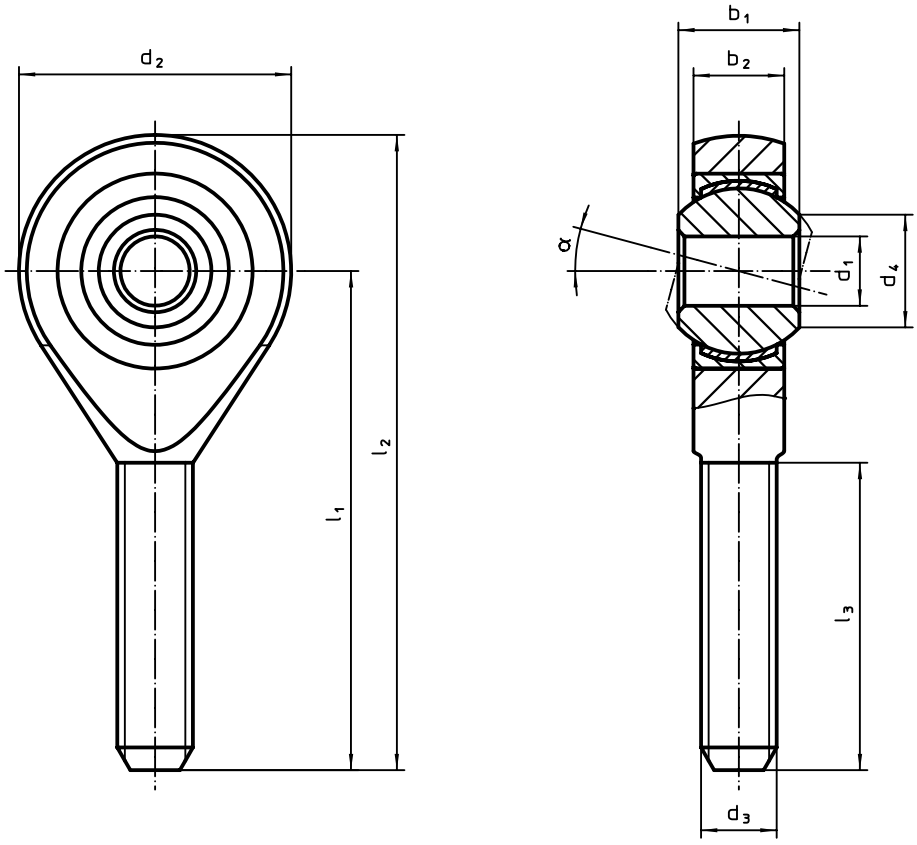

ORDER INFORMATION

Dimensions										Dynamic carrying figure C	Permitted rotational speed		Free cutting steel		Stainless steel	
d_1	l_1	b_1	b_2	d_2	d_3	d_4	l_2	l_3	α				static carrying figure C_0	Art. No.	static carrying figure C_0	Art. No.
[mm]										[kN]	[U/min]	[g]	[kN]		[kN]	
right hand thread																
5	**33**	8	6,00	18	M 5	7,7	42	19	13°	7,5	600	13	4,3	22982.0102	6,2	22982.0302
6	**36**	9	6,75	20	M 6	8,9	46	21	13°	9,3	530	20	6,0	22982.0104	8,8	22982.0304
8	**42**	12	9,00	24	M 8	10,4	54	25	14°	16,7	420	33	11,0	22982.0106	16,1	22982.0306
10	**48**	14	10,50	28	M10	12,9	62	28	13°	23,4	350	56	17,4	22982.0108	25,5	22982.0308
12	**54**	16	12,00	32	M12	15,4	70	32	13°	32,0	300	87	23,5	22982.0110	34,5	22982.0310
14	**60**	19	13,50	36	M14	16,8	78	38	16°	42,0	260	129	21,0	22982.0112	39,5	22982.0312

→

Dimensions										Dynamic carrying figure C	Permitted rotational speed		Free cutting steel		Stainless steel	
d_1	l_1	b_1	b_2	d_2	d_3	d_4	l_2	l_3	α				static carrying figure C_0	Art. No.	static carrying figure C_0	Art. No.
[mm]										[kN]	[U/min]	[g]	[kN]		[kN]	
16	**66**	21	15,00	42	M16	19,3	87	40	15°	52,5	230	189	32,0	22982.0114	60,5	22982.0314
18	**72**	23	16,50	46	M18 x 1,5	21,8	95	44	15°	64,0	210	267	38,5	22982.0116	73,0	22982.0316
20	**78**	25	18,00	50	M20 x 1,5	24,3	103	47	14°	78,0	190	348	44,0	22982.0118	83,0	22982.0318
22	**84**	28	20,00	54	M22 x 1,5	25,8	111	51	15°	97,0	170	443	53,0	22982.0120	100,0	22982.0320
25	**94**	31	22,00	60	M24 x 2	29,6	124	57	15°	122,0	150	600	61,0	22982.0122	118,0	22982.0322
left hand thread																
5	**33**	8	6,00	18	M 5	7,7	42	19	13°	7,5	600	13	4,3	22982.0124	6,2	22982.0324
6	**36**	9	6,75	20	M 6	8,9	46	21	13°	9,3	530	20	6,0	22982.0126	8,8	22982.0326
8	**42**	12	9,00	24	M 8	10,4	54	25	14°	16,7	420	33	11,0	22982.0128	16,1	22982.0328
10	**48**	14	10,50	28	M10	12,9	62	28	13°	23,4	350	56	17,4	22982.0130	25,5	22982.0330
12	**54**	16	12,00	32	M12	15,4	70	32	13°	32,0	300	87	23,5	22982.0132	34,5	22982.0332
14	**60**	19	13,50	36	M14	16,8	78	38	16°	42,0	260	129	21,0	22982.0134	39,5	22982.0334
16	**66**	21	15,00	42	M16	19,3	87	40	15°	52,5	230	189	32,0	22982.0136	60,5	22982.0336
18	**72**	23	16,50	46	M18 x 1,5	21,8	95	44	15°	64,0	210	267	38,5	22982.0138	73,0	22982.0338
20	**78**	25	18,00	50	M20 x 1,5	24,3	103	47	14°	78,0	190	348	44,0	22982.0140	83,0	22982.0340
22	**84**	28	20,00	54	M22 x 1,5	25,8	111	51	15°	97,0	170	443	53,0	22982.0142	100,0	22982.0342
25	**94**	31	22,00	60	M24 x 2	29,6	124	57	15°	122,0	150	600	61,0	22982.0144	118,0	22982.0344

Rod Ends • DIN 12240-4, with female thread

EH 22982.

PRODUCT DESCRIPTION

Rod ends are suitable for universal use in applications subject to dynamic loads. As well as use in corrosion-risk areas, the design in stainless steel can also be used under higher dynamic loads.
Rod ends are used for bearings where movements between shaft and housing are necessary, and where the movements are not in a straight line.
Rod ends are ready-to-install elements manufactured to DIN ISO 12240-4 (dimension series K). The PTFE fabric inserted into the bearing shell means that the rod ends are maintenance-free.
Please take note of the technical information which follows these product pages.

Material

Body
- Free cutting steel, turned, zinc-plated
- Stainless steel 1.4057, forged, polished

Joint ball
- Roller bearing steel, hardened, ground, polished
- Stainless steel 1.4034, hardened, ground, polished

Bearing
- PTFE fabric

Bearing shell
- Free cutting steel, zinc-plated by galvanization
- Stainless steel 1.4571

DRAWING

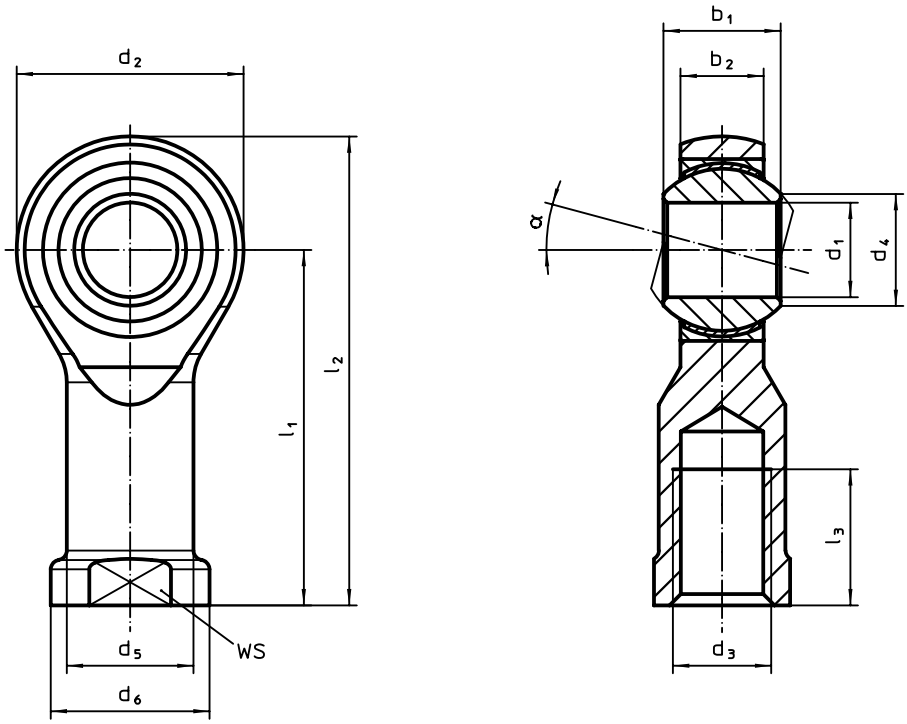

ORDER INFORMATION

Dimensions												Dynamic carrying figure C	Permitted rotational speed		Free cutting steel		Stainless steel	
d_1	l_1	b_1	b_2	d_2	d_3	d_4	d_5	d_6	l_2	l_3	α				static carrying figure C_0	Art. No.	static carrying figure C_0	Art. No.
[mm]												[kN]	[U/min]	[g]	[kN]		[kN]	
right hand thread																		
5	**27**	8	6,00	18	M 5	7,7	9,0	11	36	10	13°	7,5	600	18	8,0	22982.0202	11,8	22982.0402
6	**30**	9	6,75	20	M 6	8,9	10,0	13	40	12	13°	9,3	530	27	8,9	22982.0204	13,1	22982.0404
8	**36**	12	9,00	24	M 8	10,4	12,5	16	48	16	14°	16,7	420	46	14,1	22982.0206	20,7	22982.0406
10	**43**	14	10,50	28	M10	12,9	15,0	19	57	20	13°	23,4	350	76	19,3	22982.0208	28,3	22982.0408
12	**50**	16	12,00	32	M12	15,4	17,5	22	66	22	13°	32,0	300	115	23,5	22982.0210	34,5	22982.0410
14	**57**	19	13,50	36	M14	16,8	20,0	25	75	25	16°	42,0	260	170	21,0	22982.0212	39,5	22982.0412

→

Dimensions												Dynamic carrying figure C	Permitted rotational speed		Free cutting steel		Stainless steel	
d_1	l_1	b_1	b_2	d_2	d_3	d_4	d_5	d_6	l_2	l_3	α				static carrying figure C_0	Art. No.	static carrying figure C_0	Art. No.
[mm]												[kN]	[U/min]	[g]	[kN]		[kN]	
16	**64**	21	15,00	42	M16	19,3	22,0	27	85	28	15°	52,5	230	230	32,0	22982.0214	60,5	22982.0414
18	**71**	23	16,50	46	M18 x 1,5	21,8	25,0	31	94	32	15°	64,0	210	320	38,5	22982.0216	73,0	22982.0416
20	**77**	25	18,00	50	M20 x 1,5	24,3	27,5	34	102	33	14°	78,0	190	415	44,0	22982.0218	83,0	22982.0418
22	**84**	28	20,00	54	M22 x 1,5	25,8	30,0	37	111	37	15°	97,0	170	540	53,0	22982.0220	100,0	22982.0420
25	**94**	31	22,00	60	M24 x 2	29,6	33,5	42	124	42	15°	122,0	150	750	62,0	22982.0222	118,0	22982.0422
left hand thread																		
5	**27**	8	6,00	18	M 5	7,7	9,0	11	36	10	13°	7,5	600	18	8,0	22982.0224	11,8	22982.0424
6	**30**	9	6,75	20	M 6	8,9	10,0	13	40	12	13°	9,3	530	27	8,9	22982.0226	13,1	22982.0426
8	**36**	12	9,00	24	M 8	10,4	12,5	16	48	16	14°	16,7	420	46	14,1	22982.0228	20,7	22982.0428
10	**43**	14	10,50	28	M10	12,9	15,0	19	57	20	13°	23,4	350	76	19,3	22982.0230	28,3	22982.0430
12	**50**	16	12,00	32	M12	15,4	17,5	22	66	22	13°	32,0	300	115	23,5	22982.0232	34,5	22982.0432
14	**57**	19	13,50	36	M14	16,8	20,0	25	75	25	16°	42,0	260	170	21,0	22982.0234	39,5	22982.0434
16	**64**	21	15,00	42	M16	19,3	22,0	27	85	28	15°	52,5	230	230	32,0	22982.0236	60,5	22982.0436
18	**71**	23	16,50	46	M18 x 1,5	21,8	25,0	31	94	32	15°	64,0	210	320	38,5	22982.0238	73,0	22982.0438
20	**77**	25	18,00	50	M20 x 1,5	24,3	27,5	34	102	33	14°	78,0	190	415	44,0	22982.0240	83,0	22982.0440
22	**84**	28	20,00	54	M22 x 1,5	25,8	30,0	37	111	37	15°	97,0	170	540	53,0	22982.0242	100,0	22982.0442
25	**94**	31	22,00	60	M24 x 2	29,6	33,5	42	124	42	15°	122,0	150	750	62,0	22982.0244	118,0	22982.0444

Rod Ends

EH 22982.

TECHNICAL DATA

RADIAL PLAY

Radial bearing play is a measure taken at room temperature and used to determine the degree by which the inner ring can be shifted relative to the outer ring in radial direction from one end position to the opposite end position.

	Radial play [mm]	
d_1	min.	max
5	0,005	0,030
6	0,005	0,030
8	0,005	0,030
10	0,005	0,030
12	0,005	0,035
14	0,005	0,035
16	0,005	0,035
18	0,005	0,035
20	0,005	0,045
22	0,005	0,045
25	0,005	0,045

TEMPERATURE RANGE FOR USE

The temperature range for use is -50°C to 150°C.

CARRYING FIGURES

Carrying figures are properties that are bearing-specific and derived from the material data of the material used. They are used as an aid to select rod ends. Increasing or alternating loads require that the dynamic bearing capacity of the rod end housing be considered separately.

STATIC CARRYING FIGURE C_0

C_0 identifies the permissible radial load at standstill and with the load at rest which a rod end is capable of withstanding at the weakest cross section without deforming. The specified C_0 values are determined by way of calculation based on the respective material properties and verified by subjecting a representative quantity of rod ends to a tensile test at room temperature: each test was assuming 80% utilization of the yield strength, incorporating a 1.25 margin of safety.

The static carrying figure C_0 also serves as a means to calculate the permissible axial load, which is limited by additional bending stresses occurring at the rod shaft, but, primarily, by the axial attachment of the inner part.

Push-out tests were used to establish the maximum axial force.

$F_a = 0{,}4 \times C_0$

RADIAL AND AXIAL FORCES

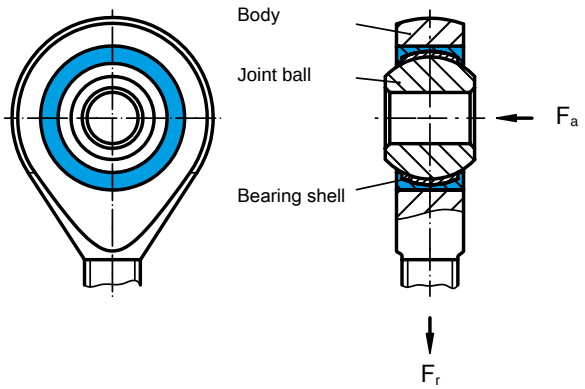

DYNAMIC FIGURE C

The specified dynamic carrying figures form the basis for the calculation of the service life rod ends will be able to enjoy when subjected to dynamic stresses, i.e. loads exerted by swinging or tipping. However, these figures merely refer to the bearing and can therefore not be applied to the rod end housing.

LUBRICATION

Maintenance-free rod ends must not be re-lubricated. The inner ring slides on a PTFE fabric embedded in the bearing shell.

TILT ANGLE
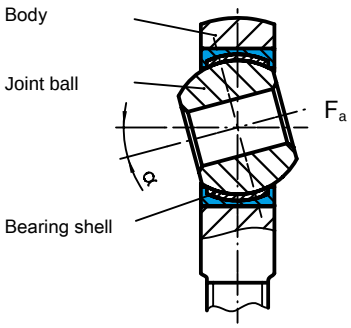
The tilt angle varies with every version. You will find the corresponding values in the product data table.